AGRICULTURAL TECHNOLOGY

GRADE 10

basic education
Department:
Basic Education
REPUBLIC OF SOUTH AFRICA

AGRICULTURAL TECHNOLOGY

GRADE 10

TERM 1

Week 4 hours	Topic	Content
1	PAT Design portfolio	First part of PAT must be handed out to the learners. Learners are given three weeks to complete the design portfolio.
1	Research task	The research task must be handed out in the first week of the term and learners must be finished at the end of the first term.
1	Safety	OHS Act: Introduction to the OHS Act: Familiarize the learners with relevant workshop practices and regulations applicable to the farm workshop so that they can conduct themselves appropriately in the workshop. Protective clothing Ear protection Eye protection
2	Safety	General Workshop rules: Safety when working on or under a motor vehicle in the workshop Injuries in the workshop (Cuts, bruises, eye injuries, burns and bone fractures)
3	Safety	Electrical safety: General electrical safety rules Situations that can cause electrical shock to workers Actions that should be taken to secure the person that has sustained an electrical shock Reduce the risk of electrical injury with overhead power lines Reduce the risk of contact with overhead power lines
4	PAT Manufacturing process	Learners must start with the manufacturing of the PAT project/product. (Four half hour periods must be allocated for this per cycle/week)
4	Safety	Fire prevention: Fire prevention rules Discovering a fire Emergency evacuation Fire Extinguishers How to use a fire extinguisher When to use a fire extinguisher Types of fire extinguishers Fire extinguishing chart
5	Safety	Basic General Safety Regulations: Safe handling and safety regulations applicable to all workshop equipment, farm equipment as well as skills and construction processes must be dealt with through the content during the year.

6	Structural materials	Metals: Ferrous metals: Mild steel: Identification and uses of mild steel products: (beams, purlines, square tubing, square bar, lip channel, angle iron, round tubing, round bar) Corrosion: Types of corrosion and protection against corrosion Different methods of treating metals: Hardening Softening of steel Tempering Annealing Case hardening
7	Structural materials	Timber: Timber used on the farm: Uses and properties Pine Wattle Blue gum Poplar Meranti Protection of timber products: Timber Posts/poles Beams Timber doors: Types, construction and uses Ledged door Ledged and braced door Ledged and braced batten door
8	Structural materials	Building: Basic components of a concrete mixture Cement Sand Stone/Aggregate Water Cement bricks Building mixtures: Concrete, mortar and screed

9	Structural materials	Fencing: Types of wire, fences and netting: Sheep, Cattle, Game Types of wire strands : Barb wire, binding wire, galvanized steel wire Type of wire netting : Bonnox, Jackal proof, chicken mesh
10	Structural materials	Components of a fence: Posts: types and uses Droppers: types and uses Anchors and supports: types, uses and basic sketching Gates: Placing, erecting and basic sketches
	Test 1	Learners must write a formal test during the end of this term not shorter than 100 marks with a time allocation of 2 hours.
Formal Assessment Term 1: Test 1 75% Research task 25% PAT (Design) 25% of PAT (The PAT marks must be used at the end of the year for the final PAT mark.)		Research Task: Term 1: One of the following: The teacher can also use his/her own topics: Communication systems and sources of agricultural information Different types of hazardous substances used in the Agricultural sector; warning and information symbols, related and storage regulations and safety regulations regarding handling Types of irrigation equipment Types of fences for different purposes Fire control systems and equipment Types of primary cultivating tools

TERM 2

Week 4 hours	Topic	Content
	Practical task 1	The teacher must do ONE practical task with the learners during this term.
1	Energy	Electrical Energy: 12 Volt DC current Basic principles of electrical energy: Current, amperes, resistance and potential difference Standard symbols and units as applicable to DC circuits. Basic calculations
2	Energy	Basic components in a basic electrical ignition system of a motor vehicle: Working, function and problem solving Battery Ignition coil Distributor Spark plug Ignition timing

3	Energy	Basic components of the electrical circuit of a motor vehicle Fuses Lights Wires Trailer coupling plug for vehicles (Male and female plugs)
4-5	Construction processes	Arc welding: Safety Protective clothing Hazards associated with arc welding Arc welding machine. Basic construction, and working Arc welding electrodes Basic arc welding principles Welding defects
6	Construction processes	Soft soldering: Application and methods Equipment used Types of solders Fluxes Safety
7	Construction processes	Hard soldering: Brazing Application and method Equipment used. Type of welding rod Fluxes Safety
8-10	Midyear examination	Learners must write an exam paper not shorter than 150 marks at the end of this term. Time allocation must be 2 hours.
Formal Assessment Term 2: Midyear exam 75% Practical Task 1 25%		Practical task 1: Term 2: The following are given as examples of which only ONE must be done: The teacher can also use his/her own practical task: Fire prevention drill Examine the effects of corrosion on mild steel

TERM 3

Week 4 hours	Topic	Content
	Practical task 2	The teacher must do ONE practical task with the learners during this term.
1-3	Tools and equipment	Tools, Equipment, Implements and Mechanized systems: Basic hand tools used in workshop: Saws: Hack saw; junior saw Hammers: ball pane; soft face; rubber Punches: Centre; flat nose Cold chisels: Flat; cross-cut; round nose Screw drivers: Star (Philips); Flat point Pliers: combination; long nose; round nose; vice grip; water pump Drills: Hand Drill bits and reamers: Iron, wood and concrete Measuring and marking: Squares; scribers; chalk; measuring tape; venire; caliper; micrometer; combination set Files: Profiles Tin snips: Various types Riveting: Pop riveting; rivets Spanners: Ring; combination; open end; socket; pipe wrench; shifting Allen keys: Function
4-5	Tools and equipment	Horticulture cultivation tools: Identification, function Garden tools: Spade, fork, rake Power tools: Lawn mower, brush cutter Animal drawn implements: Plough, planter Basic primary cultivation implements: Parts, function and maintenance Plough Ripper Disk Offset Wonder tiller Disk plough
6-10	Tools and equipment	Engines: Working, construction and components. 2-Stroke, 4-stroke petrol and diesel Service of engines: Ignition, cooling, lubrication, braking, oil- air cleaning Vehicle components/parts Engine systems: Lubrication and temperature control of engines

	Test 2	Learners must write a formal test during the end of this term not shorter than 100 marks with a time allocation of 2 hours.
Formal Assessment Term 3 Test 2 75% Practical Task 2 25%		Practical Task 2: Term 3: The following are given as examples: Do ONE: The teacher can also set his/her own practical task: Fire prevention drill Examine the effects of corrosion on mild steel

TERM 4

Week 4 hours	Topic	Content
	PAT	PAT must be finished in this term. Marks must be awarded according to the guidelines provided for the final product.
1	Irrigation and water supply	Basic water pumping methods: Working, construction and components Windmill Water tower Power head
2-3	Irrigation and water supply	Micro irrigation systems: Working, construction and components Micro spray irrigation Drip irrigation
4	Irrigation and water supply	Water supply to animals: Construction and safety principles Troughs Valves Connection pipes Reservoirs
5	Communication	Information sources: printed media (magazines/brochures) electronic media (TV/radio/Internet) organised agricultural societies farmer days agricultural shows.
6	Drawings	Drawings: Basic freehand sketches and drawings: Lines (hidden, dash and dotted) Labelling and numbering Introduction to basic scale drawings

7	Measurements, calculations and calibrations	Measurements, calculations and calibrations: (Refer to PAT and simulations) different measurements and related units (Meter, centimetre and millimetre) basic expenditure calculations in projects (Cost calculations) calibration of hand tools and equipment used (Feeler gauge)
8-10	End of year examinations	Learners must write an examination paper of 200 marks with a time allocation of 3 hours.
Formal Assessment for Term 4 Final Exam 50%		Term 4: Promotion mark SBA: Term 1 100 Term 2 100 Term 3 100 Total 300÷12=25 PAT: Design 25 Construction process 50 Final Product 25 Total 100÷4=25 EXAM: Total 200÷4=50
PAT 25% (Design 25%) (Construction process 50%) (Final product 25%)		
		Final mark: 100

CHAPTER 1

SAFETY

1. **OHS Act**. Introduction to the Occupation, Health and Safety Act.

   Familiarize the learners with relevant workshop practices and regulations applicable to the farm workshop.

   Taking into account the nature of the hazard that is to be countered, and without derogating from the general duties imposed on employers and users of machinery by subregulations (1) and (2), the safety equipment and facilities contemplated in subregulation (2) shall include, as may be necessary --

   a. *suitable goggles, spectacles, face shields, welding shields, visors, hard hats, protective helmets, caps, gloves, gauntlets, aprons, jackets, capes, sleeves, leggings, spats, gaiters, protective footwear, protective overalls, or any similar safety equipment or facility of a type that will effectively prevent bodily injury;*
   b. *waterproof clothing, high-visibility clothing, chemical-resistant clothing, low temperature clothing, chain mail garments, waders, fire retardant or flame-proof clothing, ice-jackets, or any similar safety equipment of a type that will effectively protect the wearer thereof against harm;*
   c. *belts, harnesses, nets, fall arresters, life lines, safety hooks, or any similar equipment of a type that will effectively protect persons against falls;*
   d. *mats, barriers, locking-out devices, safety signs, or any similar facility that will effectively prevent slipping, unsafe entry or unsafe conditions;*
   e. *protective ointments, ear-muffs, ear-plugs, respirators, breathing apparatus, masks; air lines, hoods, helmets, or any similar safety equipment or facility of a type that will effectively protect against harm;*
   f. *suitable insulating material underfoot where persons work on a floor made of metal stone, concrete or other similar material; and*
   g. *generally, such safety equipment or facilities as may be necessary to render the persons concerned safe.*

2. General Workshop rules.

   a. *Enter and leave the centre in an orderly manner.*
   b. *Never play the fool or joke around.*
   c. *Place school bags neatly outside the centre, or a place which is indicated.*
   d. *Take off your jacket, tuck in your shirt, take of your tie, role up long sleeves and put on your workshop overall or dust coat.*
   e. *Wear a apron, gloves and helmet when welding*
   f. *Take your place at your workstation.*
   g. *Check the tools on the tool rack.*
   h. *Report missing or damaged tools.*
   i. *Each tool should be replaced at the end of a lesson.*
   j. *Handle tools as if it is your own.*
   k. *Tools must never be thrown down on the workbench. Place them down carefully.*
   l. *Planes should always be put on their sides.*
   m. *Sharp ends of tools should always be kept in a downward position when moving around.*
   n. *Chisel away from the body.*
   o. *Use tools for what they are intended.*
   p. *Us goggles when using the emery grinder.*
   q. *Clamp work piece tightly when drilling in the drill press.*
   r. *Protect surface of drill press by drilling on a piece of wood.*

s. *Use cooling liquids when cutting thread.*
t. *Don't put screws, nails and rivets in your mouth while working.*
u. *Lubricate moving parts of tools and machines*
v. *Protect tools against rust by covering with a thin layer of oil.*
w. *Report accidents immediately to the teacher.*
x. *Report broken tools like hammer shafts that needs repair immediately.*
y. *Keep the floor clean and dry.*

2.1. Safety when working on or under a motorcar in the work shop.

a. *Park the vehicle on a level surface.*
b. *Put the car in gear and pull up the parking brake.*
c. *Put a stone or block in the front and behind the front wheels when jacking up the rear wheels. Handbrake only works on the rear wheals.*
d. *Place the jack in an upright position on a level and hard surface.*
e. *Place the top of the jack against a firm place on the chassis of the vehicle so that it doesn't slip off.*
f. *Use the correct size and type of jack.*
g. *Place trestles underneath the car when the car has been jacked up.*
h. *Do not remove the radiator cap of hot engines.*
i. *Do not work with an open flame near the fuel tank or carburettor of the car.*

2.2 Name FOUR safety measures that should be followed when working with compressed air.

- *Make sure all connections are tight.*
- *Do not put the hose into your mouth, nose or ears.*
- *Do not play or make jokes with compressed air/pneumatic equipment.*
- *Do not use compressed air to blow dust from your clothes.*
- *Hold the compressed air nozzle firmly when you open the air valve.*
- *Put large truck and tractor tires in a cage when inflating them for the first time.*
- *Make sure that the cylinder is not corroded or damaged in any way.*

2.3 Occupational Health and Safety Act, 1993

Report to inspectors regarding certain incidents

Each incident occurring at work or arising out of or in connection with the activities of persons at work, or in connection with the use of farm machinery, in which, or in consequence of which -

a. *any person dies, becomes unconscious, suffers the loss of a limb or part of a limb or is otherwise injured or becomes ill to such a degree that he is likely either to die or to suffer a permanent physical defect or likely to be unable for a period of at least 14 days either to work or to continue with the activity for which he was employed or is usually employed;*
b. *a major incident occurred; or*
c. *the health or safety of any person was endangered and where -*
i. *a dangerous substance was spilled;*
ii. *he uncontrolled release of any substance under pressure took place;*
iii. *machinery or any part thereof fractured or failed resulting in flying, falling or uncontrolled moving objects; or*
iv. *machinery ran out of control,* shall, within the prescribed period and in the prescribed manner, be reported to an inspector by the employer.

2.4 Treatment of cuts that occurred on the farm or workshop.
(Remember to safeguard yourself when helping a person that has been injured by avoiding any contact with blood or open wounds by using first aid gloves)

Pressure can be applied on pressure points if the bleeding is serious but only for 15 minutes or until a dressing is applied.

Pressure on the bleeding wound itself can be applied if the bleeding is not to serious.

Make the person comfortable with the injured part supported higher than the rest of the body.

Remove foreign objects that protrude from the wound.

Clean the wound with running water and clean the surrounding skin with a swab. Use each swab only once.

Apply wound dressing firmly, cover it with a small cussing and tie up with a bandage.

Ensure that the injured part cant be moved.

Call for medical help.

Dispose of all clothes and bandages that were used to clean the blood.

3. Electrical Safety

3.1 General electrical safety rules.

Do not play with kites under power lines.

Don’t climb on overhead power line poles or structures.

Do not try to free a toy that is lodged in the overhead power lines.

Do not direct a hose at overhead power lines.

Do not touch overhead power lines that have been brought down by storms or fallen trees.

Do not climb in trees that are near overhead power lines.

Don’t throw pieces of wire over electric overhead power lines.

Don’t replace electric bulbs, plugs, lamp holder’s fuse or anything else before switching of the power supply.

Let the members of the family know if you are switching the power off, in case somebody switches it on again.

Do not use electrical apparatus with broken or damaged power cords or insulation.

Do not use twin flex on appliances that uses a great amount of power.

Do not place electric irons on the top of a table, use asbestos to place the iron on and stand the iron on its top.

Do not forget to switch appliances off after use.

Don’t use electrical appliances in the bathroom.

Do not withdraw a plug from the wall socket before switching off the wall socket.

Do not tug at the cord of a plug when you are removing it.

Do not use a plug with a broken or missing cover.

Do not connect wires to the wall socket by jamming it in the holes with matches.

Do not overload a wall socket.

Roll up power extension lines that are not in use.

Do not pinch power cords under doors, windows or furniture.

Do not touch or try to move a person who has had an electric shock and is still in contact with the power line. Switch the power off at the main board.

Do not play the fool with electricity. It is very dangerous.

3.2 List the order of five actions that should be taken to secure the person that has sustained a electrical shock

Remove person to a safe place by pulling him by his clothes or using an insulating medium like rope, gloves to free him from the contact point.

Loosen clothes around his neck and make sure that he gets enough fresh air.

Resuscitate the person if unconscious (emergency treatment). Use special resuscitate apparatus that is supplied in all first aid boxes.

Bend the head slightly backwards to prevent the persons tongue from restricting the back of the throat.

Keep him warm, calm and comfortable when the person regains consciousness.

No liquids must be administered to the person.

Call for help

3.3 Name some situations that can cause electrical shock to workers.

Damaged insulation material.

Inadequate or faulty earth leakage protection.

Open electric wires.

Overloading of electric installations.

Wrong connection of electric wires.

Lack of knowledge.

3.4 To reduce the risk of electrical injury with overhead power lines

Check the location and height of power lines before beginning work anywhere near them.

Always leave at least 15 metres clearance between any buildings (e.g., grain bins) and overhead power lines.

Trim tree branches that could touch power lines.

Don't allow children to climb any tree near a power line.

Make sure TV and radio antennas on rooftops and elsewhere are at least three metres away from all power lines.

Don't fly kites and model airplanes near power lines; if a kite or similar object does get tangled on a line,

Never store or handle grain probes, irrigation pipes, steel reinforcement bars and bin hoists near power lines.

3.5 Reduce the Risk of Contact with Overhead Power Lines

Know safe distances for working near power lines.

Know the height of all equipment.

Lower equipment (e.g., augers, bin hoists) before moving even a short distance.

Have someone who knows minimum distance requirements 'watch for lines' when moving equipment.

Locate power lines that cross public roads.

Plan a safe route for moving large equipment.

Never attempt to raise or move a power line.

3.6 Occupational Health and Safety Act, 1993 Responsibility for electrical installations

1) *Subject to subregulation (3), the user or lessor of an electrical installation, as the case may be, shall be responsible for the safety, safe use and maintenance of the electrical installation he or she uses or leases.*
2) *The user or lessor of an electrical installation, as the case may be, shall be responsible for the safety of the conductors on his or her premises connecting the electrical installation to the point of supply in the case where the point of supply is not the point of control.*
3) *Where there is a written undertaking between a user or lessor and a lessee whereby the* responsibility for an electrical installation has been transferred to the lessee, the lessee shall be responsible for that installation as if he or she were the user or lessor.

3.7 Safety rules when installing or working on electrical installations.

Wear a safety overall and safety boots with rubber soles.

Make sure that electricity is switched off before working on an electrical installation.

Place a sign at the isolation switch to warn people of work being done on the installation.

Zero en overload protectors must be installed in the starters of motors to protect it

Inspect electrical equipment on a regular base to determine if earth wires are still in place and in working order.

Inspect wires for bad connections, cracked insulation, defective joints in cables and broken lids of distribution boards.

Do all installation works on electrical installations according to the regulations that is prescribed.

4. Fire prevention

4.1 Fire prevention rules

Provide, maintain and test fire extinguishers.

Make sure all fire fighting equipment is accessible and clearly visible.

Develop procedures for safe handling and transportation of flammable substances.

Prohibit use of gasoline for cleaning or starting fires.

Prevent accumulations of explosive substances, clear the work area if accumulations

exceed limits.

Develop safe work procedures for the installation, use and maintenance of

compressed and liquefied gas systems.

4.2 Discovering a Fire

If you discover a fire, immediately raise the alarm by following the instructions at your nearest alarm point. Warn people in the immediate vicinity and evacuate the building.

4.3 Emergency Evacuations

Make yourself familiar with fire escape routes and evacuation procedures in your department and residential accommodation, including the escape routes and assembly points. Notices are displayed in all School buildings. Fire drills will be held at least once a year. You must follow any instructions given to you by Teachers, Security or the Emergency Services.

Please be aware of anyone in your work area or on your corridor who might need help during evacuations because of restricted mobility or special needs. This includes anyone with a long-term disability, individuals who might not hear an alarm, and, for example, someone with a leg in plaster.

Do not use lifts. Do not re-enter buildings until permission is given by the Teachers, Emergency Services or Security.

4.4 Fire Extinguishers

Make yourself familiar with the location of your nearest fire alarm call points and the types, location and operation of fire extinguishers in the School.

If you discover a small fire you should raise the alarm and, if it is safe to do so without personal risk, attempt to extinguish it with an appropriate extinguisher before leaving the area. Close all doors behind you. Water extinguishers and foam extinguishers must not be used on electrical fires. These should be tackled with dry powder or CO_2 extinguishers after disconnecting the electricity supply where possible (unless there are local instructions to the contrary).

4.4.1 How to use a fire extinguisher:

Instructions for use should be clearly marked on each extinguisher, but in general:

- *remove the safety pin from the handle*
- *keep the extinguisher upright, (place it on the ground if it is heavy)*
- *aim the nozzle or horn at the base of the fire*
- *squeeze the handles together*
- *sweep the jet across the area of the fire, keep it moving away from you*
- *do not get trapped between the fire and the exit, plan your escape in advance!*

4.4.2 When to use an extinguisher:

- *Only tackle a fire after the alarm has been raised and it is safe to do so*
- *Ensure you are accompanied when you fight a fire or go to investigate, don't do it alone*
- *Only tackle a fire in it's very early stages*
- *Put your safety and that of others first, no heroics!*
- *Only use an extinguisher if you are sure of how to use it correctly.*
- *Do not hold the horn on a CO2 extinguisher – it will be very cold*
- *If the fire is still burning after discharging one extinguisher do not continue to fight the fire but proceed to the assembly area immediately.*
- *If electrical appliances are involved, switch off the power before dealing with the fire.*
- *Do not fight any fire involving hazardous materials for example oxidising agents, pesticides, fuels or gas containers.*

4.4.3 Types of fire extinguishers.

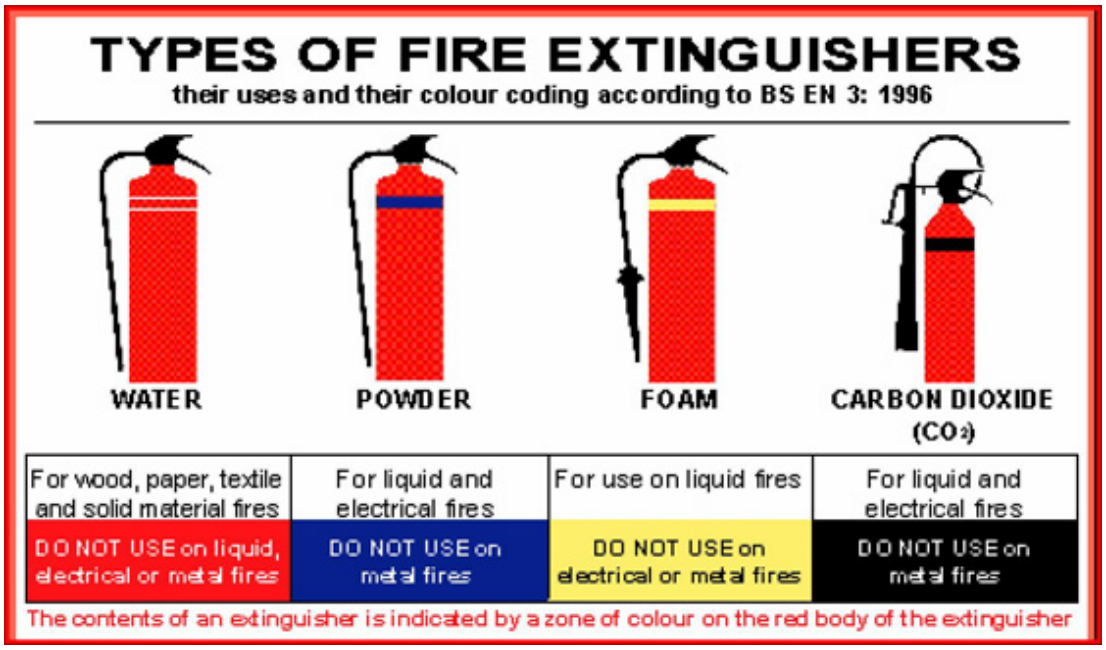

COLOURS

RED WATER

BLUE POWDER

YELLOW FOAM

BLACK CARBON DIOXIDE

4.4.4 Fire Extinguisher Chart

Fire Extinguisher Chart

Extinguisher		Type of Fire				
Colour	Type	Solids (wood, paper, cloth, etc)	Flammable Liquids	Flammable Gasses	Electrical Equipment	Cooking Oils & Fats
	Water	✓ Yes	✗ No	✗ No	✗ No	✗ No
	Foam	✓ Yes	✓ Yes	✗ No	✗ No	✓ Yes
	Dry Powder	✓ Yes	✓ Yes	✓ Yes	✓ Yes	✗ No
	Carbon Dioxide (CO2)	✗ No	✓ Yes	✗ No	✓ Yes	✓ Yes

4.4.5 Occupational Health and Safety Act, 1993 Fire precautions on construction sites

Subject to the provisions of the Environmental Regulations for Workplaces promulgated by Government Notice No. R.2281 of 16 October 1987, as amended, every contractor shall ensure that-

a) all appropriate measures are taken to avoid the risk of fire;

b) sufficient and suitable storage is provided for flammable liquids, solids and gases;

c) smoking is prohibited and notices in this regard are prominently displayed in all places containing readily combustible or flammable materials;

d) in confined spaces and other places in which flammable gases, vapours or dust can cause danger-

- *i) only suitably protected electrical installations and equipment, including portable lights, are used;*
- *ii) here are no flames or similar means of ignition;*
- *iii) there are conspicuous notices prohibiting smoking;*
- *iv) oily rags, waste and other substances liable to ignite are without delay removed to a safe place; and*
- *v) adequate ventilation is provided;*

e) combustible materials do not accumulate on the construction site;

f) welding, flame cutting and other hot work are done only after the appropriate precautions as required have been taken to reduce the risk of fire;

g) suitable and sufficient fire-extinguishing equipment is placed at strategic locations or as may be recommended by the Fire Chief or local authority concerned, and that such equipment is maintained in a good working order;

h) the fire equipment contemplated in paragraph (g) is inspected by a competent person, who has been appointed in writing, in the manner indicated by the manufacturer thereof;

i) a sufficient number of workers are trained in the use of fire-extinguishing equipment;

j) where appropriate, suitable visual signs are provided to clearly indicate the escape routes in the case of a fire;

k) the means of escape is kept clear at all times;

l) there is an effective evacuation plan providing for all-

- *i) persons to be evacuated speedily without panic;*
- *ii) persons to be accounted for, and*
- *iii) plant and processes to be shut down; and*

m) a siren is installed and sounded in the event of a fire,

CHAPTER 2

MATERIALS AND STRUCTURES
METALS

1. Describe shortly how iron is made. (Furious metal)

   Iron is obtained when iron ore is smelted in a blast furnace together with coke (the fuel) and dolomite that serves as flux.

2. Name FIVE uses of mild steel.

   a. *Rivets.*
   b. *Bolts.*
   c. *Nuts.*
   d. *Steel sections*
   e. *Plates, Wire*

3. Mild steel products

   Identification and uses of the following steel sections:

   - *Flat beams; (Implements, Construction)*
   - *square tubing; (Implements, Structural beams, Tank stands)*
   - *square bar; (Draw bars, implements)*
   - *purlines; lip channel; (Roofs)*
   - *angle iron; (Construction, Implements)*
   - *round tubing; (Water pipes, Tank stands)*
   - *round bar. (Re enforcement, Bolts, Construction, Implements)*
   - *Corrosion*

1. What is corrosion?

Corrosion is the slow process of metal deterioration. This process takes place when pure metals are exposed to oxygen and water or when other corroding substances like acids or alkaline combine with it, or when it takes place electrolytically.

2. Name and describe the three types of corrosion.

   Oxidation
   Oxidation takes place when oxygen and water in the air combine with a metal.

   Electrolysis
   This process takes place when two different metals touch.

   Corrosion through acids
   Acids may also be present in the air and because they are in a vapour form they work in or on metals e.g hydrochloric acid vapour.

3. Name the different methods of preventing corrosion.

   a. Oil
   b. Grease
   c. Lacquer or varnish
   d. Paint
   e. Electroplating

4. Describe how metal is finished off by polishing it.

   a. See that the surface is clean
   b. Warm the metal slightly
   c. Apply a layer of polish
   d. Allow it to dry
   e. Rub in the polish with a clean cloth
   f. Finishing will take place in due course
   g. Polish has a translucent quality
   h. The polish protects the metal against corrosion.

5. Name the procedures to follow when applying enamels and varnish.

   a. The surface of the metal should be clean
   b. Ascertain whether the metal has been finished off
   c. Use a clean cloth or paper to handle the metal with
   d. Warm metal slightly so that the varnish will flow well
   e. Use a good clean brush and apply small quantities at a time
   f. Never paint over any area twice
   g. Allow the article to dry in a warm clean room
   h. If necessary give a second application only after the first is dry
   i. Determine the paint base
   j. Turpentine base – use turpentine for cleaning the brush,
   k. Water base – use water

Hardening and softening of steel

1. What is the reason/objective of giving metals a heat treatment?

   a. To increase the degree of hardness and strength.
   b. To increase elasticity.
   c. To soften metals for the working processes to follow.
   d. To eliminate internal tension caused by machining.

2. Describe what is meant with annealing?

   Refers to one of the heat treatment processes which has been developed to soften hardened steel so that it can readily be put through further processes of reshaping.

3. Name the three phases of the annealing process.

   a. Heating to an acceptable temper temperature.
   b. Working through for a sufficient period at a chosen temperature.
   c. Cooling at a controlled temperature.

4. Name the factors that have an influence on the heat treatment of metals.

   a. Carbon. (Greatest influence of all)
   b. Tempo of cooling.

5. Describe the following:

   a. End maximum temperature

   Highest temperature 720°C to which a piece of steel can be heated to effect efficient hardening by fast cooling.

   b. End minimum temperature

   The lowest temperature 695°C to which a piece of steel can be heated and still be hardened efficiently.

   c. Tempering

   The process by means of which a tool is cooled in order to affect certain hardness.

   Steel is tempered by heating it to an acceptable temperature and cooling it in oil.

   The temperature to which the steel is heated is determined by the use of the steel afterwards. (

   d. Matrix

   Base metal.

   e. Critical point

   Little or no hardening will take place if the metal is not heated to a temperature between 695°C and 720°C.

   f. Malleability

   The ability of metal to become transformed without breaking.

   g. Slip

   Refers to atom disruption, fragmentation or mat-disruption of metal when it is reshaped by cold working. Can only be removed by heat treatment.

   h. Case hardening

   The surface of the steel is hardened up to a depth of two millimetres heating the steel in carbon.

6. Explain how rapid cooling and slow cooling affect the hardness of the base metal.

Rapid cooling:

- carbides are not given the opportunity to become separated from the
- matrix again
- in which case the steel will be rich in carbon and alloy elements
- and will be very hard.

Slow cooling:

- carbides will be able to become separated from the matrix
- coming out of solution and the matrix become poor in carbon and alloy elements and therefore softer.

7. How can cracks be prevented during the fast cooling process?

   Cool steel in oil and not in water.

8. Describe the Hot working of steel, and provide the advantages and disadvantages.

a) Describe the Hot working of steel.

   a. A steel rod has no economical value if it is not transformed into a useful form.
   b. Hot working is the reshaping of a hot steel rod into structural shapes e.g. bars, plating.
   c. Hammering, pressing or rolling reshapes the steel that is in a plastic state.
   d. Reshaping of iron is done at a temperature of 450°C.

b) Name the advantages of hot working.

a. Porosity is greatly eliminated.
b. Impurities in the form of inclusions are broken up.
c. Physical properties are improved.
d. Amount of energy needed to bring the steel to its new form is much less than cold working.

c) Name the disadvantages of hot working.

a. Enormous oxidation takes place that forms scale on the metal surface..
b. No fine tolerances can be acquired due to scale on the surface.
c. The thickness of the metal increase when heated.

9. Describe the Cold working of steel.

a. Metal is worked at a temperature lower than the recrystalizing temperature.
b. Most metals are cold worked at room temperature.
c. Reshapes metal by rolling, drawing or stretching it.

10. Name the advantages of cold working.

a. Finer dimensional tolerances can be retained.
b. A smooth surface finishes because oxidation does not occur.
c. Strength and hardness of the metal are increased.
d. Process is cheap.
e. Greater number of parts can be manufactured more quickly.

11. Name the disadvantages of cold working.

a. A tension that can only be removed afterwards by heat treatment develops within the metal.
b. Distortion of the grain develops.
c. Higher pressure and heavier equipment are used.
d. Overworking result in the metal becoming brittle, and it is necessary to soften it once more.

WOOD

1. Name the three types of doors draw each and give a use of each.

   a. Ledge door. Fig. 3.1

   Used as temporary doors.

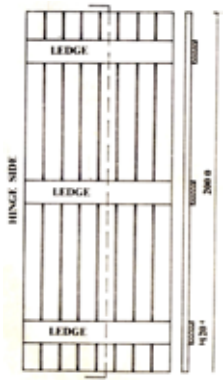

   b. Ledged and braced door.

   Used as doors for outbuildings.

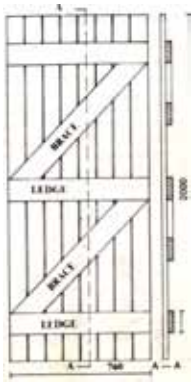

   c. Ledged and braced batten door.

   Used for Back doors, stable doors and workshop doors.

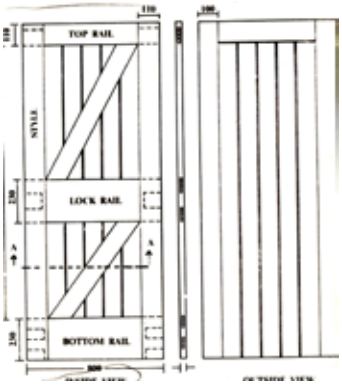

2. Name the four timbers that we are investigating.

   a. Pine timber.
   b. Blue gum.
   c. Poplar.
   d. Wattle.

3. Name the uses and the properties of pine.

Properties

a. Soft
b. Colour varies from yellowish white to yellowish red.
c. Show clear annual rings.
d. Resinous.
e. Durable
f. Easy to work with.
g. Nail, varnish and paint well.

Uses

a. Packing cases
b. Building material
c. Furniture
d. Paper and pulp
e. Moulds for casting
f. Laminated woods
g. Shipbuilding
h. Gymnastic apparatus
i. Wood wool

4. Name the uses and the properties of wattle.

Properties

a. Soft wood.
b. White to straw colour.
c. Finely grained.
d. Light.
e. Easy to work with.
f. Warps easily.
g. Odourless.

Uses

a. Matchboxes.
b. Toys.
c. Furniture.
d. Packing material.
e. Woodworking.
f. Crates.
g. Firewood.
h. Washing pegs.

5. Name the properties and the uses of Blue gum.

Properties

a. Relative hard.
b. Fairly resilient.
c. Straw colour.
d. Heavy.
e. Absorbs preservatives readily.
f. Easy to work with.
g. Very durable.
h. Untreated wood attacked by wood borers.

Uses

a. Power and telephone lines.
b. Building material.
c. Furniture.
d. Mine props.
e. Packing cases.
f. Wood shavings.
g. Crush pens.
h. Cattle kraals.
i. Fence poles.
j. Crates

6. Name the properties and the uses of Poplar.

Properties

a. Soft wood.
b. White to straw colour.
c. Fine grained.
d. Low density and light.
e. Dries well.
f. Easy to work with.
g. Warps easily.
h. Odourless.

Uses

a. Matchboxes.
b. Toys.
c. Furniture.
d. Packing material.
e. Woodworking.
f. Crates.
g. Firewood.
h. Washing pegs.

7. Name one species of pine timber.

Pinus Patula

8. Identify the wood, which you can use for the post, and give a reason for your answer.

Blue Gum.
Hard wood/Resistant to weathering/Resistant to insects.

9. Which protective measures can you take to prevent deterioration of wood poles used in fencing?

Treat poles with creosote.
Creosote penetrates deep into the wood and is not washed out easily.

BUILDING MATERIALS

1. Name the four basic materials needed for the erection of a building.

   a. Cement.
   b. Sand.
   c. Stone.
   d. Water.

Cement

2. Describe shortly

   1. Cement is supplied in sacks of 50 kg.
   2. Types of cement is PPC, Holcim etc.
   3. Cement must be used as soon as possible; within 3 months it will lose 20%of its
   4. strength and 40% after 6 months.

3. Storage of cement.

Cement must always be stored in a dry place free of moist. Plastic can be used to cover the cement packs away from soil or cement floors, so that the cement is protected against moisture including dew at night. Cement bags must be stored on wooden planks to prevent moisture/damp from the floor form lumps in the cement and become unusable.

4. What happens to cement when it is stored for too long and no longer fresh?

   a. It looses 10% of its strength for each month that it is stored depending on climatic conditions.
   b. Old cement losses its chemical activity and might not set
   c. Old cement forms clumps and do not mix thoroughly

Sand

5. Describe shortly

   - Building sand consists of particles between 0,1 mm and 5 mm in size.
   - Sand must be free from dust, clay, salt or organic material such as
   - leaves and grass etc.
   - Sand derived from shale or slates must be avoided.
   - Building sand must have enough lime to: to allow the bricklayer to place the
   - brick in position, before drying out.

6. Name the properties of building sand.

   a. Clean.
   b. Free from dust.
   c. Free from silt.
   d. Free from clay.
   e. Free from organic material.

7. Name three suitable types of stone used for building purposes.

   a. Crushed stone.
   b. Natural gravel.
   c. River gravel.
   d. Granite.

8. Plaster sand.

   - Plaster sand must always be sifted with a 5mm grid to get rid of all the dust otherwise deep cracks will occur in the plaster.
   - Never use river sand, pit sand, dune sand or sea sand for plaster.

Stone

9. Describe shortly

   - Stone usually varies in size between 5 mm and 50 mm.
   - The most popular sizes are between 10 mm and 40 mm.
   - Stone must be clean, durable, hard strong cubical or spherical in form.
   - Larger-sized stone requires the smallest quantities of sand and cement.
   - Stone is usually a mixture of small and large particles.
   - Crusher stone is mainly used for concrete.
   - Stone that consist of shale, slates or sandstone must be avoided.

10. Name three unsuitable types of stone that can not be used for building purposes.

    a. Slate.
    b. Sandstone.
    c. Limestone.

Water

7. What is the general rule for the usage of water for building purposes?

   Water that is suitable for drinking is suitable for building.

8. What happens to concrete when you mix too much water into it?

   Gives a weak 1 that is very porous.

9. Explain why the concrete for building the water trough cannot be poured during a very cold

   day when the temperature drops below freezing point.

   The water inside the concrete mixture will freeze and expand causing small cracks and a weakened concrete mixture.

Bricks

10. Types of bricks

1. General clay bricks:

Sizes:

Length	Width	Thickness
222	90	114
222	106	73
222	140	73
222	73	106

These bricks can be used for the inside walls of a building but it depends on the hardness of the bricks otherwise it can be used as fair-face bricks for the outside walls that do not need plastering to save maintenance costs.

2. Cement bricks

Name the basic material used for making cement bricks.

a. Cement.
b. Sand.
c. Water.

Sizes:

Big hollow block bricks and the normal size bricks:

Length	width	thickness
222	106	73

These bricks must be plastered.

3. Face bricks

Sizes:

Length	width	thickness
222	106	73

Mixing of concrete

11. What type of stone would you use for making cement bricks?

No stone must be used.

12. Name three factors that determine the ratio to which the basic building material has to be mixed.

a. Purity of the sand.
b. Fineness of the grain of the sand.
c. Age of the cement.

13. Name two methods of mixing concrete?

Concrete mixer.
Spade.

14. What rule must be remembered when mixing concrete?

Concrete starts setting after 1Hour, and must not be re-mixed after that period.
The concrete will loose its strength.

15. Curing of concrete.
    Keep moist for at least 7 – 10 days afterwards.
    Paint with curing paint.

16. Basic building mixtures. NB

Ratios
Concrete (Cement, sand stone and water mixture.
Different ways of mixing – mixer, hand mix and ready mix.

Strong mixture		Medium mixture		Standard mixture	
Cement	1	Cement	1	Cement	1
Sand	2	Sand	3	Sand	4
Stone	2	Stone	3	Stone	4
Water	3	Water	4.5	Water	5.25

FENCING

Suitable fences and fencing material

1. How is the placing of a boundary fence determined?

   The placing of boundary fences are determined with the aid of beacons or boundary marks placed in position by a surveyor to determine the area which the farm covers according too the property rights in the deeds registry office.

2 Who must pay for the erecting of a boundary fence between two farms?

   The two neighbours concerned is liable for half each of the cost.

3. Name seven requirements for suitable fencing material.

   a. Extend in a straight line.
   b. Sturdy corner and straining posts.
   c. Posts and droppers upright.
   d. Straining posts not far from one another.
   e. Strands firmly attached to line posts.
   f. Droppers should divide spaces between adjacent posts proportionally.
   g. Don't use inferior material.

Types of fences

19. Name five types of wire netting, and their uses.

   a. Hog wire, pig pens
   b. Chicken mesh, chicken runs.
   c. Hail netting, bird aviaries, and hail protection for vegetable gardens.
   d. Jackal proof, keep vermin's like jackal out.
   e. Bonnox, Cattle keeping kraals.

4 What is the height of the following fences?

a. Sheep- 900mm, 6 strands of barb wire.
b. Cattle- 1200mm, 6 strands of barb wire.
c. Game- 2400mm, 12 strands of barb wire.

5. Give another name for a vermin excluding fence.

Jackal proof fence.

Fencing components

Posts

6 Name three types of corner posts.

a. Metal tubing.
b. Concrete posts.
c. Stone posts.

10 Why is an iron post preferred too a wood post.

a. Does not decay.
b. Can not burn.
c. Iron standards can be driven into the ground.
d. Insects cannot destroy iron posts

11 Where are wood posts preferred above an iron post?

a. Coast where iron rusts easily.
b. Salty areas.
c. Very soft sand or soil

12 Wooden poles are mainly used for anchors in fencing, but are prone to attack by termites. Discuss if painting these poles with PVA will solve the problem and if no, suggest an effective alternative and give an example.

- No, painting only protects the surface, and if surface is broken no further protection.
- PVA is not protection against termites or woodborers Poles are protected by creosote

13. Identify the type of wood and give an example that you would use as a corner post when erecting a boundary fence.

- Hard wood.
- Black wattle/Blue gum

Droppers

7. Name the three types of iron standards.

a. L – Standard.
b. Y – Standard
c. H – Standard.

8 Name three types of droppers.

a. Iron dropper
b. Wire dropper.
c. Wood dropper.

9 Name four types of iron droppers.

a. H- section.
b. T-section.
c. V-section.
d. Ridgeback.

Anchors and support

20. Give another name for a anchor.

Dead man

21. Name three things that can be used as a dead man.

a. Rock or concrete block.
b. Treated timber post.

14. Name three things that can be used as an anchor.

a. Rock or concrete block.
b. Treated timber post.
c. Steel plate.

15. Make neat drawings of:

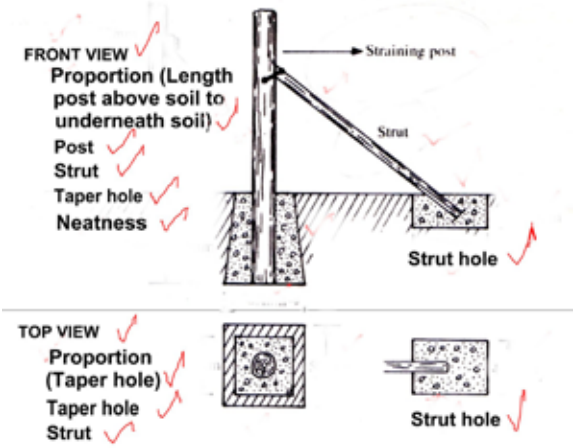

a. Single post anchor.

b. Trestle anchor.

16. Why must anchor stays not extend too the outside at a corner of a fence, and how *can you overcome this problem.*

Animals could injure themselves when they trip over the wires.
Use struts that extend alongside the fence.

Gates

17. Draw neat sketches that illustrate the two methods of placing a gate in a fence.

18. Make a neat sketch that illustrate how gates should be placed at the common corner of four paddocks.

CHAPTER 3

ENERGY
DIRECT CURRENT SYSTEMS

UNITS AND THEIR SYMBOLS

1. Describe each of the following shortly.

   a. Current. (Ampére) Symbol: I

   Flow of electrons from one point to another.

   b. Resistance. (Ohm) Symbol: Ω

   Each conductor offers a certain resistance to the flow of electric current.

   c. Voltage. (Volt) Symbol: V

   It is the electric pressure to overcome the resistance that the conductor offers against the flow of current.

   d. Potential difference. (pd) (volt)
   The one pole is more positively charged than the other negative pole, and since electrons flow from a negative to a positive charge the potential still exists even when the connection is broken.

2. Describe Ohms law.

   The current flowing is proportional to the supply voltage and inversely to the resistance.

3. Draw the magic triangle.

4. Calculate the resistance (R) of a conductor if the voltage is 12 Volts and the current is 2 Amps.

$$R = \frac{V}{I}$$

$$R = \frac{12}{2}$$

$$R = 6\ \Omega$$

ELECTRICAL IGNITION SYSTEM OF A VEHICLE

The battery and its maintenance

BATTERY SAFETY & JUMP STARTING

WARNING: BATTERIES CAN BE DANGEROUS!

WARNING: Automotive lead-acid batteries contain sulfuric acid in the electrolyte. The acid inside the battery is highly corrosive and can burn your skin if it leaks out of the battery and gets on your skin. This is NOT a danger if the battery is a “gel” type that does not contain liquid acid. But it can be a concern if the battery contains liquid acid and has removable caps on top. Sealed top batteries should contain the liquid as long as the battery remains in an upright position (do NOT turn it sideways or upside down). Acid may leak out if the battery case is cracked or damaged, so handle with care.

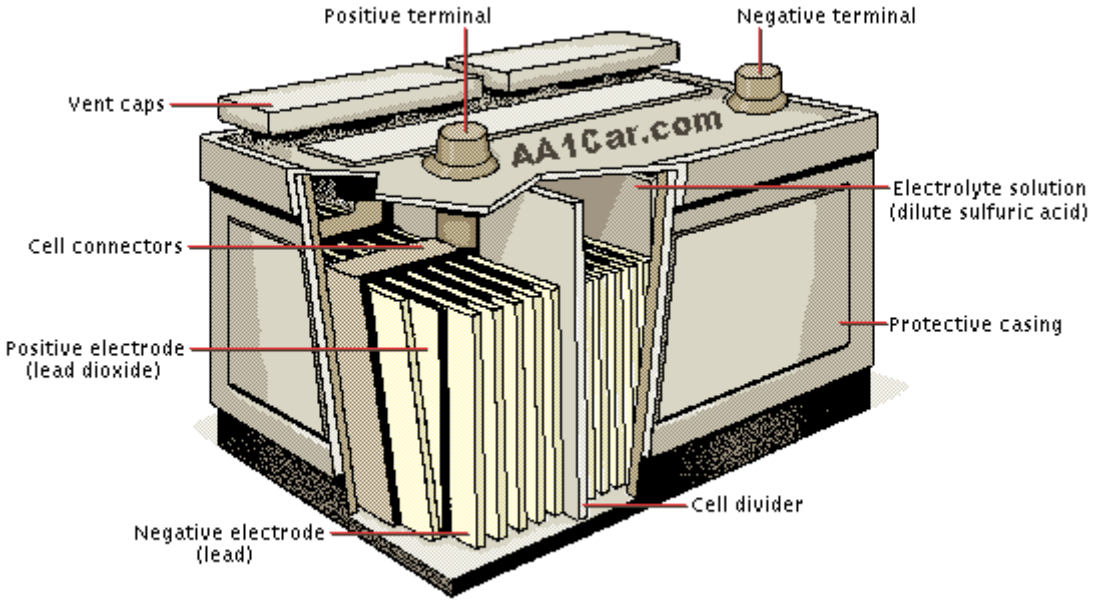

WARNING: Batteries can also explode. When a battery charges, it gives off hydrogen gas. Hydrogen is flammable and can explode if a spark occurs near the battery (as when connecting a jumper cable, see safe jump start procedure below).

DO NOT smoke around a battery, or use anything that produces an open flame or spark. The photo below shows what can happen to a battery when a spark causes it to explode.

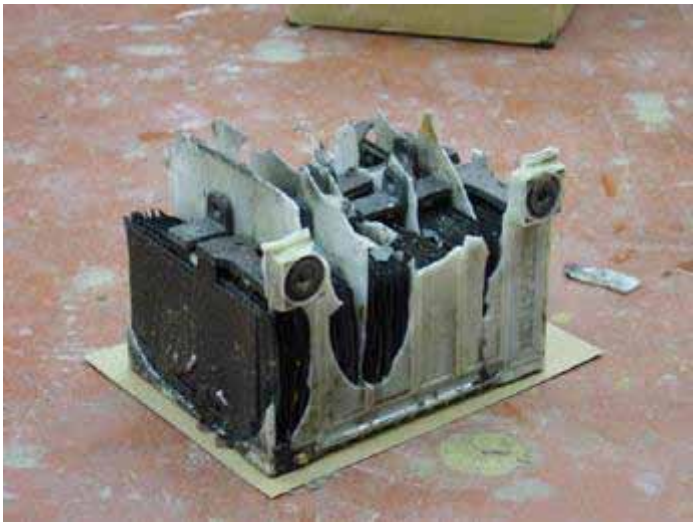

What can happen if a spark ignites hydrogen gas in a battery.

DO NOT attempt to jump start or recharge a frozen battery. Remove the battery from the vehicle, bring it into a warm room and let it thaw before charging or testing.

Always wear safety glasses when jump starting a battery (to protect your eyes), and gloves when handling a battery (to protect your hands).

According to PREVENT BLINDNESS AMERICA, in 2003 nearly 6,000 motorists suffered serious eye injuries from working around car batteries.

Follow the manufacturer's instructions for testing, jumping, installing, discharging, charging, equalizing and maintaining batteries.

SHOCK HAZARDS

Batteries only produce 12 volts, so there is NO danger of being shocked. However, batteries can produce hundreds of amps, so never touch a metal object such as a wrench between the positive and negative battery posts to see if the battery will spark. It will, and produce a current similar to a welding arc that may damage the tool, the battery and/or cause the battery to explode!

WARNING: On hybrid electric vehicles such as the Toyota Prius, Lexus RX400H, Honda Insight, Ford Escape hybrid, etc., the hybrid battery pack in the back of the vehicle is a HIGH VOLTAGE (300+ volts!) battery. Three hundred plus volts is enough to shock you or kill you, so NEVER work on the hybrid electrical system on one of these vehicles without first disabling or disconnecting the high voltage battery per the vehicle manufacturer's instructions. This must be done with insulated tools and gloves. The high voltage wiring is usually color-coded ORANGE.

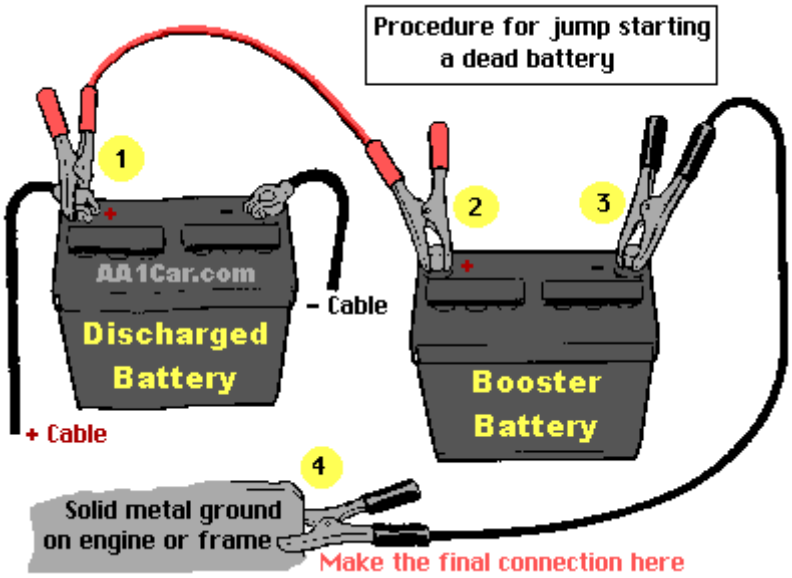

Safe Battery Jump Start Procedure

If a battery is dead or too low to crank the engine, you can jump start it using a pair of jumper cables to connect the low/dead battery to a good battery in another vehicle.

Pull the other vehicle as close as possible to the one with the dead/low battery, but DO NOT allow the vehicles to touch. Open the hood on both vehicles, and shut OFF the engine in the other vehicle.

Jumper cables are color coded, RED for POSITIVE (+) and BLACK for NEGATIVE (-). DO NOT mix up the cables or allow the metal ends to touch together because this may damage the battery, charging system and/or electronics on a vehicle.

To jump start the battery, proceed as follows:

1. Connect one end of the RED jumper cable to the POSITIVE (+)post on the dead battery. The POSITIVE battery post will be slightly larger than the NEGATIVE post, and will be marked with a PLUS (+) sign. There may also be a RED plastic protective cover over the positive bttery post.

2. Connect the other end of the RED jumper cable to the POSITIVE (+) post on the good battery.

3. Connect one end of the BLACK jumper cable to the NEGATIVE (-) post on the good battery.

4. Connect the other end of the BLACK jumper cable to a heavy metal ground on the engine or frame of the vehicle with the dead battery. DO NOT make the final jumper connection to the NEGATIVE (-) post on the battery itself because it usually sparks and may ignite hydrogen fumes in the dead battery causing it to explode.

NOTE: On some vehicles the battery is not easily accessible (because it is located inside a fender panel, trunk, etc.), so there may be special jumper connections in the engine compartment for jump starting the vehicle.

CAUTION: DO NOT lean directly over the battery while making jumper connections (in case of explosion).

5. Start the vehicle with the good battery, and run the engine at a fast idle (1200 to 1500 rpm)for a couple of minutes. This will help charge up the low battery and make starting easier.

6. Now you can start the vehicle with the dead battery. If it does not crank or cranks very slowly, wiggle the jumper connections to make sure they are making good contact. Then try again. The engine should start if there are no other problems (such as a bad starter or ignition circuit problem).

7. As soon as the engine starts, disconnect both jumper cables. Do not allow the metal ends of the jumper cables to touch each other or the RED cables to touch anything metal on either car.

8. Keep the engine running 20 to 30 minutes, or drive the car to recharge the battery. During this time, leave the lights, heater, A/C and other electrical accessories off so all of the charging system's output can go into the battery.

NOTE: If the engine dies shortly after it has been jump started, or as soon as the jumper cables are disconnected, it probably means the charging system is not working (bad alternator, voltage regulator, wiring problem or loose/dirty battery cables).

If the vehicle runs okay and the battery charges up, you should clean and tighten both battery cables after shutting the engine off. The battery and charging system should also be tested to make sure both are working properly.

Watch Battery Jump Starting Video

Battery Cautions When Making Repairs:

It is usually a good idea to disconnect the battery before doing electrical repairs. Disconnect the negative battery cable from the battery. This will prevent accidental damage to onboard electronics or wiring if you accidentally cross up the wrong wires or short out a live circuit.

WARNING: NEVER disconnect a battery when the ignition is ON, or while the engine is idling or running. Doing so can damage electrical and electronic components.

Warning: Disconnecting the battery may cause electronic modules to forget information.

CAUTION: DISCONNECTING THE BATTERY ON SOME LATE MODEL VEHICLES MAY CAUSE DRIVEABILITY OR OTHER PROBLEMS: When the battery is disconnected, power to the PCM and other onboard modules is lost. This can cause a loss of Keep Alive Memory settings. In effect, this “resets” the PCM back to its base settings, so the engine may not run properly until the PCM adaptive memory can relearn these settings. The same goes for the transmission. It may not shift properly or feel the same until the PCM or TCM has had time to relearn the shift adjustments. This may take 10 to 50 miles of driving. Read This BEFORE you disconnect or replace a battery on a late model vehicle.

Disconnecting the battery may also cause other system modules to forget their learned or programmed settings. This includes modules that control the air conditioner, sunroof, power windows, power seats, radio, even some anti-theft or keyless entry systems. Some of these modules may not work properly when the battery is reconnected, or they may remain in standby mode until a special scan tool relearn procedure is performed (which may require a trip to the car dealer for repairs!). So always check your owners manual for any precautions about disconnecting the battery before you remove either cable.

If you are uncertain that disconnecting the battery on your car may cause problems, attach a backup battery, battery charger or Memory Saver” device to the battery cables or the 12 volt power outlet or cigarette lighter BEFORE you disconnect the main battery. If using a Memory Saver (small 9 volt battery), make sure the outlet you plug it into is ON when the ignition is off. Some require turning the key to the Accessory (ACC) position first. Also, leave the doors and truck closed because the interior lights will quickly drain all the voltage from a small 9v battery. You need that extra voltage for the various module Keep Alive Memory settings.

NEVER reverse battery polarity. This may damage the battery, charging system, electrical components or onboard electronics. Except for some antique vehicles, all modern vehicles have a NEGATIVE ground. The NEGATIVE battery post is marked with a minus (-) sign, while the POSITIVE battery post is marked with a plus (+) sign.

Finally, when installing a new battery, make sure the battery is fully charged before the vehicle is driven. This will reduce the strain on the charging system.

Charging a battery

Summary

The objective of this procedure is to show you how to correctly charge a battery using battery charging equipment. Before charging a battery always carry out a visual inspection of the battery to ensure there are no cracks or holes in the casing.

Part 1. Preparation and safety

Objective

- Correctly charge a battery using battery charging equipment.

Personal safety

Whenever you perform a task in the workshop you must use personal protective clothing and equipment that is appropriate for the task and which conforms to your local safety regulations and policies. Among other items, this may include:

- Work clothing - such as coveralls and steel-capped footwear
- Eye protection - such as safety glasses and face masks
- Ear protection - such as earmuffs and earplugs
- Hand protection - such as rubber gloves and barrier cream
- Respiratory equipment - such as face masks and valved respirators

If you are not certain what is appropriate or required, ask your supervisor.

Safety check

- Make all connections between the battery charger and the battery to be charged before connecting to the power supply or turning “ON” any switches.
- Never try to charge a ‘frozen’ battery.
- Make sure that the voltage used to charge the system never exceeds the system design while charging. For instance if you connect two 12 volt batteries in ‘series’ for charging you should use the 24 volt setting on the charger, however if you connect the same two batteries in ‘parallel’ you should only use the 12 volt setting on the charger.
- Never allow a spark or flame to get near the battery.
- Always use the markings on the battery to determine the positive and negative terminals. Never simply use the colour of the cables to determine the positive or negative terminals.
- Make sure that you understand and observe all legislative and personal safety procedures when carrying out the following tasks. If you are unsure of what these are, ask your supervisor.

Points to note

- Slow charging a battery is less stressful on a battery than fast charging is.
- Always remove the negative battery terminal while changing a battery to reduce risk to the vehicle, especially with today’s electronically intensive cars. Use a ‘memory minder’ to retain electronic settings.
- After charging the battery and reinstalling it, always clean the battery terminals and posts.

Part 2: Step-by-step instruction

a. Inspect the battery

Carry out a visual inspection of the battery to ensure there are no cracks or holes in the casing.

b. Connect the charger

heck the charger is unplugged from the wall and turned off. Connect the red lead from the charger to the positive battery terminal. Connect the black lead from the charger to the negative battery terminal. Turn the charger on. Check the charger amperage output to ensure the battery is charging correctly. A slow charger usually charges at a rate of less than 5 amperes. A fast charger charges at a much higher ampere rate depending on the original battery state of charge and should only be carried out under constant supervision.

c. Disconnect the charger

Once the battery is charged turn the charger off. Disconnect the black lead from the negative battery terminal, and the red lead from the positive battery terminal.

d. Test the battery

Allow the battery to stand for at least 5 minutes before testing the battery. Using a load tester or hydrometer, test the charged state of the battery.

Jump-starting a vehicle

Summary

The objective of this procedure is to show you how to start a vehicle with a discharged battery using jumper leads and a second vehicle or battery. For safety always connect the leads in the correct order: positive on discharged battery; then positive on charged battery; then negative on charged battery; then negative to a good ground on the vehicle with the discharged battery - away from the battery itself.

Part 1. Preparation and safety

Objective

- Start a vehicle with a discharged battery using jumper leads and a second vehicle or battery.

Personal safety

Whenever you perform a task in the workshop you must use personal protective clothing and equipment that is appropriate for the task and which conforms to your local safety regulations and policies. Among other items, this may include:

- Work clothing - such as coveralls and steel-capped footwear
- Eye protection - such as safety glasses and face masks
- Ear protection - such as earmuffs and earplugs
- Hand protection - such as rubber gloves and barrier cream
- Respiratory equipment - such as face masks and valved respirators

If you are not certain what is appropriate or required, ask your supervisor.

Safety check

- Make sure that the hood is secure with a stay rod before going under it.
- A spark created above a battery can cause an explosion. So always follow these precautions:
  a. Keep your face and body as far back as you can while connecting jumper leads.
  b. Connect the leads in the correct order -- positive on discharged battery; then positive on charged battery; then negative on charged battery; then negative to a good ground on the vehicle with the discharged battery -- away from the battery itself.
  c. Do not connect the negative cable to the discharge battery because this may cause a spark.
  d. Only use specially designed heavy-duty jumper cables to start a vehicle with a dead battery. Do not try to connect the batteries with any other type of cable.
- Always make sure that you wear the appropriate personal protection equipment before starting the job. Remember, batteries contain acid and it is very easy to hurt yourself even when the most exhaustive protection measures are taken.
- Always make sure that your work area/environment is as safe as you can make it. Do not use damaged, broken or worn out workshop equipment.
- Always follow any manufacturer's personal safety instructions to prevent damage to the vehicle you are servicing.
- Make sure that you understand and observe all legislative and personal safety procedures when carrying out the following tasks. If you are unsure of what these are, ask your supervisor.

Points to note

- Make sure the battery is not frozen; you cannot jump-start a frozen battery.
- Before you disconnect the service battery from the discharged battery, it is good practice to place a load across the discharged battery (such as turning on the headlamps) to absorb any sudden rise in voltage that may occur as the alternator suddenly increases its output.
- In most modern vehicles there are many sensitive electronic devices. These devices are very susceptible to electric voltage surges. One method of reducing the risk of damage to such devices is by using jumper leads that have a built in surge protector. Separate surge protector devices can also be used to reduce the possibility of such surges and voltage spikes.

Part 2: Step-by-step instruction

Locate the charged battery

Locate the charged battery close enough to the discharged battery of your vehicle so that it is within comfortable range of your jumper cables. If the charged battery is in another vehicle, make sure the two vehicles are not touching.

Connect jumper leads

Connect the leads always in this order. First, connect the red, positive, lead to the positive terminal of the discharged battery in the vehicle you are trying to start. The positive terminal is the one with the plus sign. Next, connect the other end of this lead to the positive terminal of the charged battery. Then connect the black, negative, lead to the negative terminal of the charged battery. The negative terminal is the one with the minus sign. Connect the other end of the negative lead to a good ground on the engine block or body of the vehicle with the discharged battery, and as far away as possible from the battery. Do NOT connect the lead to the negative terminal of the discharged battery itself; this may cause a dangerous spark.

Start the vehicle with the discharged battery

Start the vehicle with the discharged battery. If the booster battery does not have enough charge to do this, start the engine in the second vehicle and try it again with the engine running. Turn the lights on to prevent a possible voltage spike damaging electronic equipment.

Disconnect jumper leads

Disconnect the leads in the reverse order to connecting them. Remove the negative lead from the good ground. Then from the second battery. Then remove the positive lead from the second battery and lastly, disconnect the other end from the battery in the vehicle you have just started. If the charging system is working correctly and the battery is in good condition, the battery will be recharged while the engine is running.

16. Describe the battery of a car shortly.

- Car needs a battery for the starter, windscreen wipers, heater, radio, ignition system, lights, etc.
- The source for this power is a battery or accumulator.
- The battery used in vehicles are the leas-acid type.
- It consists of lead plates immerged in a solution of sulphuric acid in side a plastic casing.
- The plates are actually positive and negative plates separated by a plastic separator.
- The acid solution is called the electrolyte

17. Reasons for battery discharge.

- Short circuit in the electrical wiring of the car
- Using the starter for extended periods when the car starts with difficulty.
- When the vehicle is only used for short distances for a long period and the battery cannot be fully charged by the alternator.
- Defective alternator.

18. Reasons for the failure of a battery.

- Short circuits between plates.
- Sulphate deposit onto plates.
- Using impure water when topping up the battery.
- Broken connectors and poles
- Cracked casing.
- Freezing at extreme temperatures.
- Excessive use of starter.

19. Servicing a battery.

- Remove filler caps once a week and make sure that plates are covered with electrolyte.
- Top up with distilled water up to 12mm above plates.
- Check alternator to ensure that battery is not under- or overcharged.
- Test wiring for short circuits or leakages.
- Vehicles should not be stored with the battery attached. Any battery will discharge after a period of time.
- Short trips and unnecessary starts of the engine should be avoided.
- Clean battery terminals regularly.
- Apply vegetable grease to the terminals preventing them from corroding.
- Clean terminals with a solution of bicarbonate of soda.
- A terminal must be loosened and bend open before connecting it again.
- Make sure that the correct terminal is connected to the correct lead.
- Negative is usually connected to the earth of the vehicle and the positive is connected to the starter motor.

20 The function of the accumulator (Battery) is to provide power to the whole electrical system of the tractor.

Name the parts of the electrical system that the battery gives power to.

a. Spark plugs (Petrol engine)
b. Self starter.
c. Instruments.
d. Headlights. (All lights)

21. Name the aspects that should receive special attention when servicing the battery.

a. Check polarity of accumulator before removing it.
b. Always remove earth terminal first.
c. Clean top of battery with bicarbonate of soda.
d. Scrape inside of battery terminals to remove corroded layer.
e. Check the level of the electrolyte.
f. When reinstalling check the polarity.
g. Attach earth terminal after all the other connections have been connected.

22. Give another name for a battery.

Accumulator

23. Name FIVE points to remember when replacing a battery.

a. Replace with a battery of the same size.
b. Replace with a battery of the same voltage.
c. Ensure that the battery is securely fastened.
d. Clean battery and terminals carefully.
e. Apply a corrosive resistant substance like grease to the terminal.

24 Cars, tractors and trucks use a battery, as shown in the sketch below, for various purposes.

1 Which type of acid are used inside the battery and what are used to dilute this acid?

Sulphuric acid. Distilled water.

2 What type of metal are the plates inside the battery manufactured from?

Lead.

3 What type of energy is used to produce electric energy in a battery?

Chemical energy.

4 What type of current is produced by a battery?

Direct current.

25. Name SEVEN symptoms that show that there is defective cabling.

a. Self starter turns slowly.
b. Cables become warm.
c. Cables are covered in acid layer.
d. Cables are broken.
e. Lights are dim.
f. Hooters can hardly be heard.
g. Battery is highly charged but electrical parts function weekly.

26. What is the function of the ignition coil?

Is to increase the voltage in order to bring about an increased voltage in the secondary circuit.

27. Name THREE points to consider when it is necessary to replace an ignition coil.

a. Switch of the vehicle first.
b. Determine the polarity of the coil.
c. Make sure that the coil is of the right type and capacity.

28. What is the function of the distributor?

Directs the current to the correct sparkplug.

29. What is the function of the distributor cap?

a. Protects the capacitor.
b. Houses the high tension wires that extend from the coil to the distributor.
c. Brings about contact between the wires and the rotor.
d. Houses the high tension wires that extend from the distributor to the spark plugs.

30. Label the sketch of the ignition system.

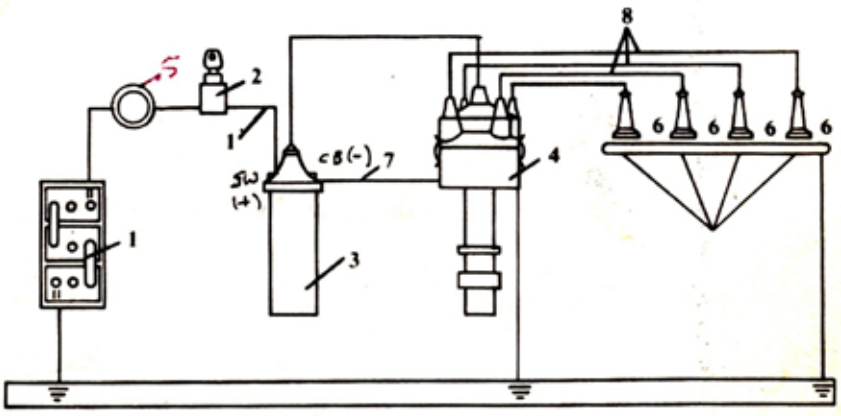

Fig. 7.4 A diagrammatic representation of the ignition system

1. Accumulator
2. Ignition switch
3. Ignition or high tension coil
4. Distributor
5. ~~Ammeter~~
6. Spark plugs
7. Primary conductors (low voltage)
8. Secondary conductors (high tension)

31. Name FIVE points to consider when determining if the parts of the ignition system should be replaced.

e. Does the capacitor deliver a constant and strong enough current?
f. Is all the contact points firmly fixed?
g. Is there a possible leakage in either the high tension or low tension wires?
h. Are the gaps of the points correctly set?
i. Are the points badly burnt?
j. Is the rotor arm worn?
k. Is the tip of the rotor badly burnt?
l. Are all the connections that runs from the coil to the rotor fixed?

32. What is the function of the spark-plug?

Provides a gap in the combustion chamber in order to allow the induced current to bridge this gap under high voltage, delivering a spark to ignite the fuel air mixture.

33. Why should the sparkplug spark at precisely the right moment?

a. Ensures a proper ignition of the fuel.
b. If ignition timing is advanced the combustion takes place before the piston reaches TDC.
c. If ignition timing is retarded the spark will be delivered after the piston reaches TDC.

34. PRACTICAL LESSON

Setting timing with the aid of a neon timing light.

a. Engine must run.
b. Attach the timing light to high tension lead no 1.
c. Remove the vacuum advance mechanism.
d. Adjust the idling speed according to specifications.
e. Direct the timing light on the ignition timing marks of the engine.
f. Loosen the clamp bolt of the distributor.
g. Turn the distributor until the timing marks coincide with the manufacturer's instructions.

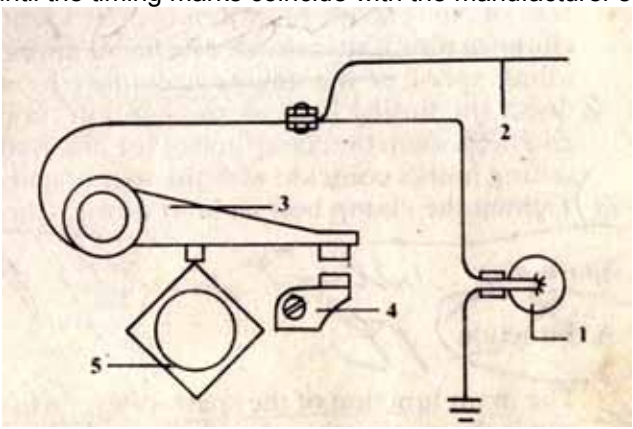

1. Timing light.
2. Low voltage conductor.
3. Moving breaker points.
4. Fixed breaker points.
5. Breaker cam.

35. In which THREE instances should you remove a spark-plug?

a. For inspection and cleaning.
b. When replacing.
c. When doing a compression test.

36. Name FIVE symptoms of typical ignition problems.

a. Engine starts with difficulty.
b. Engine runs unevenly.
c. Vehicle runs jerkily.
d. Little power.
e. Engine idles slowly.
f. Blackish smoke at exhaust.

37. Function of a fuse in the circuit of a motor vehicle.

Protects electrical components and circuits from short circuits and accidental overloads.

38. The electrical circuit of a motorcar, as shown beneath, consists of certain essential basic parts.

These parts have a crucial function and the motorcar cannot work properly if these parts are broken or damaged. It is thus important for a person to understand the function and working of these parts.

1 Label the sketch from A to G?

a. Battery/Accumulator.
b. Ignition switch.
c. Self starter.
d. Alternator.
e. High voltage coil.
f. Distributor.
g. Sparkplug.

2 What is the function of the part labelled as C?

Starts the engine of a vehicle.

3 Which type of fuel will this type of engine use as indicated in the sketch, and support your answer?

Petrol.

Sparkplugs are used for ignition.

39. The sketch beneath shows the wiring diagram of a coupling between a vehicle and a trailer, caravan, boat etc. Male and Female coupling.

Wiring diagram

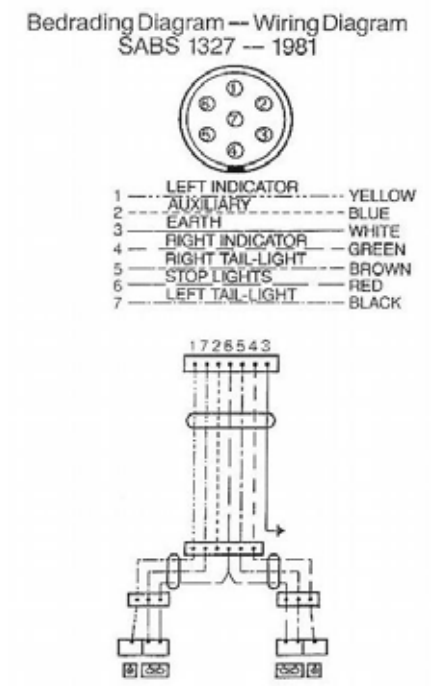

Standard trailer wiring diagram SABS 1327-1981

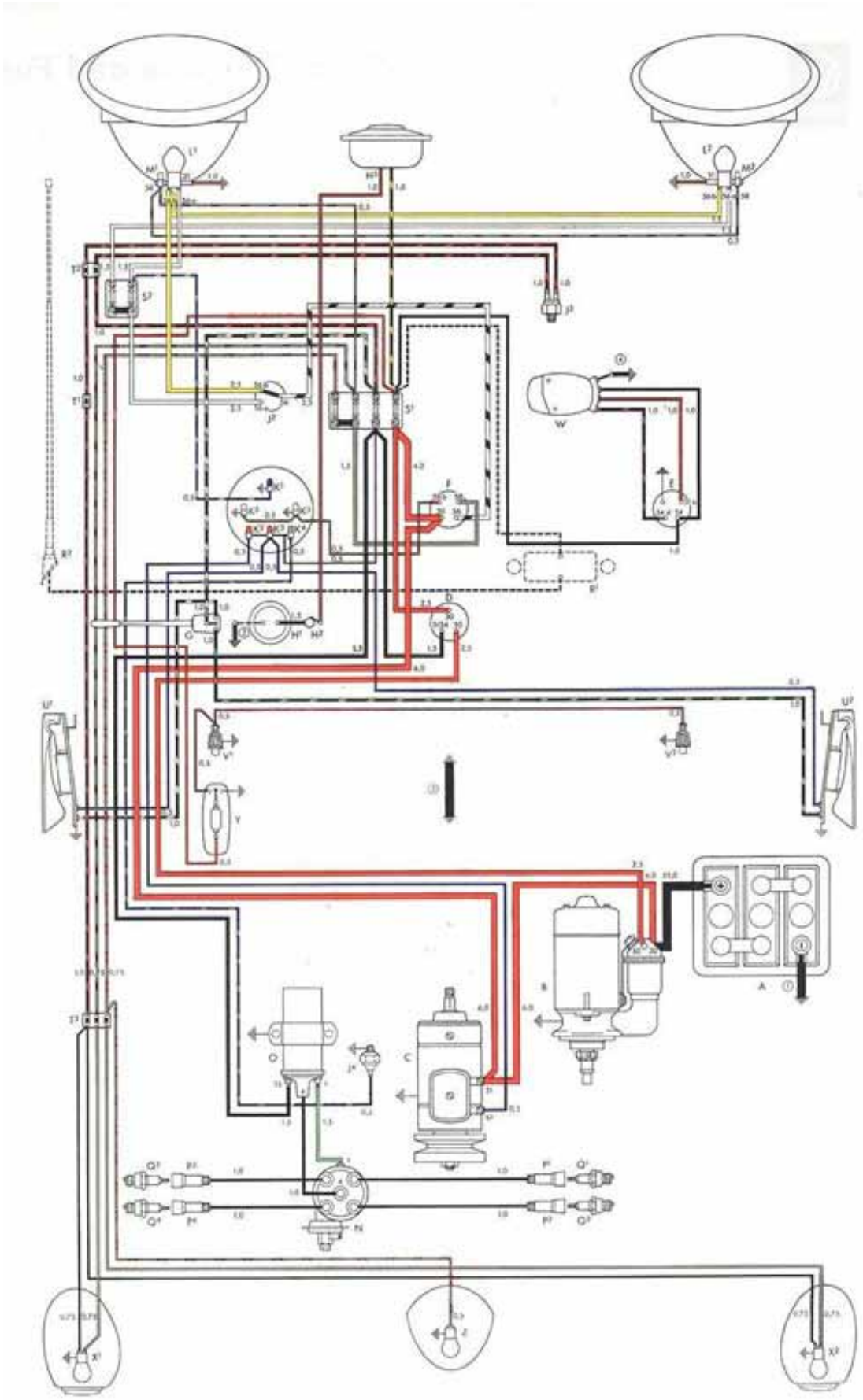

CHAPTER 4

SKILLS AND CONSTRUCTION PROCESSES

WELDING

ARC WELDING

1. Safety clothes, equipment

Study the sketch below and answer the question that follows:

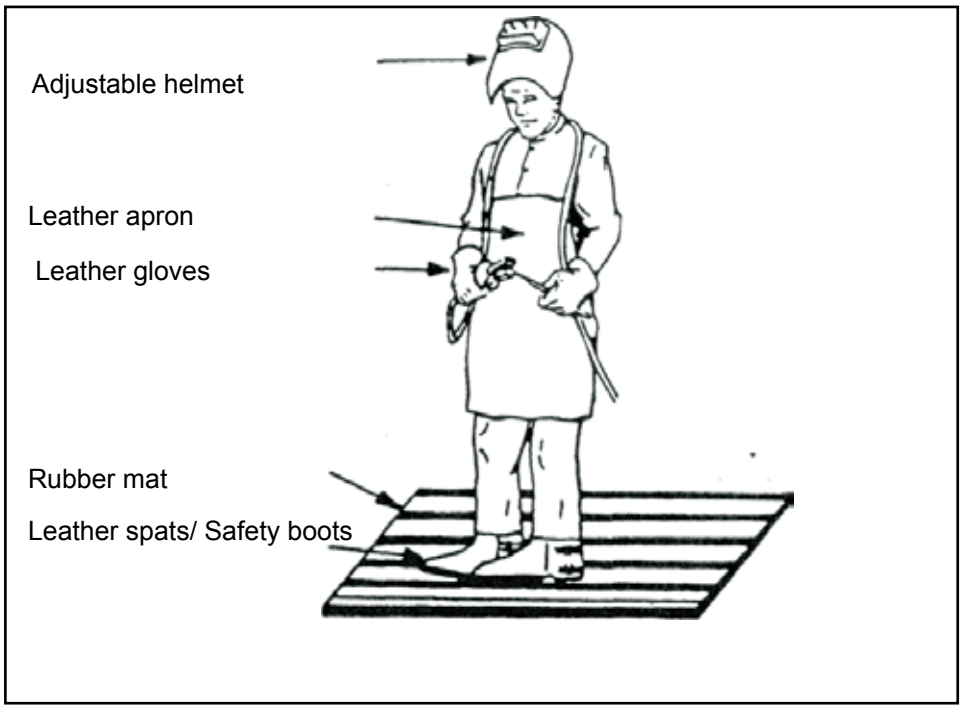

1.1 Name the serious effects that ultraviolet rays have on the human body?

- Burns the skin
- May cause cancer
- Can cause sterility

What is the purpose of wearing safety goggles; welding helmet and a overall when welding or chipping slag?

SAFETY GOGGLES must be worn to protect the eyes when chipping slag or grinding metal.

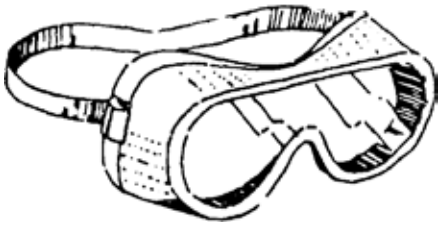

A WELDING HELMET is necessary to protect the face and eyes from the rays of the electric arc. It also protects the face and eyes from the heat and spatter of molten metal. The helmet is made in a black colour to minimise reflection of light. The glass is a dark colour to protect the eyes from arc rays and sparks. The welder's eyes can be damaged if they are exposed to direct arc rays.-The helmet band is adjustable to fit the head.

3 Overall

A LONG SLEEVED OVERALL made of tough material must be worn to protect you from hot metal and sparks while welding.

2. SAFETY PRECAUTIONS

Whenever you are going to weld make sure that you observe the following safety precautions :

a. 1. Always stand on a RUBBER MAT when arc welding as this protects you from an electric shock. Where there are no rubber mats available, shoes with -rubber soles should be worn. This is particularly important in damp areas.
b. 2. Always make sure that the floor area is DRY, as electric shocks can be experienced if the floor is wet.
c. 3. Make sure there are no INFLAMMABLE MATERIALS that can burn easily nearby, as the sparks from the welding could cause a fire or an explosion.
d. 4. Good VENTILATION is necessary so that you can breathe more easily.
e. 5. Always protect the eyes of fellow workmen from the arc rays with canvas or special WELDING SCREENS.

3. Name NINE hazards of arc welding.

a. Never work with a welder of which the power supply is not connected to the earth leakage circuit breaker.
b. Never weld when standing in water.
c. Electrode holder must be thoroughly insulated.
d. Keep flammable materials away from flying sparks.
e. A helmet with clear glass must be worn to protect the eyes from flying slag.
f. A visor with dark filter glasses that fits over the clear glasses must be worn to protect the user against ultraviolet rays when welding.
g. It is extremely dangerous to look at flame with uncovered eyes when welding. It can lead to painful arc eyes or even blindness.
h. Caution must be taken when welding any drums. Explosive gasses or substances can lead to explosions.
i. Certain metals such as copper, manganese steel and galvanized metals emit poisonous vapours when welded.

4. Name the TWO types of electric current that can be used to weld with.

a) Alternating current. (AC) Transformer welders. Suitable for all ferrous metals gives a smoother finish, and transformer is cheaper.

b) Direct current. (DC) Generator welders. Welds non-ferrous metals.

c) Inverter welder (DC) Transformer welder: Transform AC to DC. Suitable for ferrous and non - ferrous metals

5 Briefly explain the welding term ‘tacking’

Preliminary weld at the ends of the welded work piece to ensure that the work pieces do not move apart because of the high welding temperature when welded.

6 Study the sketch below of a machine that is used on all farms where electricity is available to manufacture or repair articles. Answer the questions that follow:

1 Label the sketch from A to D.

A Crocodile clamp/Earth clamp.
B Electrode
C Rheostat.
D Transformer.

2 Discuss the function of the part labelled as C.

To set the welding current by increasing or decreasing the amperage of the welding machine, when thicker or thinner metal are welded.

3 Name the device that is used to hold the welding rod in position when welding, and provide one reason why this device must be thoroughly insulated.

Electrode holder.

To prevent the user from sustaining an electric shock when welding.

7. Describe an electrode/welding rod shortly.

a. An electrode is a filler rod by means of which a joint is made.
b. Consists of a metal rod covered with an insulating material called flux.
c. The purpose of the coating is to: a) Stabilize the current.
d. Melt away impurities.
e. Help to form slag.
f. Help speed up the welding process.

8. What is the purpose of the slag that is formed on the welding run?

a. Protects the molten metal against pollution by the air.
b. Prevents the weld from cooling too fast.
c. Brings about an even weld.
d. (Slag must be removed after welding with a chipping hammer)

9 Tabulate the different defects that can occur on electrodes and give the effect of each defect.

Defect	Effect
A. Tip of electrode covered with sulating material.	No arc can be struck.
B. Colour code absent or indistinct.	Difficult to select correct rod for a specific metal
C. Rod coating absent.	1. Current cannot be stabilized. 2. Impurities on the surface of the metal cannot be melted away. 3. Slag cannot be formed. 4. Melting time is retarded. 5. An even weld not possible. 6. Protecting arc cannot be obtained.

10. Name TWO effects that poor storing conditions can have on electrodes.

    a. Rusting of electrode.
    b. Damaging of the coating.

11. Describe each of the following shortly:

    a. Arc.
       Flame or spark that is formed between the tip of the electrode and the metal that has to be welded.
    b. Shielded arc.
       Blue gas that forms around the arc when welding.
    c. Welding bead.
       Puddle of melted metal that forms directly below the electrode when an arc is struck.
    d. Penetration.
       When the metal that is being welded is melted and the welding rod penetrates the welded object.
    e. Slag.
       Covering formed over the welded area during welding.
    f. Flux.
       Covers the welding rod.
    g. Tag weld.
       Welding the ends of two pieces that has to be welded to prevent them from moving apart when you start welding.
    h. Bead.
       A series of weld pods is called a bead.
    i. Chipping hammer.
       Remove slag from weld after welding.

12. Describe shortly the process of striking an arc.

    a. Make sure the earth cable clamp makes thoroughly contact with the welding table/work piece.
    b. Use a electrode with the correct diameter that correspond with the thickness of the work piece.
    c. Adjust the amperage of the welding machine according to the Table.
    d. Cover your eyes with a welding helmet.
    e. Start the weld by making a scratching movement with the welding rod.
    f. A crackling noise is a sign that the weld runs smoothly.
    g. Make a zigzag movement with the electrode.
    h. When the electrode gets stuck, bend the electrode back and lift it up.
    i. Finish the weld and remove the slag with a chipping hammer.

13. Draw a sketch of the arc.

    a. Coating.
    b. Nucleus of electrode.
    c. Molten metal.
    d. Molten flux.
    e. Shielding gas.
    f. Solidified flux.
    g. Electric arc.
    h. Molten puddle.

14. Describe the process of arc welding.

Electric welding is a process of fusion in which electrical energy in the form of an arc is used to supply the necessary heat for the metals to fuse.

15 Name the welding defects sketch each one and give the causes of each.

Insufficient penetration - **causes**

a) Torch flame too small or amperage too low

b) Wrong welding technique

c) Improper join preparation

Welding crater - **causes**

a) Too big a flame or too high an arc current

b) Incorrect welding technique

c) Too thin electrode or rod

Undercutting - **causes**

a) Too high an amperage/current or too a high flame

b) Wrong angle of electrode

c) Wrong angle of torch

Inclusion of slag - **causes**

a) The arc current is too low

b) Slag is not removed completely after each weld

c) Wrong angle of electrode

d) Faulty preparation of join

Insufficient penetration - **causes**

a) Too small root gap

b) Arc current too low or torch flame too small

c) Electrode or rod too heavy

Gas holes- **causes**

a) Dirty metal

b) Base metal is melted too fast

c) Welding metal is cooled down too quickly

Porosity - **causes**

a) Too high an arc current or too big a torch flame

b) Too sudden removal of arc or torch causes the melted c) Metal to be attacked by atmospheric gases

d) Incorrect electrode or rod

Adhesion- **causes**

a) Incorrect welding technique

b) Incorrect electrode or rod

Concave welds - **causes**

a) Too little welding material put down

b) Too big a torch flame or too high an arc current

Unequal leg lengths - **causes**

a) Incorrect angle of electrode

b) Incorrect angle of torch nipple.

Soft soldering

Soldering is a process in which two or more metal items are joined together by melting and flowing a filler metal (solder) into the joint, the filler metal having a lower melting point than the workpiece. Soldering differs from welding in that soldering does not involve melting the work pieces.

There are three forms of soldering, each requiring higher temperatures and each producing an increasingly stronger joint strength:

a. soft soldering, which originally used a tin-lead alloy as the filler metal,
b. silver soldering, which uses an alloy containing silver,
c. brazing which uses a brass alloy for the filler.

The alloy of the filler metal for each type of soldering can be adjusted to modify the melting temperature of the filler. Soldering appears to be a hot glue process, but it differs from gluing significantly in that the filler metals alloy with the workpiece at the junction to form a gas- and liquid-tight bond.[1]

Soft soldering is characterized by having a melting point of the filler metal below approximately 400 °C (752 °F),[2] whereas silver soldering and brazing use higher temperatures, typically requiring a flame or carbon arc torch to achieve the melting of the filler. Soft solder filler metals are typically alloys (often containing lead) that have liquidus temperatures below 350°C.

In the soldering process, heat is applied to the parts to be joined, causing the solder to melt and to bond to the workpieces in an alloying process called wetting. In stranded wire, the solder is drawn up into the wire by capillary action in a process called ‘wicking’. Capillary action also takes place when the workpieces are very close together or touching. The joint strength is dependent on the filler metal used, where soft solder is the weakest and the brass alloy used for brazing is the strongest. Soldering, which uses metal to join metal in a molecular bond has electrical conductivity and is water- and gas-tight. There is evidence that soldering was employed up to 5000 years ago in Mesopotamia.[3]

Origins

Soldering and brazing are thought to have arisen very early in the history of metal-working, probably before 4000 BCE [2]. Sumerian swords from ~3000 BCE were assembled using hard soldering.

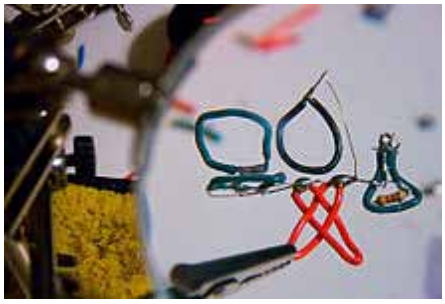

Small figurine being created by soldering

Soldering was historically used to make jewelry items, cooking ware and tools, as well as other uses such as in assembling stained glass.

Applications

Currently, the two most common uses of soldering are in plumbing and in electronics where it is used to connect electrical wiring and to connect electronic components to printed circuit boards (PCBs). It provides reasonably permanent but reversible connections between copper pipes in plumbing systems as well as joints in sheet metal objects such as food cans, roof flashing, rain gutters and automobile radiators. Jewelry components, machine tools and some refrigeration and plumbing components are often assembled and repaired by the higher temperature silver soldering process. Small mechanical parts are often soldered or brazed as well. Soldering is also used to join lead came and copper foil in stained glass work. It can also be used as a semi-permanent patch for a leak in a container or cooking vessel.

Each form of solder offers advantages and disadvantages. Soft soldering uses the lowest temperatures but it is not a strong join and should not be used for load-bearing applications. It also cannot withstand elevated temperatures and as such is typically restricted to normal ambient temperatures and below. Silver soldering, as used by jewelers, machinists and in some plumbing applications, requires the use of a torch or other high temperature source and is much stronger than soft soldering. Brazing provides the strongest joint but also requires the hottest temperatures to melt the filler metal, requiring a torch or other high temperature source and darkened goggles to protect the eyes from the bright light produced by the heat of the work. It is often used to repair cast iron objects, wrought iron furniture, etc.

Some examples of soft-solder types and their applications include tin-lead (general purpose), tin-zinc for joining aluminium, lead-silver for strength at higher than room temperature, cadmium-silver for strength at high temperatures, zinc-aluminium for aluminium and corrosion resistance, and tin-silver and tin-bismuth for electronics.

Solders

Soldering filler materials are available in many different alloys for differing applications. In electronics assembly, the eutectic alloy of 63% tin and 37% lead (or 60/40, which is almost identical in performance to the eutectic) has been the alloy of choice. Other alloys are used for plumbing, mechanical assembly, and other applications.

A eutectic formulation has several advantages for soldering; chief among these is the coincidence of the liquidus and solidus temperatures, i.e. the absence of a plastic phase. This allows for quicker wetting as the solder heats up, and

quicker setup as the solder cools. A non-eutectic formulation must remain still as the temperature drops through the liquidus and solidus temperatures. Any differential movement during the plastic phase may result in cracks, giving an unreliable joint. Additionally, a eutectic formulation has the lowest possible melting point, which minimizes heat stress on electronic components during soldering.

Common solder alloys are mixtures of tin and lead, respectively:

- 63/37: melts at 183 °C (361 °F) (eutectic: the only mixture that melts at a point, instead of over a range)
- 60/40: melts between 183–190 °C (361–374 °F)
- 50/50: melts between 185–215 °C (365–419 °F)

For environmental reasons (and the introduction of regulations such as the European RoHS (Restriction of Hazardous Substances Directive)) lead-free solders are becoming more widely used. They are also suggested anywhere young children may come into contact with (since young children are likely to place things into their mouths), or for outdoor use where rain and other precipitation may wash the lead into the groundwater. Unfortunately, most lead-free solders are not eutectic formulations, melting at around 250 °C (482 °F), making it more difficult to create reliable joints with them.

Other common solders include low-temperature formulations (often containing bismuth), which are often used to join previously-soldered assemblies without un-soldering earlier connections, and high-temperature formulations (usually containing silver) which are used for high-temperature operation or for first assembly of items which must not become unsoldered during subsequent operations. Alloying silver with other metals changes the melting point, adhesion and wetting characteristics, and tensile strength. Of all the brazing alloys, brazing has the greatest strength, with silver solders not being substantially stronger than soft solder and having the broadest applications.[4] Specialty alloys are available with properties such as higher strength, better electrical conductivity and higher corrosion resistance.

Flux

The purpose of flux is to facilitate the soldering process. The obstacle to a successful solder joint is an impurity at the site of the union, e.g. dirt, oils or oxidation. The impurities can be removed by mechanical cleaning or by chemical means, but the elevated temperatures required to melt the filler metal (the solder) encourages the work piece (and the solder) to re-oxidize. This effect is accelerated as the soldering temperatures increase and can completely prevent the solder from joining to the workpiece. One of the earliest forms of flux was charcoal, which acts as a reducing agent and helps prevent oxidation during the soldering process. Some fluxes go beyond the simple prevention of oxidation and also provide some form of chemical cleaning (corrosion).

For many years, the most common type of flux used in electronics (soft soldering) was rosin-based, using the rosin from selected pine trees. It was ideal in that it was non-corrosive and non-conductive at normal temperatures but became mildly reactive (corrosive) at the elevated soldering temperatures. Plumbing and automotive applications, among others, typically use an acid-based (muriatic acid) flux which provides cleaning of the joint. These fluxes cannot be used in electronics because they are conductive and because they will eventually dissolve the small diameter wires. Many fluxes also act as a wetting agent in the soldering process,[5] reducing the surface tension of the molten solder and causing it to flow and wet the workpieces more easily.

Fluxes for soft solder are currently available in three basic formulations:

1. Water-soluble fluxes (no VOC's required for removal) are higher activity fluxes designed to be removed with water after soldering.
2. No-clean fluxes which are mild enough to not "require" removal due to the non-conductive and non-corrosive residue.[1] Performance of the flux needs to be carefully evaluated; a very mild 'no-clean' flux might be

perfectly acceptable for production equipment, but not give adequate performance for a poorly controlled hand-soldering operation. They are so-called “no-clean” because the residue left after the solder operation is non-conductive and won’t cause electrical shorts; nevertheless these fluxes leave a white-color residue like dilute bird-droppings. which is plainly visible. Since the presence of foreign matter, detritus, even lint, on circuit boards is a defect for all three classes of electronic circuit boards (ranging from cheap consumer electronics to high-reliability, mission critical applications), these sorts of fluxes must still be cleaned as with all hand solder work, typically brushing with 99% isopropyl alcohol as the solvent and lint-free non-synthetic (eg cotton) wipes.

3. Traditional rosin fluxes are available in non-activated (R), mildly activated (RMA) and activated (RA) formulations. RA and RMA fluxes contain rosin combined with an activating agent, typically an acid, which increases the wettability of metals to which it is applied by removing existing oxides. The residue resulting from the use of RA flux is corrosive and must be cleaned off the piece being soldered. RMA flux is formulated to result in a residue which is not significantly corrosive, with cleaning being preferred but optional.

Processes

Soldering operations can be performed with hand tools, one joint at a time, or en masse on a production line. Hand soldering is typically performed with a soldering iron, soldering gun, or a torch, or occasionally a hot-air pencil. Sheetmetal work was traditionally done with “soldering coppers” directly heated by a flame, with sufficient stored heat in the mass of the soldering copper to complete a joint; torches or electrically-heated soldering irons are more convenient. All soldered joints require the same elements of cleaning of the metal parts to be joined, fitting up the joint, heating the parts, applying flux, applying the filler, removing heat and holding the assembly still until the filler metal has completely solidified. Depending on the nature of flux material used, cleaning of the joints may be required after they have cooled.

The distinction between soldering and brazing is arbitrary and often misunderstood, with some choosing to make each type a separate category, though the only distinction is the alloy of the filler metal (the solder) and the temperature at which it melts. Soft soldering can be done with a heated iron whereas the other methods require a higher temperature to melt the solder than can be achieved with a heated iron. Soldering, by definition, is the use of a filler metal to join workpieces and, as such, encompasses soft soldering, “hard” soldering (silver soldering) and brazing. The word brazing comes from the type of solder that is used for that soldering process—a brass alloy. The term silver solder likewise denotes the type of solder that is used. Soft solder comes from the fact that lead was a primary ingredient and is a soft metal. Each alloy has characteristics that work best for certain applications, notably strength and conductivity, and each type of solder and alloy has different melting temperatures. (There are some soft solders sold as “silver” solder because they contain a small fraction of silver.) Lead based solders should not be used on precious metals because the lead dissolves the metal into itself and disfigures it. A temperature of 450 °C is usually used as a practical delineating point between soft solder and hard solder and brazing alloys require even higher temperatures. Different equipment and/or fixturing is usually required since (for instance) a soldering iron cannot achieve high enough temperatures for hard soldering or brazing. Practically speaking there is a significant difference between the processes — brazing solders have more structural strength than silver solder, which has more strength than soft solder. Brazing solders are formulated primarily for strength, silver solder is used by jewelers to protect the precious metal and by machinists and refrigeration technicians for its strength but lower melting temperature than brazing, and the primary benefit of soft solder is the low temperature used (to prevent heat damage to electronic components and insulation). Since the joint is produced using a metal with a lower melting temperature than the workpiece, the joint will weaken as the ambient temperature approaches the melting point of the filler metal. For that reason, the higher temperature processes produce joints which are effective at higher temperatures. Brazed connections can be as strong or nearly as strong as the parts they connect,[6][7] even at elevated temperatures.[8]

“Hard soldering” or “silver soldering” (performed with high-temperature solder containing up to 40% silver) is also often considered a form of brazing, since it involves filler materials with melting points in the vicinity of, or in excess of, 450 °C. Although the term “silver soldering” is used much more often than “silver brazing”, it may be technically incorrect depending on the exact melting point of the filler in use. In silver soldering (“hard soldering”), the goal is generally to give a beautiful, structurally sound joint, especially in the field of jewelry. Thus, the temperatures involved, and the usual use of a torch rather than an iron, would seem to indicate that the process should be referred to as “brazing” rather than “soldering”, but the endurance of the “soldering” appellation serves to indicate the arbitrary nature of the distinction (and the level of confusion) between the two processes.

Induction soldering is a process which is similar to brazing. The source of heat in induction soldering is induction heating by high-frequency AC current in a surrounding copper coil. This induces currents in the part being soldered, heat then being generated by resistive heating. The copper rings can be made to fit the part needed to be soldered for precision in the work piece. Induction soldering is a process in which a filler metal (solder) is placed between the facing surfaces of (to be joined) metals. The filler metal in this process is melted at a fairly low temperature. Fluxes are commonly used in induction soldering. This is a process which is particularly suitable for soldering continuously. The process is usually done with coils that wrap around a cylinder/pipe that needs to be soldered.

Some metals are easier to solder than others. Copper, silver, and gold are easy. Iron, mild steel and nickel are found to be more difficult. Because of their thin, strong oxide films, stainless steel and aluminium are even more difficult. Titanium, magnesium, cast irons, some high-carbon steels, ceramics, and graphite can be soldered but it involves a process similar to joining carbides. They are first plated with a suitable metallic element that induces interfacial bonding.

Electronic components (PCBs)

A tube of multicore electronics solder used for manual soldering

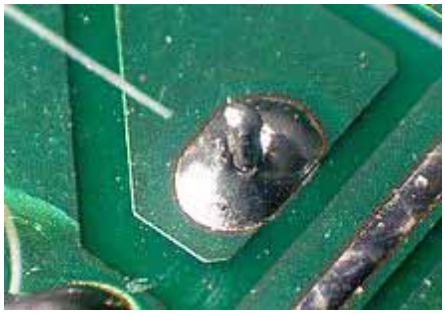

An improperly soldered ‘cold’ joint

Broken solder joints on a flyback transformer

Currently, mass-production printed circuit boards (PCBs) are mostly wave soldered or reflow soldered, though hand soldering of production electronics is also still standard practice for many tasks.

Pipe soldering

soldered copper pipes

Copper pipe, or ‘tube’, is commonly joined by soldering. When applied in a plumbing trade context, soldering is more often referred to as sweating and a tubing connection so made is referred to as a sweated joint.

Copper conducts heat away much faster than a soldering iron or gun can provide, so a propane torch is most commonly used to deliver the necessary BTUs per minute; for large tubing sizes and fittings a MAPP†-fueled, acetylene-fueled, or propylene-fueled torch is used with atmospheric air as the oxidizer; MAPP†/oxygen or acetylene/oxygen are rarely used because the flame temperature is much higher than the melting point of copper. Too much heat destroys the temper of hard-tempered copper tubing, and can burn the flux out of a joint before the solder is added, resulting in a faulty joint. For larger tubing sizes, a torch fitted with various sizes of interchangeable swirl tips is employed to deliver the needed BTUs/minute.

Most experienced plumbers seldom use propane fuel. In the hands of a skilled tradesman, the hotter flame of acetylene, MAPP, or propylene allows more joints to be completed per hour.

†True MAPP gas has not been produced or sold in North American since 2008 when the last plant producing the fuel closed. The yellow canisters available in hardware stores, while labeled MAPP, are MAPP substitutes that burns at a somewhat cooler temperature.

Solder fittings, which are short sections of smooth pipe designed to slide over the outside of the mating tube, are usually used for copper joints. There are two types of fittings: end feed fittings which contain no solder, and solder ring fittings, in which there is a ring of solder in a small circular recess inside the fitting.

As with all solder joints, all parts to be joined must be clean and oxide free. Internal and external wire brushes are available for the common pipe and fitting sizes; emery cloth and wire-wool are frequently used as well, although metal wool products are discouraged, as they can contain oil, which would contaminate the joint.

Because of the size of the parts involved, and the high activity and contaminating tendency of the flame, plumbing fluxes are typically much more chemically active, and more acidic, than electronic fluxes. Because plumbing joints may be done at any angle, even upside down, plumbing fluxes are generally formulated as pastes which stay in place better than liquids. Flux should be applied to all surfaces of the joint, inside and out. Flux residues should be removed after the joint is complete or they can, eventually, erode through the copper substrates and cause failure of the joint.

Many plumbing solder formulations are available, with different characteristics such as higher or lower melting temperature, depending on the specific requirements of the job. Building codes currently almost universally require the use of lead-free solder for potable water piping, though traditional tin-lead solder is still available. Studies have shown that lead-soldered plumbing pipes can result in elevated levels of lead in drinking water.[13][14]

Since copper pipe quickly conducts heat away from a joint, great care must be taken to ensure that the joint is properly heated through to obtain a good bond. After the joint is properly cleaned, fluxed and fitted, the torch flame is applied to the thickest part of the joint, typically the fitting with the pipe inside it, with the solder applied at the gap between the tube and the fitting. When all the parts are heated through, the solder will melt and flow into the joint by capillary action. The torch may need to be moved around the joint to ensure all areas are wetted out. However, the installer must take care to not overheat the areas being soldered. If the tube begins to discolor it means that the tube has been over-heated and is beginning to oxidize, stopping the flow of the solder and causing the soldered joint not to seal properly. Before oxidation the molten solder will follow the heat of the torch around the joint. When the joint is properly wetted out, the solder and then the heat are removed, and while the joint is still very hot, it is usually wiped with a dry rag. This removes excess solder as well as flux residue before it cools down and hardens. With a solder ring joint, the joint is heated until a ring of molten solder is visible around the edge of the fitting and allowed to cool.

Solder connections are usually considered the most difficult of the three methods of connecting copper tubing, but soldering copper is a very simple process, provided some basic conditions are provided:

- The tubing and fittings must be cleaned to bare metal with no tarnish
- Any pressure which is formed by heating of the tubing must have an outlet

Copper is only one material that is joined in this manner. Brass fittings are often used for valves or as a connection fitting between copper and other metals. Brass piping is soldered in this manner in the making of brass and some woodwind (saxophone and flute) musical instruments

Mechanical and aluminium soldering

A number of solder materials, primarily zinc alloys, are used for soldering aluminium metal and alloys and to some lesser extent steel and zinc. This mechanical soldering is similar to a low temperature brazing operation, in that the mechanical characteristics of the joint are reasonably good and it can be used for structural repairs of those materials.

Resistance soldering is soldering in which the heat required to flow the solder is created by passing an electric current through the solder. When current is conducted through a resistive material a certain level of heat is generated. By regulating the amount of current conducted and the level of resistance encountered, the amount of heat produced can be predetermined and controlled.

Solderability

The Solderability of a substrate is a measure of the ease with which a soldered joint can be made to that material.

Desoldering and resoldering

Used solder contains some of the dissolved base metals and is unsuitable for reuse in making new joints. Once the solder's capacity for the base metal has been achieved it will no longer properly bond with the base metal, usually resulting in a brittle cold solder joint with a crystalline appearance.

It is good practice to remove solder from a joint prior to resoldering—desoldering braids or vacuum desoldering equipment (solder suckers) can be used. Desoldering wicks contain plenty of flux that will lift the contamination from the copper trace and any device leads that are present. This will leave a bright, shiny, clean junction to be resoldered.

The lower melting point of solder means it can be melted away from the base metal, leaving it mostly intact, though the outer layer will be "tinned" with solder. Flux will remain which can easily be removed by abrasive or chemical processes. This tinned layer will allow solder to flow into a new joint, resulting in a new joint, as well as making the new solder flow very quickly and easily.

Soldering defects

Various problems may arise in the soldering process which lead to joints which are non functional either immediately or after a period of use.

The most common defect when hand-soldering results from the parts being joined not exceeding the solder's liquidus temperature, resulting in a "cold solder" joint. This is usually the result of the soldering iron being used to heat the solder directly, rather than the parts themselves. Properly done, the iron heats the parts to be connected, which in turn melt the solder, guaranteeing adequate heat in the joined parts for thorough wetting. In 'electronic' hand soldering solder the flux is embedded in the solder. Therefore heating the solder first may cause the flux to evaporate before it cleans the surfaces (pcb pad and component connection) being soldered.

An improperly selected or applied flux can cause joint failure, or if not properly cleaned off the joint, may corrode the metals in the joint over time and cause eventual joint failure. Without flux the joint may not be clean, or may be oxidized, resulting in an unsound joint.

In electronics non-corrosive fluxes are often used. Therefore cleaning flux off may merely be a matter of aesthetics or to make visual inspection of joints easier in specialised 'mission critical' applications such as medical devices, military and aerospace i.e. satellites. For satellites also to reduce weight slightly but usefully. In some conditions i.e. high

humidity, even non-corrosive flux might remain slightly active, therefore the flux may be removed to absolutely negate the possibility of corrosion over time. In some applications, the PCB might also be coated in some form of protective material such as a lacquer to protect it and/or exposed solder joints from the environment.

Movement of metals being soldered before the solder has cooled will cause a highly unreliable cracked joint. In electronics' soldering terminology this is known as a 'dry' joint. It has a characteristically dull or grainy appearance immediately after the joint is made, rather than being smooth, bright and shiny. This appearance is caused by crystallization of the liquid solder. A dry joint is weak mechanically and a poor conductor electrically.

In general a good looking soldered joint is a good joint. As mentioned it should be smooth, bright and shiny. If not smooth i.e. lumps or balls of otherwise shiny solder the metal has not 'wetted' properly. Not being bright and shiny suggests a weak 'dry' joint. However, technicians trying to apply this guideline when using lead-free solder formulations may experience frustration, because these types of solders readily cool to a dull surface even if the joint is good. The solder looks shiny while molten, and suddenly hazes over as it solidifies even though it has not been disturbed during cooling.

In electronics a 'concave' fillet is ideal. This indicates good wetting and minimal use of solder (therefore minimal heating of heat sensitive components). A joint may be good, but if a large amount of unnecessary solder is used then more heating is obviously required. Excessive heating of a PCB may result in 'delamination', the copper track may actually lift off the board, particularly on single sided PCBs without 'through hole' plating.

In the joining of copper tube, failure to properly heat and fill a joint may lead to a 'void' being formed. This is usually a result of improper placement of the flame. If the heat of the flame is not directed at the back of the fitting cup, and the solder wire applied 180 degrees opposite the flame, then solder will quickly fill the opening of the fitting, trapping some flux inside the joint. This bubble of trapped flux is the void; an area inside a soldered joint where solder is unable to completely fill the fittings' cup, because flux has become sealed inside the joint, preventing solder from occupying that space.

Tools

Hand-soldering tools include the electric soldering iron, which has a variety of tips available ranging from blunt to very fine to chisel heads for hot-cutting plastics, and the soldering gun, which typically provides more power, giving faster heat-up and allowing larger parts to be soldered. Hot-air guns and pencils allow rework of component packages which cannot easily be performed with electric irons and guns.

Soldering torches are a type of soldering device that uses a flame rather than a soldering iron tip to heat solder. Soldering torches are often powered by butane[21] and are available in sizes ranging from very small butane/oxygen units suitable for very fine but high-temperature jewelry work, to full-size oxy-fuel torches suitable for much larger work such as copper piping. Common multipurpose propane torches, the same kind used for heat-stripping paint and thawing pipes, can be used for soldering pipes and other fairly large objects either with or without a soldering tip attachment; pipes are generally soldered with a torch by directly applying the open flame.

A soldering copper is a tool with a large copper head and a long handle which is heated in a blacksmith's forge fire and used to apply heat to sheet metal for soldering. Typical soldering coppers have heads weighing between one and four pounds. The head provides a thermal mass, which can store enough heat for soldering large areas between re-heating the copper in the fire. The larger the head, the longer the working time it affords. Historically, soldering coppers were a standard tool used in auto bodywork, although body solder has been mostly superseded by spot welding for mechanical connection and non-metallic fillers for contouring.

Toaster ovens and hand held infrared lights have been used to reproduce production soldering processes on a much smaller scale.

Bristle brushes are usually used to apply plumbing paste flux. For electronic work, flux-core solder is generally used, but additional flux may be used from a flux pen or dispensed from a small bottle with a syringe-like needle.

Wire brush, wire wool and emery cloth are commonly used to prepare plumbing joints for connection. Electronic joints rarely require mechanical cleaning, though copper traces with a dark layer of oxide passivation (due to aging), as on a new prototyping board that has been on the shelf for about a year or more, may need to be polished to a shine with steel wool before being soldered.

For PCB assembly and rework, alcohol and acetone (one or the other) are commonly used with cotton swabs or bristle brushes to remove flux residue. A heavy rag is usually used to remove flux from a plumbing joint before it cools and hardens. A fiberglass brush can also be used. Some fluxes for electronics are designed to be stable and inactive when cool and do not need to be cleaned off, though they still can be if desired, while other fluxes are acidic and must be removed after soldering to prevent corrosion of the circuits.

A heat sink, such as a crocodile clip, can be used to prevent damaging heat-sensitive components while soldering. The heat sink limits the temperature of the component body by absorbing and dissipating heat (reducing the thermal resistance between the component and the air), while the thermal resistance of the leads maintains the temperature difference between the part of the leads being soldered and the component body so that the leads become hot enough to melt the solder while the component body remains cooler.

Soldering wires & connectors

Summary

Solder is applied with a hot soldering iron. Solder is available as solid or flux cored. Solid solder requires an external flux to be applied in the soldering process. The objective of this procedure is to show you how to correctly solder an electrical connection to an electrical wire.

Part 1. Preparation and safety

Objective

- Correctly solder an electrical connection to an electrical wire.

Personal safety

Whenever you perform a task in the workshop you must use personal protective clothing and equipment that is appropriate for the task and which conforms to your local safety regulations and policies. Among other items, this may include:

- Work clothing - such as coveralls and steel-capped footwear
- Eye protection - such as safety glasses and face masks
- Ear protection - such as earmuffs and earplugs
- Hand protection - such as rubber gloves and barrier cream
- Respiratory equipment - such as face masks and valved respirators

If you are not certain what is appropriate or required, ask your supervisor.

Safety check

- The soldering iron tip needs to be very hot in order to melt solder. Do not burn yourself with the soldering tip.
- Do not inhale the fumes that are released during the soldering process; they can irritate your respiratory system.
- If the soldering iron is electrically heated, do not use it while standing in water or engine coolant.
- Never apply solder to a live electrical circuit.
- Make sure that you understand and observe all legislative and personal safety procedures when carrying out the following tasks. If you are unsure of what these are, ask your supervisor.

Points to note

- Solder used in automotive electrical applications is an alloy typically made up of 60% tin and 40% lead. Solder needs to change from a solid state into liquid easily and return to its solid state quickly.
- Solder is available as solid or flux cored. Solid solder requires an external flux to be applied in the soldering process. Flux cored solder has a bead of flux through the center of the solder. Flux cored solder is also referred to as rosin cored solder
- Flux is needed to prevent the metals being joined from oxidizing when they are heated. Flux is normally acidic and needs to be removed after the soldering process so that the join does not corrode.
- Solder is applied with a hot soldering iron. The soldering iron is heated electrically or by an external source such as a butane or oxyacetylene torch.
- The soldering iron tip absorbs heat that is then applied to the materials to be joined. Once they are hot enough, solder is able to melt between the components.
- For a connection to be successful, the soldering iron needs to be “tinned”. The tinning process assists in transferring heat to the wire. The soldering iron tip is heated, and a small amount of solder is applied to the tip. Excess solder is removed with a cloth rag.
- The soldering iron tip is applied to the wire so heat is transferred to the wire. Do not apply too much heat or the insulation may melt.

Part 2: Step-by-step instruction

a. Safely position soldering iron

When using a soldering iron you must be careful not to burn yourself or any part of the vehicle you are working on. The tip of the soldering iron has to be hot enough to melt metal solder, so make sure it is in a safe position and not touching anything.

b. Prepare the wires to be joined

While the soldering iron is heating, remove an appropriate amount of the protective insulation from the wires. Always use a proper stripping tool that is in good condition. If you intend to seal the join with a heat shrink sleeve, cut a section of this tubular material long enough to overlap the cable insulation on both sides of the join and slide it over the end of one of the wires before joining them.

c. Join the wires mechanically

Twist the wires together to make a good mechanical connection between them. If there are impurities in the solder, and the wires are not directly touching each other, then although there may be a strong physical connection there may not be a good electrical connection. This is known as a 'dry joint'. It is also very important that the surfaces be very clean before soldering or there will be a poor connection.

d. Apply solder to splice

Use the soldering iron to gently heat up the wires and melt some solder. Place the soldering iron onto the joined wires to ensure that just enough solder runs smoothly into the wires. Be careful not to use too much solder and if you apply too much heat, you will melt the wire insulation. When you have finished soldering, clean any excess flux from the joint with a rag and a little solvent.

e. Sleeve the join

Once the electrical connection has been made, and it has cooled down enough for you to be able to handle it, slide the insulator sleeve cover over the join. There are different types of sleeving. The most popular type is shrink wrapped onto the join with a heat source. Another type contains a glue which when heated melts into and seals the joint. If there is no heat shrink sleeving available, then it is possible to seal and protect the splice with electrical insulating tape.

f. Check the connection length

To solder a wire to a terminal connector, you will get a better connection if you do not twist the wire strands together tightly before placing them through the terminal as this gives the terminal more surface area to come in contact with the wire when soldered. However, it can be difficult to insert the wires in the terminal if they are just loose strands, so twist them just enough to help you insert them cleanly. Place the bullet or terminal onto the wire to check that the stripped part of the wire does not extend beyond the insulated shoulder of the terminal. Then remove the wire from the terminal.

g. Apply solder

Give the wires a thin preparatory coating of solder. This is called 'tinning' the wires and helps to make the final connection. By using rosin or resin cored solder, it is unnecessary to prepare the surfaces with a flux material as this is incorporated into the core of the solder. Put the wire back in the terminal, and place the iron onto the terminal to get it hot enough to melt some more solder between the terminal and the tinned wire. Be careful not to use too much solder, and if you get the terminal too hot the wire insulation will start to melt.

h. Cover the terminal

Once the electrical connection has been made, and it has cooled down enough for you to be able to handle it, you can then place the insulator cover over the terminal and place the connection into service.

CHAPTER 5

TOOLS, EQUIPMENT AND IMPLEMENTS

Basic hand tools	Choose the right tool for the job. Otherwise you could damage the part you are working on, the tool, or yourself.
Hammers	The most common hammer in an automotive workshop is the ball pein or engineer's hammer. The soft-face & deadblow hammers are also used.
Chisels	The most common type of chisel is the flat chisel. You should always wear safety goggles when working with chisels.
Saws	Hacksaws are a common workshop tool. The frames come in a range of shapes and sizes. For any given frame there's a range of available hacksaw blades to cope with different materials and situations.
Screw-drivers	The correct screw-driver to use depends on the type of slot or recess in the head of the screw or bolt, and how accessible it is.
Vices & clamps	The bench vice is a plain vice that will hold anything that needs sawing, filing, or chiselling. The G-clamp holds parts together while they're being worked on.
Spanners	There are many types of spanners. The most common are the ring spanner, open end spanner & the combination spanner. Spanners will only do a job properly if it's the right size for the nut or the bolt to be turned.
Sockets & accessories	Sockets are a good choice where the top of the fastener is reasonably accessible. The socket fits onto it snugly and grips it on all six corners and is the type of grip needed on any nut or bolt that's extremely tight.
Pliers	Combination pliers are made from two pieces of high carbon or alloy steel. They pivot together so that any force applied to the handles is multiplied in the strong jaws. Most pliers are limited by their size in what they can grip. It is important to select the right type and size of pliers for the job.
Wrenches	A torque wrench tightens bolts and nuts. A pipe wrench grips pipes and tubes. Other specialised wrenches include the wheel brace & oil filter removing tool.
Files	There are many different types of files. What makes one file different from another is not just it's shape but how much material it's designed to remove with each stroke.
Torque wrenches	The torque wrench tightens bolts and nuts to a specified torque recommended by the manufacturer. Whilst manufacturers don't specify torque settings for every nut and bolt,when they do, it's important, and that's why the torque wrench is such an important tool.

1. Basic safety rules applicable to the handling of hand tools

2. Basic hand tools

Shifting spanner

Study the sketch below and answer the questions that follows:

1 This tool is very versatile. Name this tool, and give one reason for saying that this tool is versatile.

Shifting spanner.

The jaws can be set at the required size needed.

2 When using the tool you find that the movement of the jaws is very difficult. Give ONE lubricant that can be used on the mechanism of the tool to ensure smooth working of the part.

Oil/Silicon spray.

3 To protect the tool from rusting one must cover the tool with a protective covering/layer. This protective covering must be of a very durable and permanent nature.

Name one example of such a covering.

Electroplating.

3 Engineering Try Square.

The engineer's square is made of spring steel or cast steel hardened, tempered and ground to a high degree of accuracy. The stock is generally thicker than the blade. Squares are in different sizes from 150 mm to 300 mm. The size of the square is determined by the length of the blade.

The engineers try square is used to check the square ness of two lines or planes and to check that a surface is flat. The square consists of a blade and a short stock which form a 90° angle. Since the edges of the blade and stock are parallel, both outside and inside angles can be checked, as shown below.

3 Mitre Square.

A Mitre square is used for marking and testing angles of 45°

4. The flat square.

The flat square is used for sheet metal jobs when it can be laid flat on a large surface. The flat square is larger than the engineering square and it consists of a long arm called the body and a short arm called a tongue. The body and tongue are of equal thickness and form a 90° angle. The length of the body is calibrated from 0 to 600 mm and the tongue from 0 to 400 mm .

The square is used by the bricklayer when setting out and squaring of building foundations. The square must at all times be kept clean and free from dust and rust (especially when working with concrete).

5 The Scriber.

The scriber is usually made of high carbon steel, cast steel, spring steel, or hardened and tempered silver steel. The scriber is a hardened steel tool with a sharp point at both ends. One side is bent at an angle of 90° while the other end is straight. The centre portion is knurled to ensure a better grip.

6. Spirit Level.

The “Body” is made in varying lengths from either steel, cast iron, aluminium or wood, the bubble tube being of glass and nearly filled with alcohol, ether or methylated spirits. The main points to consider when selecting a level are:

- It should be as long as possible. The longer the level the more accurate it is.
- It should be strongly made to withstand occasional knocks.
- It should have a quick acting bubble.
- It should have openings in the sides so that the bubble can easily be seen at any height.

The bubble tube housing should be made adjustable to secure the accuracy of the level.

This tool is used for determining the horizontal plane, but, with the addition of another bubble set perpendicular to the edge of the level so that it can be used as a plumb rule when building walls. The level should be tested from time to time for accuracy.

7. The straight edge.

Straight edges are made of metal, and come in various sizes. The edges are both straight and parallel. Metal straight edges have one edge bevelled and are obtainable in two lengths,1m and 2m. They are 50 mm wide.

Straight edges are used in conjunction with a scriber when scribing straight lines. It is also used for testing flat surfaces and the edges of metal sheets. When not in use they should be hung on a nail from the hole provided at the one end.

8. The divider.

Made of steel, dividers are of two types: wing dividers and spring dividers. We will only discuss the spring divider.

Spring dividers are pivoted at one end and secured in position by means of a spring cup fitted over the top and clips on the two edges. Adjustment is made by means of a thumb nut or screw fixed to the one leg and passing through a pivot on the other leg. Turning the nut in a clockwise or anticlockwise direction open or closes the legs.

Spring dividers are used for scribing circles, arches and lines parallel to the base line on the material being marked off. They are also used for marking off given lengths, bisecting and dividing straight or curved lines into equal parts.

The legs are made of spring steel suitably hardened and tempered. The points must be kept sharp and the legs of equal length.

9 Centre punch.

The centre punch is used mostly for marking holes which have to be drilled, or to receive the point of a divider when scribing a circle.

PETROL/DIESEL ENGINES

Engine output

Engine output refers to the torque and power produced by an engine. The purpose of the engine is to provide the energy to drive the vehicle. Energy released by burning fuel and air in the cylinders produces a turning force or torque which drives the wheels.

Functions of oil

Summary

Oil reduces unwanted friction. It reduces wear on moving parts, and helps cool an engine. It also absorbs shock loads and acts as a cleaning agent.

One function of a lubrication system is to reduce friction. Friction occurs between all surfaces in contact. When moving surfaces come together, friction tends to slow them down.

Sometimes that's just what's wanted. Friction can be useful.

But it can also cause serious damage. It can make metal parts so hot they melt and fuse together. When that happens, an engine is said to have seized.

How long an engine lasts depends to a large extent on how well it's lubricated, especially at the points of extreme loading.

So lubrication reduces unwanted friction, and controls it where it is useful.

It reduces wear on moving parts. Clearances fill with oil so that engine parts move or float on layers of oil instead of directly on each other. Much less power is needed to move them and that's a plus.

It helps cool an engine. It collects heat from the engine, then returns to the sump, where it cools.

It helps absorb shock loads. A power stroke can suddenly put as much as 2 tonnes force on main bearings. Layers of oil cushion this loading.

Oil is also a cleaning agent. It collects particles of metal and carbon and carries them back to the sump. Larger pieces fall to the bottom.

21. Name the TWO types of tractor air filters.

    a. Oil bath air filter.

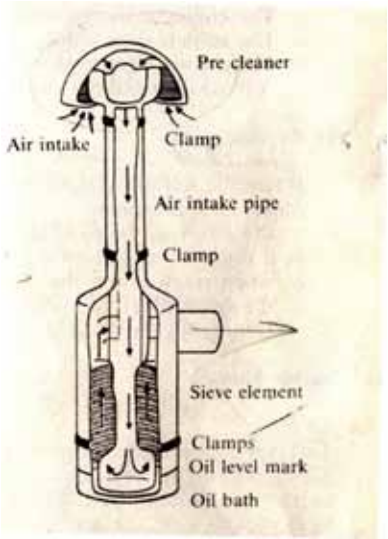

Dry element air filter.

22. What is the function of the pre-cleaner?

    Remove the worst dust particles from the air in order to prolong the cleaning

    of the oil bath.

23. Name TWO qualities of a good air filter.

    a. Remove all impurities from the air.
    b. Have sufficient capacity so that intervals between cleaning are of reasonable length.
    c. Let enough air through for engine.

24. Name FIVE general hints regarding tractor air filters.

    a. Tractor's air filter is an safety valve that must keep all dust out.
    b. Surface area of the paper element air cleaner must be large enough to purify the volume of air sucked into the engine.
    c. Two types of air cleaners must be used simultaneously on the tractor.
    d. All air pipes must be air tight.
    e. No exhaust gasses must enter the air cleaner.

25. What is the function of the fuel filter?

    Cleans the fuel that is pumped to the carburettor or diesel pump.

26. What is the function of the fuel pump?

    Pumps the fuel to the engine.

27. What is the function of a oil cleaner?

    Cleans the oil inside the engine.

28. What is the function of the ventilation/breather opening?

    The block of an engine is always fitted with a breather opening that brings the volume of air above the oil in the crankcase into contact with the atmosphere.

29. How can you trace for leakages on the radiator.

    a. Fill the radiator without spilling water.
    b. Replace the radiator cap securely.
    c. Let the engine run for 10 – 15 minutes.
    d. Switch of the engine and examine for leaks.

30. When will a radiator cap leak?

    a. When the rubber seal wears out.
    b. When the spiral spring rusts.
    c. Lost of tension in the spring.

31. Describe how a radiator rubber hose is removed and replaced.

    a. Drain the water from the radiator.
    b. Loosen the clamps at the end of the hose and remove them.
    c. Then remove the hose.
    d. Clean the surface of the metal pipes to which the pipes was fastened.
    e. Replace the worn hose.
    f. Place new clamps around the hose and fasten them.
    g. Fill the radiator with water.
    h. Start engine and run for 10 minutes.
    i. Test if there are any leaks.
    j. Do not tighten clamps excessively.

32. Name FOUR methods of preventing a radiator from becoming blocked.

    a. Drain the water and force a strong jet of water through it.
    b. Ad a anti rust agent.
    c. Use distilled water.
    d. Treat the radiator with a lime dissolving agent.

33. How can YOU clean the outside of the radiator?

    a. Use compressed air to clean the radiator from the outside,
    b. Use a piece of wire to clean badly blocked tubes.
    c. Use a brush to brush off al undesired matter like seeds.

34. Name AIGHT ways of maintaining farm vehicles.

    a. Ensure that the radiator is filled.
    b. Check oil level.
    c. Check tire pressure.
    d. Use vehicle for specific purpose.
    e. Don’t overload any vehicle.
    f. Draw up a time table for servicing.
    g. Keep implements and machinery clean.
    h. Repair defects immediately.
    i. Check a vehicle each time a piece of work is done.
    j. Lubrication of tractors must be done regularly.

35. Tabulate the differences between spark ignition engines and compression ignition engines.

ITEM	DIESEL ENGINES	PETROL ENGINES
1. Type of fuel	Diesel	Petrol
2. Ignition system	Compression	Spark ignition
3. Mixing of air and fuel	In the cylinder	In the carburettor
4. Compression ratio	14:1 to 20:1	4:1 to 8:1
5. Cost of fuel	Cheaper	More expensive
6. Fuel consumption	Good	Not so good
7. Sparkplug present	No spark-plug	Spark plug-present
8. Carburettor	No carburettor	Carburettor present
9. Ignition system	No ignition system	Ignition system present
10.Transport cost of fuel	Cheap to transport	Expensive to transport

36. Explain what is meant with “compression ratio” of an engine.

Ratio between the volume of air above the piston when it is at its lowest position (BDC) to the volume of air above the piston when it is at its highest position (TDC)

37. Name the four strokes of the 4-stroke engine as illustrated below.

a. Intake cycle.
b. Compression cycle.
c. Combustion cycle.
d. Exhaust cycle.

1. The picture shows a engine found in a motor vehicle.

1. Label the parts A, B and C.

e. Air cleaner.
f. Self starter.
g. Oil filter.

2. What is the function of the part labelled as A?

Clean the air to engine.

3. Give the function of a dipstick.

To indicate oil level in the engine

2. When looking at the picture you see that there is a radiator connected with pipes to the engine. There is also a fan behind the radiator.

1. What is the alternative method that can be used for cooling an engine?

Air cooling

2. Name two materials that are used to manufacture a radiator.

Cu (Copper)

Al (Aluminium)

3. Which two types of belts can be used as driving belts in the engine?

Flat belts and V-belts

Basic 4-stroke principles

Summary

The five events of an internal combustion engine are Intake, Compression, Ignition, Power, and Exhaust. In a 4-stroke gasoline engine, the crankshaft does two revolutions in each engine cycle. Only one of its 4-strokes delivers energy to the crankshaft.

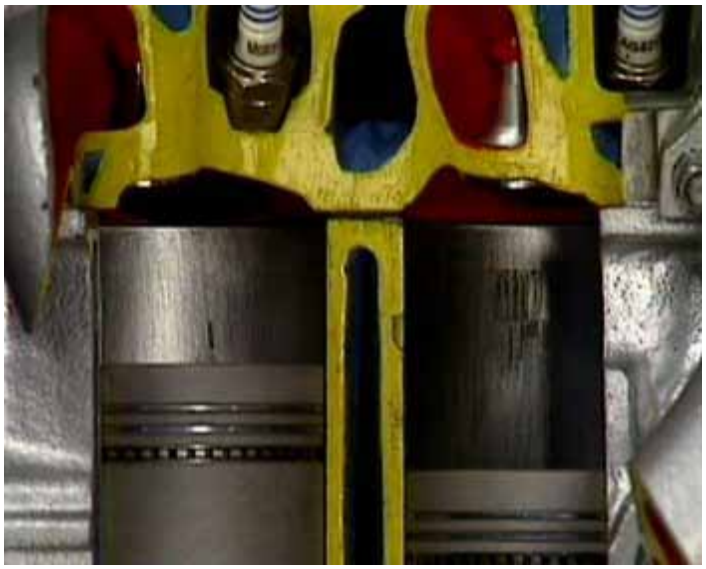

This is a cylinder for a 4-stroke Petrol/Gasoline engine. The first step is to get the air-fuel mixture into the chamber. Mixture enters through an inlet port that is opened and closed by an inlet valve. This is called Intake.

Next is compression. The piston compresses the air-fuel mixture into a smaller volume.

A spark across the electrodes of a spark plug ignites it, and it burns. This burning is called combustion.

The burning gases expand rapidly, and push the piston down the cylinder until it reaches bottom dead center.

The reciprocating action of the piston turns into the rotary motion of the crankshaft.

The crankshaft forces the piston back up the cylinder, pushing leftover gases out past an exhaust valve. And everything is back where it started, ready to repeat the whole process.

The whole process is a cycle. A new mixture enters and is ignited. Combustion occurs, expanding gases drive the piston down and turn the crankshaft which pushes the piston back up the cylinder.

These 5 events occur in all internal combustion engines. How they happen can change but they are always there.

In one 4-stroke cycle, the crankshaft does 2 revolutions. In those 2 revolutions how many strokes does the piston make? It does 4 strokes.

Out of those 4 strokes how many actually produce energy? In one 4-stroke cycle, only 1 stroke out of 4 delivers new energy to turn the ?

4-stroke engine cycle

Summary

A stroke is the movement of the piston from top dead center to bottom dead center.

A 'stroke' is the movement of the piston from 'top dead center' (TDC) to 'bottom dead center' (BDC), or the other way round, from BDC to TDC. A 4-stroke engine has four strokes. They are intake, compression, power, and exhaust.

A 4-stroke gasoline engine uses internal combustion, meaning that the heat that causes the air in the cylinder to expand is generated inside the cylinder. By comparison, a steam engine produces its heat in a furnace and boiler outside the engine cylinder so it is an external combustion engine.

The four strokes must include the five key events common to all internal combustion engines - Intake, Compression, Ignition, Power, & Exhaust.

Intake: Taking in air-fuel mixture

The intake stroke starts with the exhaust valve closed, the inlet valve opening, and the piston at its highest point, top dead center. As it moves down, it increases the volume above the top of the piston. This makes pressure inside the cylinder lower than the pressure outside. This higher outside air pressure forces the air-fuel mixture into the cylinder. The piston reaches bottom dead center, the inlet valve closes, and the intake stroke ends.

Compression: Squeezing the air-fuel mixture into a smaller volume

Both intake and exhaust valves stay closed as the piston leaves bottom dead center. The piston moves up, squeezing the air-fuel mixture into a smaller and smaller volume, which compresses it. That causes the air/fuel charges temperature to rise, and that makes ignition easier and combustion (burning of fuel) more complete.

Ignition and Power: Burning the air-fuel mixture and forcing the piston down

Just before the piston reaches top dead center, the next key event occurs - Ignition. The air-fuel mixture explodes and as it expands it pushes the piston down the cylinder. This is the Power stroke that drives the engine.

Exhaust: Getting rid of the burnt gases

The piston now moves from bottom dead center to top dead center The exhaust valve opens, and the piston pushes out the leftover gases. Remember, the intake valve is only open during the intake stroke, and the exhaust valve is only open during the exhaust stroke. Both are closed during the compression and power stokes.

Basic 2-stroke principles

Summary

In most 2-stroke gasoline engines the inlet and exhaust ports are opened and closed by the movement of the piston, not valves.

The 2-stroke petrol engine is different from the 4-stroke petrol engine. In a 2-stroke engine the inlet and exhaust ports are open and closed by the movement of the piston. But it is still an internal combustion engine and has the five events common to all such engines.

Intake occurs when the air-fuel mixture enters the crankcase. It is then transferred from the crankcase to above the piston.

Compression, forcing the mixture into a small volume.

Ignition when the spark from the spark plug ignites the mixture, and it burns.

Power, where energy released by combustion generates the force that turns the crankshaft.

And Exhaust, removing leftover gases.

As in all internal combustion engines, these five events must occur, but not always in the same way.

The whole process is a cycle. A new mixture enters and is ignited. Combustion occurs. Expanding gases drive the piston down and turn the crankshaft which pushes the piston back up the cylinder.

Basic 4-stroke diesel principles

This is one cylinder of a 4-stroke diesel engine. This model uses what is called direct injection. It is an internal combustion engine, with the five events common to all internal combustion engines. Let's see how they happen in diesel engines.

Unlike the gasoline engine, air alone enters the cylinder on the intake stroke.

Compression, forcing the air into a small volume. This compression heats the air. At the end of this stroke, diesel engine fuel is injected into the combustion chamber.

Ignition, burning the mixture. It is just the heat of the compressed air that ignites the fuel. That's why diesels are called compression ignition engines.

Power, where energy released from combustion generates the force to turn the crankshaft.

And Exhaust, removing leftover gases.

This brings the system back to where it began, ready for another cycle.

TEMPERATURE CONTROL

1. What happens to an engine when it overheats?
   a. Pistons expand and seize inside the cylinders.
   b. Expanded piston causes extra wear.
   c. Engine oil looses its lubrication properties.
   d. Oil is broken up and damaging substances are formed.
   e. Fuel mixture ignites before sparkplug can deliver a spark. (Pre-ignition)
   f. High pre-ignition shocks can damage the engine severely.
2. What happens to the engine when it is over cooled?
   a. Engine work less efficiently.
   b. Higher fuel consumption.
   c. Incomplete ignition because of the fuel mixture that does not fully evaporate.
   d. Fuel tends to run down the cylinder walls mixing with the engine oil in the crankcase and diluting it so that it loose its lubrication properties, resulting in damage to bearings and cylinders.
   e. Fuel running down the cylinder walls washes oil down causing excessive wear.

3. Name two reasons for over-cooling of a engine.

   a. Thermostat stuck in the open position.
   b. Radiator too large.

4. Name eleven things that can cause overheating of an engine.

   a. Abnormal heavy loads pulled for long distances.
   b. Loosely adjusted fan belt.
   c. Faulty water pump.
   d. Lime in radiator.
   e. Dust blocking the radiator.
   f. Too lean fuel mixture.
   g. Incorrect ignition timing.
   h. Improper heat range plugs.
   i. Collapsed water hoses.
   j. Incorrect radiator screens.
   k. Insufficient water in cooling system.

5. Describe air-cooling.

   a. A strong air current blows over the special protrusions on the cylinder walls extracting heat in the process.
   b. Protrusions enlarge the area that comes into contact with the air effecting quicker heat absorption.

6. Advantages of air-cooled engines over water-cooled engines:

   a. An air-cooled engine is more simple in construction and lighter than water-cooled engines as they are without water jackets, water pump, radiator and water pipe connections.
   b. An air-cooled engine does not freeze up during very cold winter nights.
   c. The air-cooled engine which does not have a water pump, radiator, etc. is more compact.
   d. It is not necessary to check the cooling system for water levels.

7. The disadvantages of air-cooled engines:

   a. It is difficult to achieve even cooling in all circumstances as can be done with water-cooled engines.
   b. They are recommended to run on heavier grade oil because they operate at higher temperatures.
   c. It is more difficult to apply air-cooling to big multi-cylinder engines.
   d. One must guard against the accumulation of dust, leaves, oil and other impurities between the fins
   e. A much bigger fan is needed compared to that of water-cooled engines.
   f. In the case of tractors, weight plays a rather important role.

8. Sketch of the air-cooled engine.

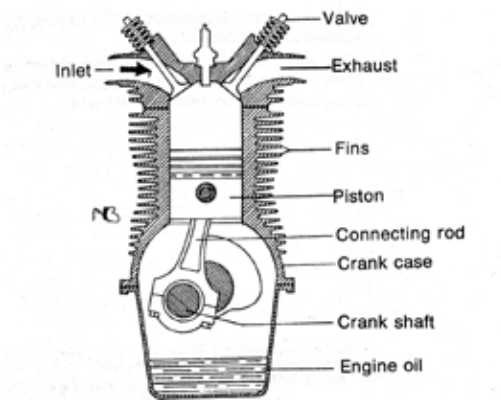

9. Advantages of water as a cooling medium:

   a. It is abundant, freely available and usually costs nothing.
   b. It absorbs heat very well.
   c. It circulates easily over a fairly wide temperature range.
   d. It is not dangerous, inflammable, harmful or uncomfortable to use.

   How does the fins help to cool the engine.

10. Disadvantages of water as a cooling medium:

   a. The freezing point of water is fairly high consequently anti freeze should be used during winter.
   b. Brackish water tends to precipitate on the inner walls of the water-jackets.
   c. Certain salts and acids, which are dissolved in water, may eat away the metal components of the radiator and engine.
   d. When water is heated, it evaporates so the system constantly needs topping up.

11. Describe the thermo-syphon cooling system:

   a. It is based on the principle to circulate water in the cooling system.
   b. The water surrounding the cylinders of the engine, heat up and then flows upward to the highest point in the engine block where it exits the engine to enter the radiator through the upper radiator hose into the header tank.
   c. When use is made of a stationary engine a water tank can be used instead of a radiator.

12. The rate at which the water circulates through the system depends on the following factors:

   a. The rate at which the water is heated in the engine.
   b. The rate at which the water is cooled in the radiator.
   c. The diameter and length of the water pipes.
   d. The size of the core tubes of the radiator.
   e. The difference in height between the top of the radiator and the top of the engine.

13. Sketch of the thermo-syphon cooling system.

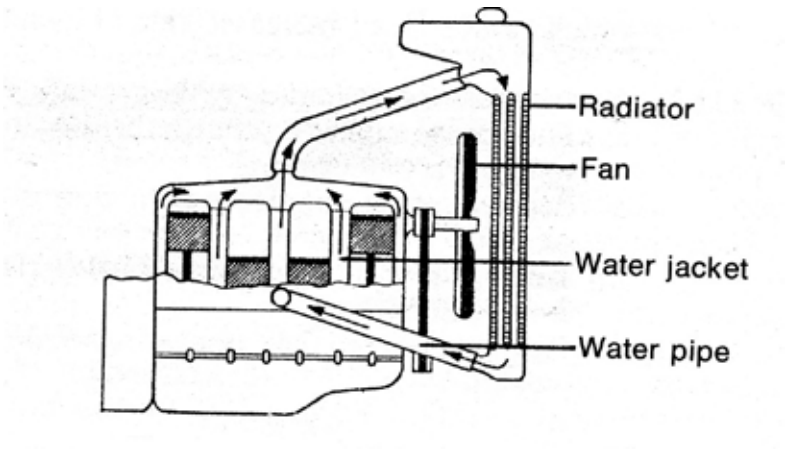

14. Advantages of the thermo-syphon cooling system:

   a. The construction is quite simple because of the absence of a water pump.
   b. Because of its simple construction it is a cheaper system.
   c. There are no moving mechanical parts that can become defective.
   d. The engine reaches operating temperature very quickly.

15. The disadvantages of the thermo-syphon cooling system:

   a. The rate of circulation is much slower than that of other cooling systems.
   b. When used for a multi-cylinder engine there is a risk that not all the parts of the engine will be cooled sufficiently.
   c. When the engine pulls a heavy load, the slow rate of circulation may cause insufficient cooling and the water in the system will start boiling.
   d. It is important that the water level should not drop below that of the upper radiator pipe. If that happens there will be no circulation and abnormally high temperatures will damage the engine.

16. Name the two types of thermostats.

Capsule thermostat (Filled with wax)

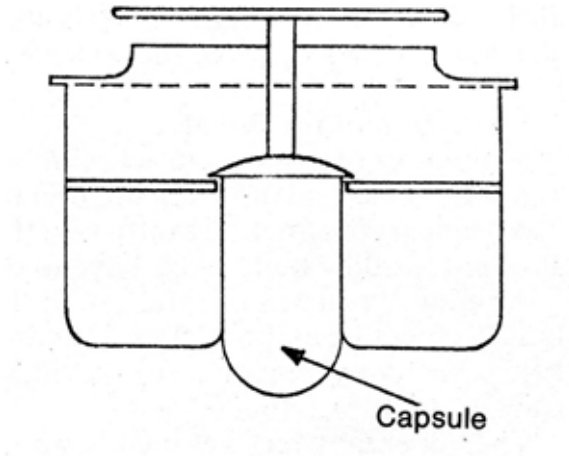

Concertina thermostat (Filled with alcohol)

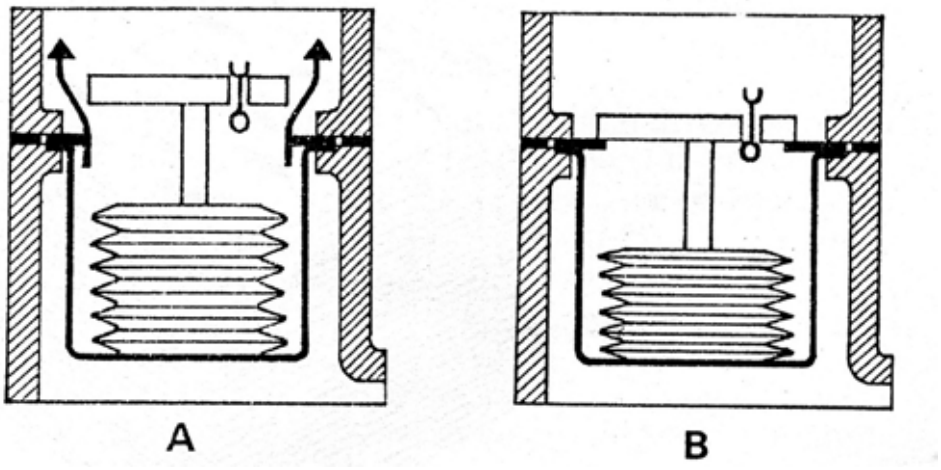

17. Describe the working of the capsule type thermostat.

   a. As soon as the wax becomes heated it expands and the valve is opened.
   b. When it cools down the valve is closed.

18. Describe the working of the concertina type thermostat.

   a. As soon as the water in the engine has been heated to a temperature close to its working temperature the alcohol in the thermostat starts to boil and is transformed into a gas.
   b. The gas forces the concertina to expand and it opens the valve.
   c. If the water inside the engine were to drop the alcohol in the container would condense and the valve would be closed, limiting water circulation.

19. What is the function of the thermostat?

Regulates the temperature inside the engine so that the temperature in the engine stays as close as possible to working temperature.

20. What is the function of the radiator?

Cools down the hot water coming from the engine.

21. Name the three parts of the radiator.

a. Upper tank.
b. Cooling core.
c. Lower tank.

22. What is the function of the radiator fan?

It sucks cold air through the radiator core, cooling the hot water inside the radiator.

What Are the Different Types of Agricultural Tools?

Many items that are commonly found in garages and backyards are actually agricultural tools. Although rakes, shovels, and other hand tools may not be essential to the average person, they can be very important in an agricultural setting. The fact that some of these items have been used for generations shows the longevity of a good idea.

A **spade** is a tool that is often used for agriculture. Laymen, however, commonly confuse the spade with the shovel. They are both old tools that are very similar, but they are not exactly the same. Spades tend to have flat edges and lack the curved head that shovels usually have. This makes the spade a good digging implement, but it is not very suitable for carrying materials.

Rakes and hand cultivators are two other agricultural tools that may be confused. A rake can be considered a handheld cultivation tool, and the two implements can be used for many of the same purposes. When a person in the agricultural industry speaks of a hand cultivator, however, he is most likely referring to a shorter tool that has three tines and requires a person to bend or stoop to the ground to use it.

A **plow** is a tool that is designed to turn over layers of soil. While most people can generally agree on the purpose, they may not all agree on how the tool works since there are different types. For large, commercial agriculturists, a plow is likely to be described as something that is attached and pulled behind a tractor. In rural areas and less developed countries, some farmers still use the more traditional method of hooking their plows to horses or donkeys and having the animals pull them.

Knives are generally recognized as culinary tools but are not commonly recognized as agricultural tools. They do, however, play an important role in some segments of the industry. Sugarcane is a crop that is still largely harvested by hand. A cane knife, which is often designed like a machete with a hook on the tip, is widely used for this task in many countries. Harvesting knives are also popular in the banana industry.

39. ANIMAL DRAWN IMPLEMENTS

Animal drawn implements can and will always be apart of a country's heritage and agricultural environment. Small-scale farmers to cultivate their fields can still effectively use these implements.

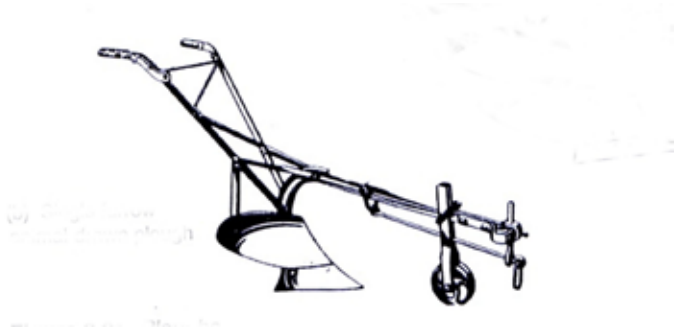

1. Study the sketch carefully and write TWO reasons for identifying this implement as an animal drawn implement.

   a. Two handles to steer the plough.
   b. Method of coupling/hitching the implement.

2. Evaluate the use of animal drawn implements versus mechanized implements by referring to the advantages.

   - It is better for the following reasons
   - No fuel costs.
   - Low maintenance.
   - Inexpensive.
   - Can work between narrow rows.

40 Name the points to consider when the planter is adjusted for the planting operation.

   a. Set to plant the desired row width.
   b. Set to plant the correct spacing in the row.
   c. Set to feed the correct amount of fertilizer.
   d. Set to plant the correct depth according to soil type and moisture.

IMPLEMENTS

1. Various implements are used before and after the planting of the maize crop.

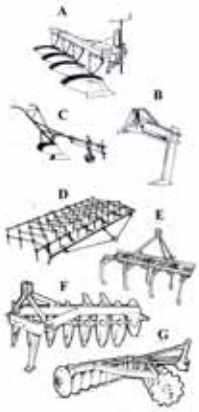

1 Name the implements labelled from A and F.

a. Mould board plough.
b. Ripper.
c. Single furrow animal drawn plough.
d. Harrow.
e. Cultivator.
f. One way disc plough.
g. Two way disc plough.

2 Identify ONE implement that can be used for primary soil cultivation.

(Write only the symbol.)
A, B or C

3 Describe ONE use of the implement labelled as B.

Its function is to break the plough bank or plough sole for better root penetration.

4 Large teethed implements “Field span” are designed for a specific purpose.

Write ONE advantage that distinguishes the larger implements from the smaller sized implements.
Fuel / time saving
Can be used on large lands

CHAPTER 6

IRRIGATION AND WATER SUPPLY

IRRIGATION SYSTEMS

Some irrigation methods

Irrigation is the controlled application of water for agricultural purposes through manmade systems to supply water requirements not satisfied by rainfall. Crop irrigation is vital throughout the world in order to provide the world’s ever-growing populations with enough food. Many different irrigation methods are used worldwide, including:

- Center-Pivot: Automated sprinkler irrigation achieved by automatically rotating the sprinkler pipe or boom, supplying water to the sprinkler heads or nozzles, as a radius from the center of the field to be irrigated. Water is delivered to the center or pivot point of the system. The pipe is supported above the crop by towers at fixed spacings and propelled by pneumatic, mechanical, hydraulic, or electric power on wheels or skids in fixed circular paths at uniform angular speeds. Water is applied at a uniform rate by progressive increase of nozzle size from the pivot to the end of the line. The depth of water applied is determined by the rate of travel of the system. Single units are ordinarily about 1,250 to 1,300 feet long and irrigate about a 130-acre circular area.

- Drip: A planned irrigation system in which water is applied directly to the Root Zone of plants by means of applicators (orifices, emitters, porous tubing, perforated pipe, etc.) operated under low pressure with the applicators being placed either on or below the surface of the ground.

- Flood: The application of irrigation water where the entire surface of the soil is covered by ponded water.

- Sprinkler: A planned irrigation system in which water is applied by means of perforated pipes or nozzles operated under pressure so as to form a spray pattern.
- Subirrigation: Applying irrigation water below the ground surface either by raising the water table within or near the root zone or by using a buried perforated or porous pipe system that discharges directly into the root zone.
- Traveling Gun: Sprinkler irrigation system consisting of a single large nozzle that rotates and is self-propelled. The name refers to the fact that the base is on wheels and can be moved by the irrigator or affixed to a guide wire.

Drip Irrigation

In the next section, we'll take a look at a more controlled irrigation method called drip irrigation.

While surface irrigation methods rely on watering the whole surface of the field and overhead irrigation leaves the plants wet and produces runoff, drip irrigation is far more controlled. Water is slowly provided to a very specific area, close to the roots of the plant, by a network of drip emitters.

Drip Irrigation

Despite their name, these tiny nozzles - about the size of a quarter - don't hang above the plants and drip but are actually laid along the ground. Linked to an appropriate water source by a main feeder hose, they provide a slow and steady flow of water. An alternative to drip irrigation is trickle tape - essentially a length of hose with built in drip emitters.

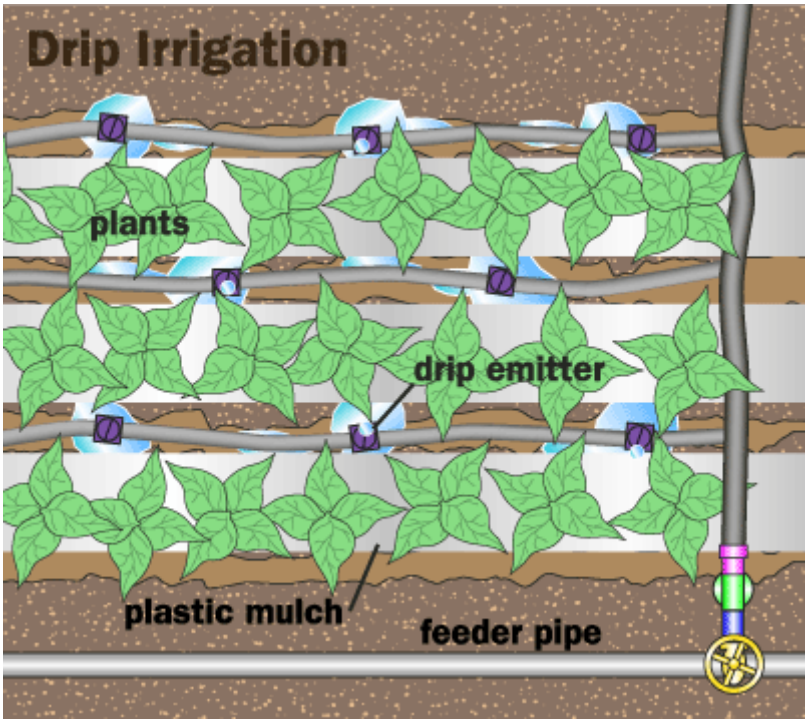

Drip irrigation provides water near the base of the plant, leaving the upper foliage dry and less susceptible to fungi.

The advantage to using trickle or drip irrigation is, simply, control. This method of irrigation is precise and economical. A standard sprinkler, for example, might measure the water flow in liters per minute -- somewhere between one and five is normal. A drip emitter, on the other hand, is rated in liters per hour. The flow of water is so slow that it is easily absorbed into the ground. In a well-tuned system there is little opportunity for excess water running off and being wasted.

And this approach can be even more fine-tuned by going underground.

Sub-Surface Irrigation

Though initially expensive -- between R5000 and R10000 per hectare -- and not suitable for many areas, the economical advantages of drip irrigation can be further enhanced by placing the irrigation tubing about 12.7 centimeters below the surface. Down there, the water really does get straight to where it's needed - the roots of the plant. Evaporation is greatly reduced, and there is no opportunity for surface runoff.

Soil cut away to expose a drip irrigation line in a tomato field.

A similar effect can be gained far more cheaply by making use of plastic mulch. Traditionally, mulch is a protective covering of organic material placed around plants to:

- reduce evaporation
- prevent the growth of weeds
- help protect the roots from frost damage

It can also help keep fruit off the ground - anyone who's grown strawberries will appreciate the value of mulching with a layer of clean straw.

More recently, plastic mulch has become an integral part of many drip irrigation systems. By laying sheets of plastic across the fields, the horticulturalist can further improve conditions for their plants. However, there are concerns that extensive use of plastic mulch may have long-term detrimental effects on the environment, perhaps increasing the amount of rain and pesticides that runs off into nearby water.

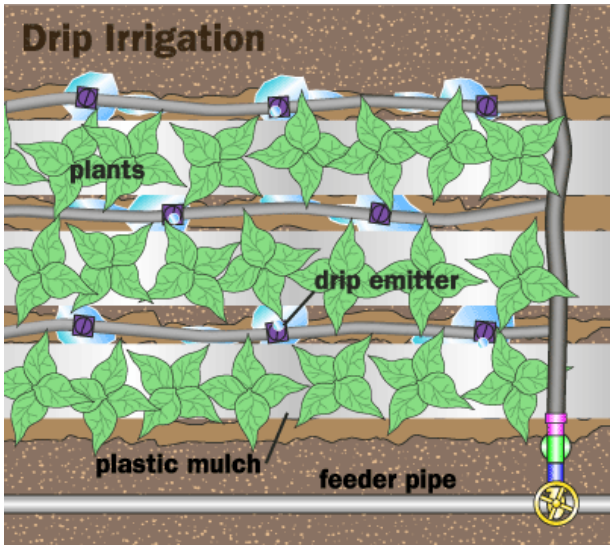

Plastic mulch has become an integral part of many drip irrigation systems.

It would seem that, with the right amount of money and time, you can set up a system that delivers exactly the right amount of water to your plants at exactly the right moment, and you can sit back and watch them grow. It almost sounds too easy, doesn't it? What's the catch?

In developed countries we have a ready supply of fresh, clean water. It merely needs filtering before it can be used for irrigation; the finely-tuned systems used in drip irrigation are easily clogged by dirt or deposits from unfiltered water. Developing countries, however, may have to rely on rivers or seasonal rainfall for their supplies of water. While this may not always be reliable, the alternative is to create dams or canals, each of which may cause unwanted changes to the local environment.

Even though no one wants to wash away the fertile soil from their field, soil erosion does occur. This is an unwanted and unfortunate side-effect of surface irrigation. In addition to this, the constant evaporation of water may also lead to a build up of salt in the upper layers of soil, particularly if the soil has a high saline content to begin with, rendering it unsuitable for farming.

Severe soil erosion in a wheat field

So, we've seen that while methods of irrigation vary in complexity and efficiency, they are all just ways in which farmers or gardeners attempt to simplify the task of watering their crops. Each method has its own advantages and disadvantages, which is why there is still such a wide range of methods in use.

Irrigation: Drip/Microirrigation

Drip (trickle) irrigation waters crops efficiently.
Credit: Nova Scotia Agriculture and Fisheries

The bushes in this picture are being irrigated using the "drip irrigation" method, which is the most common type of "microirrigation." If you look closely you'll see the small horizontal pipes that are slowly dripping water running just above the ground. Drip irrigation is one of the more advanced techniques being used today because, for certain crops, it is much more efficient than traditional spray irrigation, where a larger portion of the water is lost to evaporation.

In drip irrigation, water is run through pipes (with holes in them) either buried or lying slightly above the ground next to the crops. Water slowly drips onto the crop roots and stems. Unlike spray irrigation, very little is lost to evaporation and the water can be directed only to the plants that need it, cutting back on water waste.

Advantages of micro irrigation

Microirrigation has gained attention during recent years because of its potential to increase yields and decrease water, fertilizer, and labor requirements if managed properly. Microirrigation systems can apply water and fertilizer directly to individual plants or trees, reducing the wetted area by wetting only a fraction of the soil surface; thus, water is applied directly to the root zone.

- Microirrigation is a low pressure, low volume irrigation system suitable for high-return value Crops such as fruit and vegetable Crops.
- If managed properly, microirrigation can increase yields and decrease water, fertilizer and labor requirements.
- Microirrigation applies the water only to the plant's root zone and saves water because of the high application efficiency and high water distribution uniformity.
- Microirrigation can irrigate sloping or irregularly-shaped land areas that cannot be flood irrigated.
- Any water-soluble fertilizer may be injected through a microirrigation system.

Components (listed in order from water source)

- Pump or pressurized water source
- Water Filter(s) - Filtration Systems: Sand Separator like Hydro-Cyclone, Screen Filters[1], Media Filters
- Fertigation Systems (Venturi injector) and Chemigation Equipment (optional)
- Backwash Controller (Backflow Preventer)
- Main Line (larger diameter Pipe and Pipe Fittings)
- Hand-operated, electronic, or hydraulic Control Valves and Safety Valves
- Smaller diameter polytube (often referred to as "laterals")
- Poly fittings and Accessories (to make connections)
- Emitting Devices at plants (ex. Emitter or Drippers, micro spray heads, inline drippers, trickle rings)
- Note that in Drip irrigation systems Pump and valves may be manually or automatically operated by a controller.

Most large drip irrigation systems employ some type of filter to prevent clogging of the small emitter flow path by small waterborne particles. New technologies are now being offered that minimize clogging. Some residential systems are installed without additional filters since potable water is already filtered at the water treatment plant. Virtually all drip irrigation equipment manufacturers recommend that filters be employed and generally will not honor warranties unless this is done. Last line filters just before the final delivery pipe are strongly recommended in addition to any other filtration system due to fine particle settlement and accidental insertion of particles in the intermediate lines.

Drip and subsurface drip irrigation is used almost exclusively when using recycled municipal waste water. Regulations typically do not permit spraying water through the air that has not been fully treated to potable water standards.

Because of the way the water is applied in a drip system, traditional surface applications of timed-release fertilizer are sometimes ineffective, so drip systems often mix liquid fertilizer with the irrigation water. This is called fertigation; fertigation and chemigation (application of pesticides and other chemicals to periodically clean out the system, such as chlorine or sulfuric acid) use chemical injectors such as diaphragm pumps, piston pumps, or venturi pumps. The chemicals may be added constantly whenever the system is irrigating or at intervals. Fertilizer savings of up to 95% are being reported from recent university field tests using drip fertigation and slow water delivery as compared to timed-release and irrigation by micro spray heads.

If properly designed, installed, and managed, drip irrigation may help achieve water conservation by reducing evaporation and deep drainage when compared to other types of irrigation such as flood or overhead sprinklers since water can be more precisely applied to the plant roots. In addition, drip can eliminate many diseases that are spread through water contact with the foliage. Finally, in regions where water supplies are severely limited, there may be no actual water savings, but rather simply an increase in production while using the same amount of water as before. In very arid regions or on sandy soils, the preferred method is to apply the irrigation water as slowly as possible.

Pulsed irrigation is sometimes used to decrease the amount of water delivered to the plant at any one time, thus reducing runoff or deep percolation. Pulsed systems are typically expensive and require extensive maintenance. Therefore, the latest efforts by emitter manufacturers are focused toward developing new technologies that deliver irrigation water at ultra-low flow rates, i.e. less than 1.0 liter per hour. Slow and even delivery further improves water use efficiency without incurring the expense and complexity of pulsed delivery equipment.

Drip irrigation is used by farms, commercial greenhouses, and residential gardeners. Drip irrigation is adopted extensively in areas of acute water scarcity and especially for crops such as coconuts, containerized landscape trees, grapes, bananas, ber, brinjal, citrus, strawberries, sugarcane, cotton, maize, and tomatoes.

Advantage / disadvantages

Banana plants with drip irrigation

The advantages of drip irrigation are:

- Minimized fertilizer/nutrient loss due to localized application and reduced leaching.
- High water application efficiency.
- Leveling of the field not necessary.
- Ability to irrigate irregular shaped fields.
- Allows safe use of recycled water.
- Moisture within the root zone can be maintained at field capacity.
- Soil type plays less important role in frequency of irrigation.
- Minimized soil erosion.
- Highly uniform distribution of water i.e., controlled by output of each nozzle.
- Lower labour cost.
- Variation in supply can be regulated by regulating the valves and drippers.
- Fertigation can easily be included with minimal waste of fertilizers.
- Foliage remains dry thus reducing the risk of disease.
- Usually operated at lower pressure than other types of pressurised irrigation, reducing energy costs.
-

The disadvantages of drip irrigation are:

- Expense. Initial cost can be more than overhead systems.
- Waste. The sun can affect the tubes used for drip irrigation, shortening their usable life. Longevity is variable.
- Clogging. If the water is not properly filtered and the equipment not properly maintained, it can result in clogging.
- Drip irrigation might be unsatisfactory if herbicides or top dressed fertilizers need sprinkler irrigation for activation.
- Drip tape causes extra cleanup costs after harvest. You'll need to plan for drip tape winding, disposal, recycling or reuse.
- Waste of water, time & harvest, if not installed properly. These systems requires careful study of all the relevant factors like land topography, soil, water, crop and agro-climatic conditions, and suitability of drip irrigation system and its components.
- Germination Problems. In lighter soils subsurface drip may be unable to wet the soil surface for germination. Requires careful consideration of the installation depth.
- Salinity. Most drip systems are designed for high efficiency, meaning little or no leaching fraction. Without sufficient leaching, salts applied with the irrigation water may build up in the root zone, usually at the edge of the wetting pattern.

Dripperline

A dripperline is a type of drip irrigation tubing with emitters pre-installed at the factory.

Emitter

An emitter is also called a dripper and is used to transfer water from a pipe or tube to the area that is to be irrigated.

Why consider drip irrigation?

Drip irrigation can help you use water efficiently. A well-designed drip irrigation system loses practically no water to runoff, deep percolation, or evaporation. Drip irrigation reduces water contact with crop leaves, stems, and fruit. Thus conditions may be less favorable for the onset of diseases. Irrigation scheduling can be managed precisely to meet crop demands, holding the promise of increased yield and quality.

Growers and irrigation professionals often refer to "subsurface drip irrigation," or SDI. When a drip tape or tube is buried below the soil surface, it is less vulnerable to damage during cultivation or weeding. With SDI, water use efficiency is maximized because there is even less evaporation or runoff.

Agricultural chemicals can be applied more efficiently with drip irrigation. Since only the crop root zone is irrigated, nitrogen already in the soil is less subject to leaching losses, and applied fertilizer N can be used more efficiently. In the case of insecticides, less product might be needed. Make sure the insecticide is labeled for application through drip irrigation.

Additional advantages of drip irrigation include:

- Drip systems are adaptable to oddly shaped fields or those with uneven topography or soil texture; these specific factors must be considered in designing the drip system. Drip systems also can work well where other irrigation systems are inefficient because parts of the field have excessive infiltration, water puddling, or runoff.

- Drip irrigation can be helpful if water is scarce or expensive. Because evaporation, runoff, and deep percolation are reduced and irrigation uniformity is improved, it is not necessary to “over-water” parts of a field to adequately irrigate the more difficult parts.
- Precise application of nutrients is possible using drip irrigation. Fertilizer costs and nitrate losses can be reduced. Nutrient applications can be better timed to meet plants’ needs.
- Drip irrigation systems can be designed and managed so that the wheel traffic rows are dry enough to allow tractor operations at any time. Timely application of herbicides, insecticides, and fungicides is possible.
- Proven yield and quality responses to drip irrigation have been observed in onion, broccoli, cauliflower, lettuce, melon, tomato, and cotton.
- A drip irrigation system can be automated.

There are some disadvantages to drip irrigation. For example:

- Drip irrigation systems typically cost R5000 to R12000 or more per Hectare. Part of the cost is a capital investment useful for several years, and part is annual. Systems can be more elaborate and costly than they need to be. Growers new to drip irrigation might want to start with a relatively simple system on a small acreage.
- Drip tape or tubing must be managed to avoid leaking or plugging. Drip emitters are easily plugged by silt or other particles not filtered out of the irrigation water. Emitter plugging also can be caused by algae growing in the tape or by chemical deposits at the emitter.
- You might need to redesign your weed control program. Drip irrigation might be unsatisfactory if herbicides need sprinkler irrigation for activation. However, drip irrigation can enhance weed control in arid climates by keeping much of the soil surface dry. Tape depth must be chosen carefully for compatibility with operations such as cultivation and weeding.
- Drip tape causes extra cleanup costs after harvest. You’ll need to plan for drip tape disposal, recycling or reuse.
- Despite all of drip irrigation’s potential benefits, converting to drip irrigation can increase production costs, especially where an irrigation system already is in place. Ultimately, there must be an economic advantage to drip irrigation to make it worthwhile.

Components and design of a drip irrigation system

The wetting pattern of water in the soil from the drip irrigation tape must reach plant roots. Emitter spacing depends on the crop root system and soil properties. Seedling plants such as onions have relatively small root systems, especially early in the season.

Design must take into account the effect of the land’s contour on pressure and flow requirements. Plan for water distribution uniformity by carefully considering the tape, irrigation lengths, topography, and the need for periodic flushing of the tape. Design vacuum relief valves into the system.

When designing a drip system, first identify fairly similar Irrigation zones. Irrigation zones are based on factors such as topography, field length, soil texture, optimal tape run length, and filter capacity. Many irrigation system suppliers use computer programs to easily analyze these factors and design drip systems. Once the zones are assigned and the drip system is designed, it is possible to schedule irrigations to meet the unique needs of the crop in each zone.

Consider power and water source limitations. Have your water analyzed by a laboratory that is qualified to evaluate emitter plugging hazards. Water quality might create limitations and increase system costs. Filters must be able to handle worst-case scenarios.

Finally, be sure to include both injectors for chemigation and flow meters to confirm system performance.

8 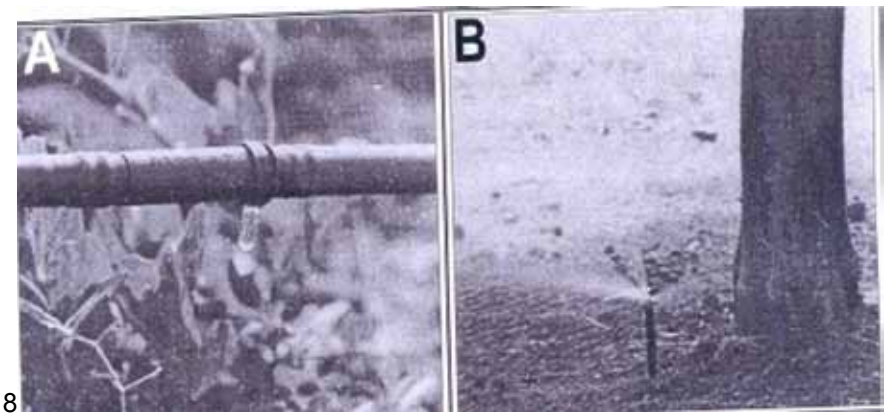

1 What is the system in A called?

Drip irrigation.

2 Give an example where system B can be used effectively.

Horticulture, greenhouses, orchards etc.

3 Explain in short the difference between micro- and macro-irrigation in relation to water distribution

- Micro irrigation concentrates the moisture at root area.
- Macro irrigation keep the whole field/ surface wet

9 The photo below shows a worker handling an aluminium pipe. Use the information shown in the photo and describe safety measures, regarding electricity, when working in irrigation fields.

* Water and metal conduct electricity:
* Do not work in wetlands with electricity.
* Be careful not touching transmission lines with metal pipes, as you are the shortest route to earth and be electrocuted.

10 The picture below shows a device that is used for specific irrigation purposes. Study the picture carefully and answer the questions that follow:

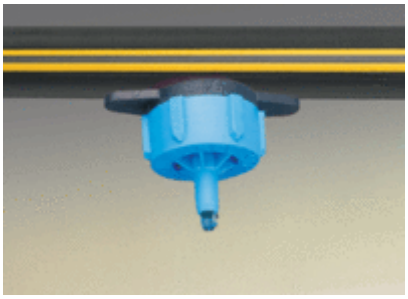

.1 Identify the device as shown in the above picture.

Dripper.

.2 Supply a reason why a sand filter is used in this irrigation system.

To clear the water of any impurities/solids.

.3 Give a reason why it is necessary to have an air valve incorporated into the main water line of this irrigation system.

To let the air out of the main line in order for the farmer to have a constant flow of water

4 Name the material used to manufacture the pipe as shown in the picture above.

PVC

WIND MILL

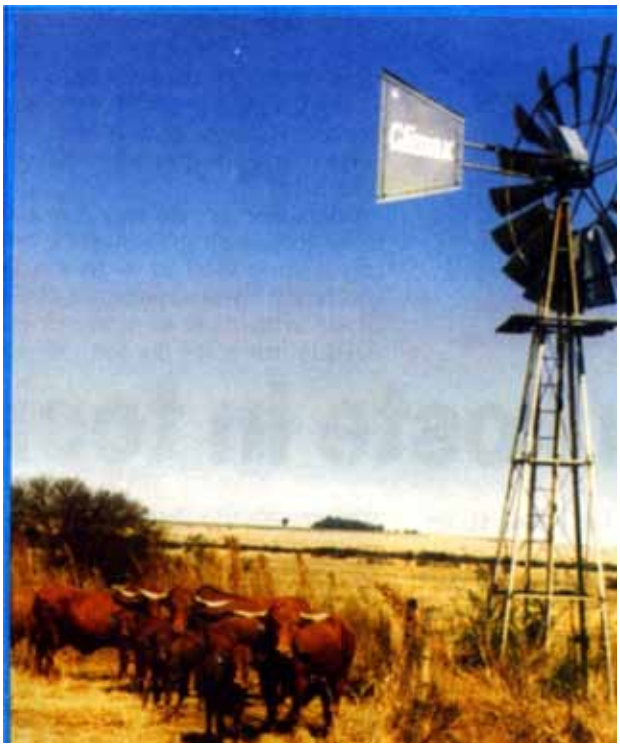

What Is a Wind Pump?
A wind pump is a wind mill that pumps water from a variety of water sources, including boreholes. The pumped water is usually used to provide clean drinking water, irrigate farmland, or hydrate and feed livestock. Wind pumps are also used to alleviate flooded areas from excess water and for producing salt from sea water. Often used in rural, arid and semi-arid areas, wind pumps can be seen in parts of Argentina, South Africa, Asia, and the United States. The origin of the wind pump dates back to the late nineteenth century. They were an important part of the economic development of many remote areas in the United States. Advances in the technology continue to be made. The main types of windmill pump are piston, centrifugal, and mono pumps. In general, however, windmill pumps can be classified into two types: the horizontal axis wind pump, which is more commonly used, and the vertical axis wind pump. As the names suggest, the rotor shaft in the horizontal axis wind pump runs parallel to the ground, whereas in vertical axis pump, it runs perpendicular to the ground. The types of rotors used in horizontal axis wind pumps are usually multi-bladed or three-bladed aerofoil. The common rotor types of vertical axis windmill pumps are Panemone and Darrieus. The rotor shaft of the horizontal axis wind pump must point towards the direction of wind, and the generator must be installed at the top of the tower. On the other hand, a vertical axis wind pump does not require its vertical rotor shaft to be positioned into the wind and the rotor can be installed near the ground. Although the cost of maintenance of horizontal axis wind pumps is high, their efficiency is typically greater than that of vertical axis wind pumps. Wind pumps have a tail vane that automatically turns the machine away from the direction of flow of wind, thereby avoiding damage due to high wind speeds. In general, piston pumps are used for pumping water from a borehole. The pump and rotor should work together to efficiently operate the wind pump. The flow of wind facilitates the rotation of the rotor blades and the power is transferred to the pump rods, which are usually made of galvanized steel. This causes the piston pump to pump water to a storage tank, which can later be distributed.

What is a Water Tower?
A water tower is a structure designed to hold a reservoir of water and also to help maintain the water pressure in a municipal water system. Water towers have been used for centuries to hold supplies of water, and are capable of providing water even in the event of a power outage or pump failure, because they are elevated, meaning that the water in the water tower will pressurize the pipes with the assistance of gravity. Many areas use water towers as backup water supply systems to ensure that citizens have access to running water, and most small towns can store up to a day's worth of water in their water towers. For every foot above the ground, a water tower is capable of generating more pressure. Typically, a water tower is installed on raised ground, and the tank of the tower is elevated to increase the potential pressure. In a small town, a single water tower can pressurize enough water to supply water to the entire town. In large cities, tall private buildings sometimes use water towers to supply their tenants, since the city's water system is not pressurized enough to get water to the top floors in peak periods of demand. When used in combination with a municipal water system, the pressurizing ability of a water tower serves two primary functions. The first function is to maintain constant pressure in the system, and prevent the emergence of negative pressure situations. Negative pressure can suck groundwater or other sources of pollution into the water supply, contaminating the town's water. A town with a water tower, however, can rest assured that the water lines will be fully pressurized at all times, keeping the water safe to drink. In some areas, a water tower must be attached to the municipal water system for this reason. The second function of a water tower is more economic. A water tower can deliver water at periods of peak demand relatively easily, while a pump may have difficulties. By using a pump and a water tower, a town can save costs on the pump by pumping for average demand. When demands for water outstrip the abilities of the pump, the water tower kicks in to supply more water. When the pump is providing more water than the town needs, as often happens at night, the excess fills the water tower so that it is ready for the next period of peak demand.

1. You must erect a pump on your farm to pump water from a borehole. The borehole is 100m deep and there is no electricity available. Answer the questions by using the information given in the paragraph.

   1 Give the name of the pump that you will use in the scenario given above.
   Supply a reason for your answer.
   Wind mil/Sun electricity pump.
   No electricity available.

   2 To prevent the water from flowing back into the pipes, when the pump is not working, the pump will need some type of device. What is this device called and where can you install it.
   Non-return valve.
   You can install it at the bottom of the suction pipe beneath the water level or at the top of the suction pipe above ground lev*el.*

   3 If a farmer does not have the knowledge to solve the problem as stated in scenario 6.4, he can utilise some sources of information that can help him solve this problem. Name TWO sources of information that the farmer can consult to help him solve the problem himself?
   Printed media.
   Internet.

4 Communication plays a prominent role in the every day operation of the farm. The farmer cannot make an informed decision without communication between him and his workers. The farmer also needs to communicate with the outside world to stay in touch with modern trends and daily market fluctuations. Name any TWO methods the farmer can use to communicate with his workers if he is not with them.

* Two way radios.
* Cell phones.
* Telephones.
* Internet.

5 Name TWO types of material that can be used as a casing for a borehole.

Plastic

Metal

Cement

POWER HEAD

2 The sketch below shows a device that is driven by an engine.

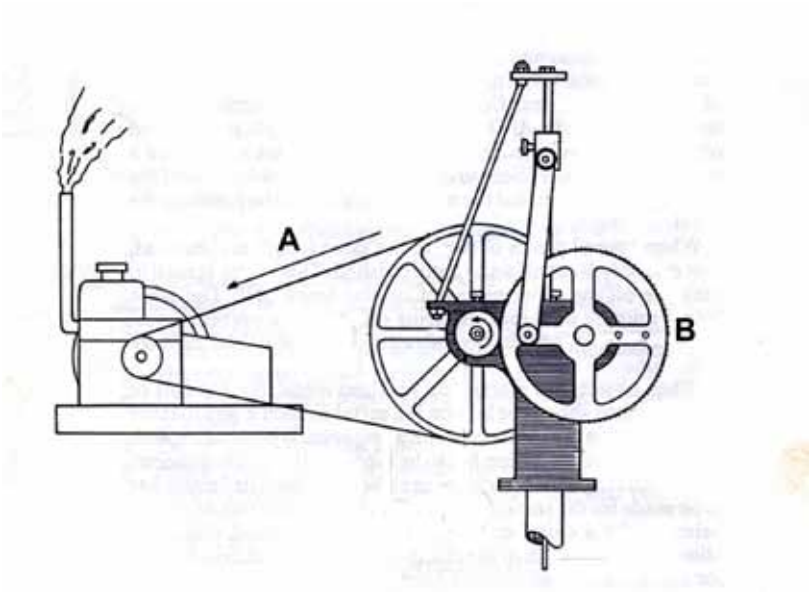

1 What is this device called and what is its function?

Power head.

Function is to pump water.

2 Name the type of drive that is used between the device and the engine.

Belt drive or Flat-belt drive.

3 The arrow A indicates the turning direction of the drive belt.

Will the turning direction of the gear indicated by the letter B be clockwise or anticlockwise?

Clock wise.

WATER SUPPLY FOR ANIMALS

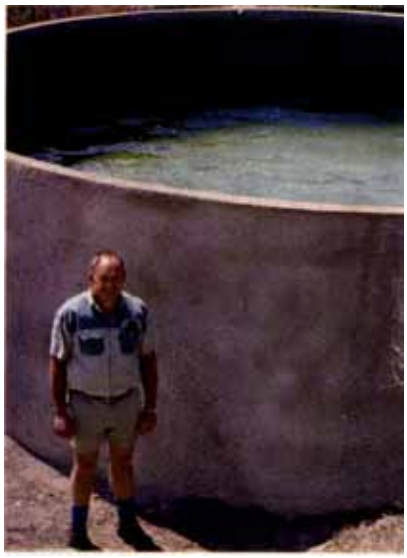

3. Name the points that should be kept in mind when installing drinking water for animals.

   a. Pressure high enough to satisfy needs.
   b. Prevent spillage.
   c. Joints watertight.
   d. Removal of spillage water.
   e. Protect all valves.

4. Name four requirements for troughs.

   a. Not be too high.
   b. : deep
   c. : wide
   d. Build in such a way that animals cannot get their feet into it.

5. What device is used to give water to pigs?

   - Nipple.

6. Make a neat sketch of the automatic water supplier for chickens.

VALLEY