Physics For Everyone

This book is dedicated to:
My wife,
Roswitha

and “Daddy”-cated to my children,
Lee Anne,
Brooke,
Jasmin,
and Daniel.

Emery M. Craighead
Bachelor of Arts, Mathematics
Bachelor of Science, Physics

Hemmingen, Germany
November, 2010

PREFACE (PLEASE READ)

Distribution and Usage
The intention of the author is to provide in a book, free of cost, his explanations and solutions to a collection of physics problems. It is expressly stated that **this book is not to be sold**; it may be freely distributed and replicated for educational purposes. It is made available in PDF format.

Structure
This book consists of a General Overview, a detailed Table of Contents, and solved physics problems. *Section 1, "The Universal Power of One", is fundamental to problem solving and should be read and understood before reading the remainder of the book.* Useful explanatory information can be at the beginning of some sections or contained in individual problem solutions.

Safety
The concepts presented can be used to build devices of many kinds. I hope this will help young people to invent and produce things that will benefit humanity in the future.

If you do not possess the technical expertise, personal capability, or skills required to use the information in this book safely, always seek professional help from qualified persons, i.e., teachers, engineers, or other qualified persons before attempting to build something using the information presented. When in doubt, ask qualified persons!

This should help the reader to complete any work desired without causing harm to him or herself or others, or causing damages or losses of any kind. Develop a safety-conscious attitude and maintain it when working with the information presented in this book.

Liability Statement
This book has been prepared with care to ensure the information provided is correct. However, nothing is perfect.

The author is not responsible for injuries, losses, or damages of any kind caused by the use or misuse of, or any errors in, or additions to or omissions from, the contents of this book. *The reader uses the information provided in this book at his or her own risk.*

General Overview by Sections

1. The Universal Power of One 37
2. Measurements 43
3. Density and Specific Gravity 45
4. The Principle of Archimedes 51
5. Barometric Phenomena 59
6. The Compressibility of Liquids 64
7. The Compressibility of Air 65
8. Pneumatic Devices 72
9. Molecular Motions 82
10. The Composition and Resolution of Forces 84
11. Gravitation 93
12. Falling Bodies 99
13. Newton’s Laws of Motion 107
14. Molecular Forces in Solids 116
15. Molecular Forces in Liquids 118
16. Measurement of Work 121
17. Work and the Pulley 123
18. Work and the Lever 126
19. The principle of work 135
20. Power and Energy 142
21. Thermometry 148
22. Coefficients of Expansion 151
23. Applications of Expansion 153
24. Friction 158
25. Efficiency 160
26. The Mechanical Equivalent of Heat 162
27. Specific Heat 165
28. Fusion 169
29. Evaporation 172
30. Hygrometry – Moisture Conditions in the Atmosphere 174
31. Boiling 179
32. Artificial Cooling 183
33. Industrial Applications 186

34. Conduction of Heat 190
35. Ventilation, Convection, Radiation, and Heating 192
36. Magnetism 194
37.Static Electricity 198
38. Distribution of Charge, Potential, and Capacity 204
39. Electricity in Motion 210
40. Electrolysis 211
41. Magnetic Effects of Current, Properties of Coils 213
42. Measurement of Electrical Currents 216
43. Resistance and Electromotive Force 222
44. Primary Cells 224
45. Secondary Cells 234
46. Heating Effects 239
47. Induced Currents 245
48. Dynamos and Motors 251
49. Induction Coil and Transformer 259
50. Speed and Nature of Sound 262
51. Sound, Reflection, Reinforcement, Interference 265
52. Properties of Musical Sounds 269
53. Wind Instruments 272
54. The Propagation of Light 275
55. The Nature of Light 283
56. Image Formation 287
57. Optical Instruments 294
58. Color Phenomena 299
59. Spectra 301
60. Invisible Radiations 304
61. Electrical Radiations 306

TABLE OF CONTENTS

1. THE UNIVERSAL POWER OF 1 .....- 37 -

2. MEASUREMENTS .....- 43 -

2.1 THE 200-METER RUN AT THE OLYMPIC GAMES CORRESPONDS TO THE 220-YARD RUN IN AMERICA. WHICH IS LONGER, AND HOW MUCH? .....- 43 -

2.2 A FRENCH CANNON HAS A DIAMETER OF 75 MILLIMETERS. WHAT IS THIS DIAMETER IN INCHES? ...- 43 -

2.3 A TRAIN TRAVELED FORM NEW YORK TO CHICAGO (967 MILES) IN 20 HOURS. FIND ITS AVERAGE SPEED IN MILES PER HOUR. .....- 43 -

2.4 TRY TO NAME AS MANY ADVANTAGES OF THE METRIC SYSTEM OVER THE ENGLISH SYSTEM AS YOU CAN. .....- 43 -

2.5 WHAT MUST YOU DO TO FIND THE CAPACITY IN LITERS OF A BOX WHEN ITS LENGTH, BREADTH AND DEPTH ARE GIVEN IN METERS? .....- 43 -

2.6 FIND THE NUMBER OF MILLIMETERS IN 6 KILOMETERS.....- 44 -

2.7 THE FIRST NON-STOP TRANSATLANTIC FLIGHT FROM NEWFOUNDLAND TO IRELAND, 1890 MILES, LASTED 15 HOURS AND 57 MINUTES. HOW MANY MILES PER HOUR DID THE PLANE FLY? .....- 44 -

2.8 FIND THE CAPACITY OF A BOX IN LITERS THAT IS 0.5 METERS LONG, 20 CM WIDE, AND 100 MM DEEP.... - 44 -

3. DENSITY AND SPECIFIC GRAVITY.....- 45 -

3.1 A LITER OF MILK WEIGHS 1032 GRAMS. WHAT IS ITS DENSITY? .....- 45 -

3.2 A BALL OF YARN WAS SQUEEZED INTO ¼ OF ITS ORIGINAL SIZE. WHAT EFFECT DID THIS PRODUCE UPON ITS MASS, ITS VOLUME, AND ITS DENSITY? .....- 45 -

3.3 IF A WOODEN BEAM IS 30CM X 20CM X 500 CM. AND HAS A MASS OF 150 KILOGRAMS, WHAT IS THE DENSITY OF THE WOOD IT IS MADE OF? .....- 46 -

3.4 WOULD YOU TRY TO CARRY HOME A BLOCK OF GOLD EQUAL TO 8 LITERS IN VOLUME? .....- 46 -

3.5 WHAT IS THE MASS OF A LITER OF ALCOHOL? .....- 46 -

3.6 HOW MANY CUBIC CENTIMETERS ARE IN A BLOCK OF BRASS WEIGHING 45.5 KILOGRAMS? HOW MANY LITERS? HOW MANY QUARTS? .....- 46 -

3.7 WHAT IS THE WEIGHT IN METRIC TONS OF A CUBE OF LEAD THAT IS 2 METERS LONG ON A SIDE?....- 47 -

3.8 FIND THE VOLUME IN LITERS OF A BLOCK OF PLATINUM WEIGHING 45.5 KILOGRAMS. .....- 47 -

3.9 ONE KILOGRAM OF ALCOHOL IS POURED INTO A CYLINDRICAL CONTAINER, AND FILLS IT TO A DEPTH OF 8 CENTIMETERS. FIND THE CROSS-SECTIONAL AREA OF THE CYLINDER. .....- 48 -

3.10 FIND THE LENGTH OF A LEAD ROD 1 CM IN DIAMETER WHICH WEIGHS 1 KG. .....- 48 -

4. THE PRINCIPLE OF ARCHIMEDES .....- 51 -

4.1 DOES THE WEIGHT APPARENTLY LOST BY A SUBMERGED BODY DEPEND UPON ITS VOLUME OR ITS WEIGHT? .....- 51 -

4.2 A BRICK APPEARED TO LOSE 1 LB. WHEN IT WAS SUBMERGED IN A LIQUID 1 FT. DEEP; HOW MUCH WOULD IT LOSE IF SUSPENDED UNDER THE LIQUID 3 FT. DEEP? ..... - 51 -

4.3 WILL A BOAT RISE OR SINK DEEPER IN THE WATER AS IT PASSES FROM A RIVER TO THE OCEAN? ... - 51 -

4.4 A FISH LIES PERFECTLY STILL NEAR THE CENTER OF AN AQUARIUM. WHAT IS THE AVERAGE DENSITY OF THE FISH? ..... - 52 -

4.5 WHERE DO THE LARGER NUMBERS APPEAR ON HYDROMETERS? ..... - 52 -

4.6 A 150 LB_{METRIC} MAN CAN JUST FLOAT. WHAT IS HIS VOLUME? ..... - 53 -

4.7 EXPLAIN HOW YOU WOULD FIND THE SPECIFIC GRAVITY OF AN IRREGULAR SOLID THAT WILL SINK IN WATER. ..... - 53 -

4.8 NOW WE WANT TO LEARN HOW TO FIND THE SPECIFIC GRAVITY OF A LIQUID. ..... - 53 -

4.9 A PLATINUM BALL WEIGHS 330 GM IN AIR, 315 GM IN WATER, AND 303 GM IN SULPHURIC ACID. FIND THE VOLUME OF THE BALL, AND THE SPECIFIC GRAVITY OF THE SULPHURIC ACID. FIND THE SPECIFIC GRAVITY OF THE PLATINUM BALL. ..... - 54 -

4.10 A PIECE OF PARAFFIN WEIGHS 178 GRAMS IN AIR AND A SINKER WEIGHS 30 GRAMS IN WATER. BOTH TOGETHER WEIGH 8 GRAMS IN WATER. FIND THE SPECIFIC GRAVITY OF THE PARAFFIN. ..... - 54 -

4.11 A CUBE OF IRON 10 CM ON A SIDE WEIGHS 7,500 GM. HOW MUCH WILL IT WEIGH IF IT IS SUBMERGED IN ALCOHOL OF DENSITY 0.82 GM/CM^3? ..... - 55 -

4.12 WHAT FRACTION OF A BLOCK OF WOOD WILL FLOAT ABOVE WATER IF ITS SPECIFIC GRAVITY IS 0.5? 0.6? 0.9? ..... - 55 -

4.13 IF A "RECTANGULAR ICEBERG" RISES 100 FT. ABOVE WATER, HOW FAR DOES IT EXTEND BELOW THE WATER (ASSUME THAT THE DENSITY OF THE ICE IS 0.9 THAT OF SEA WATER). ..... - 55 -

4.14 A BARGE 30 FT X 15 FT SANK 4 INCHES (1/3 FT) WHEN AN ELEPHANT WAS TAKEN ON BOARD. WHAT WAS THE ELEPHANT'S WEIGHT? ..... - 55 -

4.15 A CUBIC FT OF STONE WEIGHED 110 AMERICAN LB IN WATER. WHAT IS ITS SPECIFIC GRAVITY? . - 56 -

4.16 STEEL IS THREE TIMES AS HEAVY AS ALUMINUM. WHEN EQUAL VOLUMES OF EACH ARE SUBMERGED IN WATER, HOW DO THEIR APPARENT LOSSES OF WEIGHT COMPARE? ..... - 56 -

4.17 THE DENSITY OF CORK IS 0.25 GM/CM^3. WHAT FORCE IS REQUIRED TO PUSH ONE CM^3 OF CORK BENEATH THE SURFACE OF WATER? ..... - 56 -

4.18 A BLOCK OF WOOD 15 CM X 10 CM X 4 CM = 600 CM^3 FLOATS IN WATER WITH 1 CM IN THE AIR. FIND THE WEIGHT OF THE BLOCK AND ITS SPECIFIC GRAVITY. ..... - 56 -

4.19 THE SPECIFIC GRAVITY OF MILK IS 1.032. HOW IS ITS SPECIFIC GRAVITY AFFECTED BY REMOVING PART OF THE CREAM? ..... - 57 -

4.20 A PIECE OF SANDSTONE HAVING A SPECIFIC GRAVITY OF 2.6 WEIGHS 480 GRAMS IN WATER. FIND ITS WEIGHT IN AIR. ..... - 57 -

4.21 THE DENSITY OF A STONE IS ABOUT 2.5. IF A BOY CAN LIFT 120 LB, HOW HEAVY A STONE CAN HE LIFT TO THE SURFACE OF A POND? ..... - 57 -

4.22 THE HULL OF A BATTLESHIP IS MADE ALMOST ENTIRELY OF STEEL, ITS WALLS BEING OF STEEL PLATES FROM 6 TO 18 INCHES THICK. EXPLAIN HOW IT CAN FLOAT. ..... - 58 -

5. BAROMETRIC PHENOMENA ..... - 59 -

5.1 IF A GLASS IS COMPLETELY OR PARTIALLY FILLED WITH WATER, AND A PIECE OF WRITING PAPER IS PLACED OVER THE TOP, THE GLASS CAN BE INVERTED (TURNED UPSIDE DOWN) WITHOUT SPILLING THE WATER. WHY? ..... - 59 -

5.2 HOW COULD YOU BUILD A BAROMETER? ..... - 60 -

5.3 IF A SMALL QUANTITY OF AIR SHOULD GET INTO THE SPACE AT THE TOP OF THE MERCURY COLUMN OF A TORRICELLI BAROMETER, HOW WOULD IT AFFECT THE READINGS? WHY? ..... - 61 -

5.4 WOULD THE PRESSURE OF THE ATMOSPHERE HOLD MERCURY AS HIGH IN A TUBE AS LARGE AS YOUR WRIST AS IN ONE HAVING THE DIAMETER OF YOUR FINGER? EXPLAIN. ..... - 61 -

5.5 CALCULATE THE NUMBER OF TONS OF ATMOSPHERIC *FORCE* ON THE ROOF OF AN APARTMENT HOUSE THAT IS 50 FT WIDE AND 100 FT LONG. WHY DOES THE ROOF NOT CAVE IN? ..... - 61 -

5.6 A SPACESHIP WAS MADE TO FLY IN A CURVE TO ALLOW THE ASTRONAUTS INSIDE TO EXPERIENCE "WEIGHTLESSNESS". THE ASTRONAUTS HAD A BALLOON FILLED WITH HELIUM GAS ONBOARD. THE BALLOON FELL TO THE FLOOR OF THE SPACESHIP DURING WEIGHTLESSNESS. WHY? ..... - 62 -

6. THE COMPRESSIBILITY OF LIQUIDS ..... - 64 -

7. THE COMPRESSIBILITY OF AIR ..... - 65 -

7.1 THE DEEPEST MEASUREMENT BY SOUNDING IN THE OCEAN IS ABOUT 6 MILES. FIND THE PRESSURE AT THIS DEPTH. ..... - 65 -

7.2 WHAT SORT OF A CHANGE IN VOLUME DO THE BUBBLES OF AIR WHICH ESCAPE FROM A SEA DIVER'S SUIT EXPERIENCE AS THEY RISE TO THE SURFACE OF THE WATER? ..... - 65 -

7.3 WHY DOES MOUNTAIN CLIMBING OFTEN CAUSE PAIN AND BLEEDING IN THE EARS AND THE NOSE? . - 65 -

7.4 IN THE PICTURE SHOWN, WHAT WOULD HAPPEN IF YOU BLEW AIR VERY HARD INTO THE BOTTLE PARTLY FILLED WITH WATER THROUGH THE TUBE, AND THEN REMOVED YOUR MOUTH FROM THE TUBE. WHY? .. - 65 -

7.5 IF A BOTTLE OR CYLINDER IS FILLED WITH WATER AND INVERTED IN A DISH OF WATER, WITH ITS MOUTH BENEATH THE SURFACE, THE WATER WILL NOT RUN OUT. WHY? ..... - 66 -

7.6 IF A BENT RUBBER TUBE IS INSERTED BENEATH THE MOUTH OF THE CYLINDER AND AIR IS BLOWN IN, IT WILL RISE TO THE TOP OF THE CYLINDER AND DISPLACE THE WATER. EXPLAIN WHY. ..... - 67 -

7.7 WHY MUST THE STOPPER IN A CIDER BARREL BE REMOVED BEFORE THE CIDER WILL FLOW PROPERLY FROM ITS FAUCET? ..... - 68 -

7.8 WHEN A BOTTLE OF WATER IS INVERTED, THE WATER WILL GURGLE OUT OF THE BOTTLE INSTEAD OF POURING IN A STEADY STREAM. WHY? ..... - 68 -

7.9 IF 100 FT^3 OF HYDROGEN GAS AT NORMAL PRESSURE (1ATMOSPHERE) ARE FORCED INTO A STEEL TANK HAVING A CAPACITY OF 5 FT^3, WHAT IS THE GAS PRESSURE IN THE TANK EXPRESSED IN $\frac{lb}{in^2}$? ... - 69 -

7.10 AN AUTOMOBILE TIRE HAVING A CAPACITY OF 1500 IN^3 IS INFLATED TO A PRESSURE OF 90LB/IN^2. WHAT IS THE DENSITY OF THE AIR WITHIN THE TIRE? TO WHAT VOLUME WOULD THE AIR IN THE TIRE EXPAND IF THERE SHOULD BE A BLOW OUT? ..... - 69 -

7.11 WHEN NORMAL CONDITIONS PREVAIL, A GRAM OF AIR OCCUPIES ABOUT 800 CM^3. FIND THE VOLUME A GRAM OF AIR WOULD OCCUPY ON TOP OF MOUNT BLANC (ALTITUDE 15,781 FT) WHERE THE BAROMETER INDICATES THAT THE PRESSURE IS ONLY ABOUT ONE HALF OF WHAT IT IS AT SEA LEVEL. ..... - 70 -

7.12 THE MEAN DENSITY OF THE AIR AT SEA LEVEL IS0.0012GM/CM^3. WHAT IS ITS DENSITY AT THE TOP OF MOUNT BLANC? ..... - 70 -

$P_1 \times D_2 = P_2 \times D_1$. ..... - 70 -

7.13 TWO MEN, GLAISCHER AND COXWELL, ROSE IN THEIR AIR BALLOON UNTIL THE BAROMETER HEIGHT WAS ONLY 18 CENTIMETERS. HOW MANY TIMES DID THEY HAVE TO BREATHE TO OBTAIN THE SAME AMOUNT OF AIR THAT THEY COULD ATTAIN AT THE SURFACE? ..... - 71 -

7.14 ONE CM³ OF AIR AT THE EARTH'S SURFACE WEIGHS 0.00129 GRAMS. IF THIS WERE THE DENSITY OF AIR ALL THE WAY TO THE TOP OF OUR ATMOSPHERE, TO WHAT HEIGHT WOULD THE ATMOSPHERE EXTEND? - 71 -

8. PNEUMATIC DEVICES..... - 72 -

8.1 A WATER TANK 8 FEET DEEP, STANDING SOME DISTANCE ABOVE THE GROUND, CLOSED EVERYWHERE EXCEPT AT THE TOP, IS TO BE EMPTIED. THE ONLY MEANS OF EMPTYING IT IS A FLEXIBLE TUBE. ..... - 72 -

8.2 KEROSENE HAS A SPECIFIC GRAVITY OF 0.8 $\frac{gm}{cm^3}$. OVER WHAT HEIGHT CAN IT BE SIPHONED USING A VACUUM AT NORMAL ATMOSPHERIC PRESSURE? ..... - 73 -

8.3 LET A SIPHON BE MADE BY FILLING A FLASK 1/3 FULL OF WATER, CLOSING IT WITH A CORK THROUGH WHICH PASS TWO PIECES OF GLASS TUBING AND THEN INVERTING SO THAT THE LOWER END OF ONE OF THE TUBES IS IN A BEAKER OF WATER. IF THE OTHER TUBE IS OF CONSIDERABLE LENGTH, THE FOUNTAIN FORMED IN THE FLASK WILL PLAY FORCIBLY AND CONTINUOUSLY UNTIL THE BEAKER IS EMPTIED. EXPLAIN. ..... - 73 -

8.4 DRAW A LIFTING TYPE WATER PUMP AND EXPLAIN WHAT HAPPENS ON THE UP AND DOWN STROKES. - 74 -

8.5 DRAW A DIAGRAM OF A WATER PUMP OPERATED BY FORCE WITH AN AIR DOME AND EXPLAIN WHAT HAPPENS DURING THE UP AND DOWN STROKES. ..... - 75 -

8.6 IF THE CYLINDER OF AN AIR EVACUATION PUMP IS OF THE SAME SIZE AS A CONTAINER, WHAT FRACTIONAL PART OF THE AIR IS REMOVED FROM THE CONTAINER BY ONE COMPLETE STROKE OF THE PUMP? ..... - 77 -

8.7 IF THE CYLINDER OF AN AIR EVACUATION PUMP IS ONE 1/3 THE SIZE OF A CONTAINER, WHAT FRACTIONAL PART OF THE AIR WILL BE LEFT IN THE CONTAINER AFTER 5 STROKES? ..... - 78 -

8.8 THEORETICALLY, CAN A CONTAINER EVER BE COMPLETELY EXHAUSTED BY AN EVACUATION PUMP, EVEN IF THE PUMP IS MECHANICALLY PERFECT? ..... - 78 -

8.9 EXPLAIN BY REFERENCE TO ATMOSPHERIC PRESSURE WHY A BALLOON RISES. ..... - 78 -

8.10 A PISTON IS IN A TUBE. THE AIR PRESSURE ON THE RIGHT SIDE OF THE PISTON IS EQUAL TO TWICE THE ATMOSPHERIC PRESSURE, WHILE THE AIR PRESSURE ON THE LEFT SIDE OF THE PISTON IS ½ OF ATMOSPHERIC PRESSURE. WHAT FORCE ACTS ON THE PISTON WHEN ITS CROSS-SECTIONAL AREA IS 50 SQUARE CENTIMETERS? ..... - 79 -

8.11 WHAT DETERMINES HOW HIGH A BALLOON WILL RISE? UNDER WHAT CONDITIONS WILL IT BEGIN TO DESCEND? ..... - 79 -

8.12 IF A DIVING BELL IS SUNK UNTIL THE LEVEL OF THE WATER WITHIN IT IS 1033 CENTIMETERS BENEATH THE SURFACE OF THE WATER, TO WHAT FRACTION OF ITS INITIAL VOLUME HAS THE ENCLOSED AIR BEEN REDUCED? ..... - 79 -

8.13 IF A DIVER'S TANK HAS A VOLUME OF 2 FT³, AND CONTAINS A PRESSURE OF 40 ATMOSPHERES, TO WHAT VOLUME WILL THE AIR EXPAND WHEN IT IS RELEASED AT A DEPTH OF 34 FEET UNDER THE WATER SURFACE? ..... - 80 -

8.14 A SUBMARINE WEIGHS 1800 AMERICAN TONS WHEN ITS SUBMERGING TANKS ARE EMPTY, AND IN THAT CONDITION 10% OF ITS VOLUME IS ABOVE WATER. WHAT WEIGHT OF WATER MUST BE LET INTO THE SUBMERGING TANKS TO JUST SUBMERGE THE BOAT? ..... - 80 -

9. MOLECULAR MOTIONS ..... - 82 -

9.1 IF A CONTAINER FILLED WITH HYDROGEN AT A PRESSURE OF 2 ATMOSPHERES HAS A SMALL LEAK, THE PRESSURE IN THE CONTAINER FALLS OFF AT A RATE FOUR TIMES FASTER THAN IF THE CONTAINER WAS FILLED WITH AIR. CAN YOU EXPLAIN WHY THIS IS SO? ..... - 82 -

9.2 WHAT IS THE DENSITY OF AIR WITHIN AN AUTOMOBILE TIRE THAT IS INFLATED TO A PRESSURE OF 80 LB/IN^2? ..... - 82 -

9.3 ONE LITER OF AIR AT 76CM OF MERCURY ATMOSPHERIC PRESSURE IS COMPRESSED SO AS TO OCCUPY 400 CM^3. WHAT IS THE PRESSURE AGAINST THE WALLS OF THE CONTAINER? ..... - 82 -

9.4 IF AN OPEN CONTAINER CONTAINS 250 GM OF AIR WHEN THE BAROMETRIC HEIGHT IS 750MM MERCURY, WHAT WEIGHT WILL THE SAME CONTAINER AT THE SAME TEMPERATURE CONTAIN WHEN THE BAROMETRIC PRESSURE IS 740 MM MERCURY? ..... - 82 -

AT 750MM MERCURY THE AIR WEIGHS 250 GM. AT 740MM MERCURY IT WILL WEIGH $\frac{740}{750}$ AS MUCH. AT 740MM MERCURY THE CONTAINER OF AIR WILL WEIGH $250gm \times \frac{740}{750} = 246.66gm$ ..... - 82 -

9.5 (A) FIND THE PRESSURE TO WHICH A DIVER WAS SUBJECTED WHO DESCENDED TO A DEPTH OF 304 FT. - 82 -

9.6 A BUBBLE OF AIR THAT ESCAPED FROM THE DIVER'S SUIT IN PROBLEM 9.5 WOULD INCREASE TO HOW MANY TIMES ITS VOLUME ON REACHING THE SURFACE? ..... - 83 -

9.7 SALT IS HEAVIER THAN WATER. WHY DOES NOT ALL OF THE SALT IN A MIXTURE OF SALT AND WATER SETTLE TO THE BOTTOM? ..... - 83 -

10. THE COMPOSITION AND RESOLUTION OF FORCES ..... - 84 -

10.1 THE ENGINES OF A STEAMBOAT CAN DRIVE IT 12 MILES/HOUR. HOW FAST CAN IT GO UP A STREAM IN WHICH THE CURRENT IS 3 MILES/HOUR? HOW FAST CAN IT COME DOWN THE SAME STREAM? ..... - 84 -

10.2 THE WIND DRIVES A BOAT EAST WITH A FORCE THAT CAUSES IT TO MOVE EASTWARD 12 MILES/HOUR. THE PROPELLERS OF THE BOAT DRIVE IT SOUTH WITH A FORCE THAT CAUSES IT TO MOVE SOUTHWARD 15 MILES/HOUR. WHAT IS THE RESULTING SPEED AND DIRECTION THAT THE BOAT MOVES? ..... - 84 -

10.3 A BARGE IS ANCHORED IN A RIVER DURING A STORM. IF THE WIND ACTS EASTWARD ON IT WITH A FORCE OF 3000LB, AND THE TIDE NORTHWARD WITH A FORCE OF 4000LB, WHAT IS THE DIRECTION AND STRENGTH OF THE RESULTING FORCE? ..... - 85 -

10.4 A PICTURE WEIGHING 20 POUNDS HANGS ON A CORD WHOSE PARTS MAKE AN ANGLE OF 120 DEGREES WITH EACH OTHER. FIND THE TENSION IN EACH PART OF THE CORD. ..... - 86 -

10.5 IF A BARREL WEIGHS 200 POUNDS, WITH WHAT FORCE MUST A MAN PUSH PARALLEL TO THE RAMP TO KEEP THE BARREL FROM MOVING WHEN THE LENGTH OF THE RAMP IS 3 METERS AND THE HEIGHT OF THE RAMP IS 1 METER? ..... - 87 -

10.6 A BLOCK OF ICE WEIGHING 200 POUNDS IS HELD AT REST ON AN INCLINED PLANE THAT IS 12 FEET LONG AND 5 FEET HIGH. USING THE "RESOLUTION AND PROPORTION METHOD", (A) FIND THE COMPONENT OF ITS WEIGHT THAT TENDS TO MAKE THE ICE SLIDE DOWN THE INCLINE. (B) WITH WHAT FORCE MUST ONE PUSH TO KEEP THE ICE AT REST? (C) HOW GREAT IS THE COMPONENT FORCE THAT TENDS TO BREAK THE INCLINE? ..... - 88 -

10.7 A TIGHTROPE 20 METERS LONG IS DEPRESSED ONE METER AT THE CENTER WHEN A MAN WEIGHING 60 KILOGRAMS STANDS ON IT. WHAT IS THE TENSION IN THE ROPE? ..... - 89 -

10.8 THE ANCHOR ROPE OF A KITE BALLOON MAKES AN ANGLE OF 60 DEGREES WITH THE EARTH. IF THE LIFTING FORCE OF THE BALLOON IS 1000 POUNDS, FIND THE PULL OF THE BALLOON ON THE ROPE AND THE HORIZONTAL FORCE OF THE WIND ON THE BALLOON. ..... - 90 -

10.9 A CANAL BOAT AND THE ENGINE TOWING IT MOVE IN PARALLEL PATHS WHICH ARE 50 FEET APART. THE TOW ROPE IS 130 FEET LONG, AND THE FORCE (EFFORT) APPLIED TO THE END OF THE ROPE IS 1300 POUNDS. FIND THE STRENGTH OF THE COMPONENT OF THE 1300 POUND PULL THAT ACTS PARALLEL TO THE PATH OF THE BOAT. ..... - 90 -

10.10 A BOY IS FLYING A KITE. DESCRIBE THE FORCES ACTING ON THE KITE. ..... - 91 -

11. GRAVITATION ..... - 93 -

11.1 EXPLAIN WHY THE TOY SHOWN WILL NOT CONTINUE TO LIE ON ITS SIDE WHEN IT IS RELEASED, BUT RAISE TO THE VERTICAL POSITION. ..... - 93 -

11.2 WHERE IS THE CENTER OF GRAVITY OF A HOOP; OF A BOX? ..... - 94 -

11.4 WHAT IS THE PURPOSE OF BALLAST IN A SHIP? ..... - 95 -

11.5 WHAT IS THE MOST STABLE POSITION OF A BRICK? ..... - 95 -

11.6 IN WHAT STATE OF EQUILIBRIUM IS A PENDULUM AT REST? ..... - 95 -

11.7 WHAT IS THE PURPOSE OF THE TAIL OF A KITE? ..... - 96 -

11.8 DO YOU GET MORE SUGAR TO THE KILOGRAM IN CALCUTTA, INDIA THAN IN ABERDEEN, SCOTLAND WHEN USING A BEAM BALANCE? WHEN USING A SPRING BALANCE? ..... - 96 -

11.9 WHAT CHANGE WOULD THERE BE IN YOUR WEIGHT IF YOUR MASS WERE TO BECOME FOUR TIMES AS GREAT AND THAT OF THE EARTH THREE TIMES, THE RADIUS OF THE EARTH REMAINING THE SAME? ..... - 97 -

11.10 THE PULL OF THE EARTH ON A BODY AT THE EARTH'S SURFACE IS 100 KILOGRAMS. THE RADIUS OF THE EARTH IS ABOUT 4000 MILES. FIND THE PULL OF THE EARTH ON THE SAME BODY 4000 MILES ABOVE THE SURFACE OF THE EARTH. ..... - 97 -

12. FALLING BODIES ..... - 99 -

12.1 IF A BODY STARTS FROM REST AND TRAVELS WITH A CONSTANT ACCELERATION OF 10 FT/S², HOW FAST WILL IT BE GOING AT THE CLOSE OF THE FIFTH SECOND? ..... - 99 -

12.2 A BODY STARTING FROM REST AND MOVING WITH UNIFORMLY ACCELERATED MOTION ACQUIRED A VELOCITY OF 60 FT/S IN 5SECONDS. FIND THE ACCELERATION OF THE BODY. ..... - 100 -

12.3 A BODY MOVING WITH UNIFORMLY ACCELERATED MOTION TRAVELED 6 FT DURING THE FIRST SECOND. FIND ITS VELOCITY AT THE END OF THE FOURTH SECOND. ..... - 100 -

12.4 A BALL THROWN ACROSS THE ICE STARTED WITH A VELOCITY OF 80FT/S. IT WAS RETARDED BY FRICTION AT THE RATE OF 2FT/S².HOW FAR DID IT ROLL? ..... - 100 -

12.5 A BULLET WAS FIRED WITH A VELOCITY OF 2400 FT/S FROM A RIFLE HAVING A BARREL 2FT LONG. FIND THE AVERAGE VELOCITY OF THE BULLET WHILE MOVING THE LENGTH OF THE BARREL. ..... - 101 -

12.6 A BALL WAS THROWN VERTICALLY INTO THE AIR WITH A VELOCITY OF 160 FT/S. HOW LONG DID IT REMAIN IN THE AIR? ..... - 101 -

12.7 A BASEBALL IS THROWN UPWARD. IT REMAINED IN THE AIR 6 SECONDS. WITH WHAT VELOCITY DID IT LEAVE THE HAND? ..... - 101 -

12.8 A man dropped a ball from the top of the Woolworth building in New York City, 780 feet above Broadway. How many seconds did it fall? ..... - 102 -

12.9 A bomb fell 10 seconds from an airplane before striking the ground. How high was the airplane? ..... - 102 -

12.10 What speed does a steel ball reach before striking the earth if it is dropped from the Eiffel Tower, 335 meters high? ..... - 102 -

12.11 If the acceleration of a marble rolling down an inclined plane is 20cm/s², what velocity will it have at the bottom, the plane being 7 meters long? ..... - 102 -

12.12 If a man can jump 3 feet high on the earth, how high could he jump on the moon, where g is 1/6 as much? ..... - 102 -

12.13 The brakes were set on a train running 60 miles per hour. The train stopped 20 seconds later. Find the deceleration in ft/s², and the distance the train traversed after the brakes were applied. ..... - 103 -

12.14 How far will a body fall from rest during the first half-second? ..... - 103 -

12.15 With which velocity must a ball be shot upward to reach a height of 555 feet? ..... - 103 -

12.16 What force supports an airplane in flight? ..... - 103 -

12.17 A clock that makes a certain swing (1/2 period) per second in New York City is 99.3 cm (=39.1 inches) long. Account for the fact that this same pendulum at the equator must be 39 inches long, while at the earth's poles it must be 39.2 inches long. ..... - 104 -

12.18 The swing of a pendulum is equal to one-half of the period of a pendulum. How long is the pendulum having a period of 3 seconds, of ½ second, of 1/3 second? ..... - 105 -

12.19 A man was let down over a cliff with a rope to a depth of 500 ft. What was his period as a pendulum? ..... - 106 -

13. NEWTON'S LAWS OF MOTION ..... - 107 -

13.1 What principle is applied when tightening the head of a hammer by pounding on the handle? ..... - 107 -

13.2 What keeps the car from falling when it is at position B? ..... - 107 -

13.3 Why does a flywheel cause machinery to run more smoothly? ..... - 108 -

13.4 Balance a small card on your finger and then place a coin on it so that the coin is also balanced on your finger. Snap the card away quickly with the fingers of your other hand and note that the coin remains balanced on your finger. What principle is illustrated? - 108 -

13.5 Is it any easier to walk toward the rear than toward the front of a rapidly moving train? ..... - 108 -

13.6 Suspend a weight by a string. Attach a piece of the same string to the bottom of the weight. If the lower string is pulled with a sudden jerk, it breaks, but if it is pulled steadily, the upper string will break. Why? ..... - 109 -

13.7 Where does a body weigh more, at the poles or at the equator? Give two reasons why. - 109 -

13.8 Three trains are all running at the velocity of 60 kilometers per hour. ..... - 109 -

WHAT IS THE VELOCITY OF TRAIN A WITH REFERENCE TO TRAIN B, TO TRAIN C? ..... - 109 -

13.9 IF A WEIGHT IS DROPPED FROM THE ROOF TO THE FLOOR OF A MOVING TRAIN CAR, WILL IT STRIKE THE POINT ON THE FLOOR WHICH WAS DIRECTLY BENEATH ITS STARTING POINT? ..... - 110 -

13.10 WHY IS A TRAIN TRACK BANKED TOWARD THE INSIDE OF THE CURVE WHEN IT TURNS TO CHANGE DIRECTIONS? ..... - 110 -

13.11 IF THE EARTH WERE TO STOP ROTATING, WOULD OBJECTS AT THE EQUATOR WEIGH MORE OR LESS? WHY? ..... - 110 -

13.12 HOW IS NEWTON'S THIRD LAW INVOLVED IN ROTARY LAWN OR IRRIGATION SPRINKLERS? ..... - 110 -

13.13 HOW DOES A CLOTHES DRYING CENTRIFUGE WORK? ..... - 110 -

13.14 EXPLAIN HOW REACTION PUSHES AN OCEAN LINER OR AN AIRPLANE FORWARD. ..... - 111 -

13.15 IF ONE BALL IS THROWN HORIZONTALLY FROM THE TOP OF A TOWER, AND ANOTHER IS DROPPED FROM THE TOWER AT THE SAME TIME, WHICH WILL STRIKE THE EARTH AT THE BOTTOM OF THE TOWER FIRST? ..... - 111 -

13.16 IF A RIFLE BULLET WERE FIRED WITH A VELOCITY OF 300 METERS PER SECOND FROM A TOWER HAVING A HEIGHT OF 19.6 METERS, HOW FAR WOULD IT STRIKE THE EARTH AWAY FROM THE BASE OF THE TOWER IF THERE WERE NO AIR RESISTANCE? ..... - 111 -

13.17 THE HYDRAULIC RAM IS A PRACTICAL ILLUSTRATION OF THE PRINCIPLE OF INERTIA. WITH ITS AID, WATER FROM A POND CAN BE RAISED INTO A TANK THAT STANDS AT A HIGHER LEVEL THAN THE POND. EXPLAIN HOW IT WORKS. ..... - 111 -

13.18 IF TWO MEN WERE STANDING ON A FRICTIONLESS FROZEN POND, HOW COULD THEY GET OFF OF THE POND? ..... - 113 -

13.19 IF A 10 G BULLET IS SHOT FROM A 5 KG GUN WITH A VELOCITY OF 400 M/S, WHAT IS THE BACKWARD VELOCITY OF THE GUN? ..... - 114 -

13.20 IF A TEAM OF HORSES PULLS 500LB WHEN DRAWING A WAGON, WITH WHAT FORCE DOES THE WAGON PULL BACKWARD ON THE TEAM? ..... - 114 -

13.21 WHY DOES A FALLING MASS, ON STRIKING THE EARTH, EXERT A FORCE IN EXCESS OF ITS WEIGHT? . - 114 -

13.22 A FORCE OF 1 NEWTON ACTS FOR THREE SECONDS ON A MASS OF 1 KILOGRAM. WHAT VELOCITY IS IMPARTED TO THE MASS? ..... - 115 -

13.23 HOW LONG MUST A 100 NEWTON FORCE ACT ON A 20 KILOGRAM MASS TO IMPART A VELOCITY OF 40 METERS/SECOND TO IT? ..... - 115 -

13.24 A FORCE OF 1 NEWTON ACTS ON 1 KILOGRAM FOR 1 SECOND. HOW FAR IS THE KILOGRAM MOVED AT THE END OF THE SECOND? ..... - 115 -

14. MOLECULAR FORCES IN SOLIDS ..... - 116 -

14.1 TELL HOW YOU CAN, USING HOOKE'S LAW AND A 20 KILOGRAM WEIGHT, MAKE A SCALE FOR A 40 KILOGRAM SPRING BALANCE. ..... - 116 -

14.2 A BROKEN PIECE OF IRON OR STEEL CAN BE MADE SOLID AGAIN BY "WELDING". THE TWO BROKEN ENDS ARE HEATED WHITE HOT AND THEN POUNDED TOGETHER, OR ARE MELTED BY A GAS FLAME OR AN ELECTRIC ARC. GOLD FOIL IS WELDED TOGETHER COLD IN THE PROCESS OF FILLING A TOOTH. EXPLAIN WHAT "WELDING" IS. ..... - 117 -

14.3 A PIECE OF BROKEN WOOD CAN BE REPAIRED WITH GLUE. WHAT DOES THE GLUE DO? ..... - 117 -

14.4 WHY ARE SPRINGS USUALLY MADE OF STEEL INSTEAD OF COPPER? ..... - 117 -

14.5 IF A GIVEN WEIGHT IS REQUIRED TO BREAK A GIVEN WIRE, HOW MUCH FORCE IS REQUIRED TO BREAK TWO SUCH WIRES HANGING SIDE BY SIDE? ..... - 117 -

15. MOLECULAR FORCES IN LIQUIDS ..... - 118 -

15.1 EXPLAIN HOW CAPILLARY ATTRACTION BECOMES USEFUL IN A FOUNTAIN PEN POINT. ..... - 118 -

15.2 CANDLE WAX CAN BE REMOVED FROM CLOTHING BY COVERING IT WITH BLOTTING PAPER AND THEN IRONING IT WITH A HOT IRON. EXPLAIN HOW THIS WORKS. ..... - 118 -

15.3 HOW WILL A PIECE OF SHARP CORNERED GLASS BECOME ROUNDED WHEN HEATED TO REDNESS BY A FLAME? ..... - 118 -

15.4 THE LEADS FOR PENCILS ARE MADE BY SUBJECTING POWDERED GRAPHITE TO ENORMOUS PRESSURES PRODUCED BY HYDRAULIC MACHINES. EXPLAIN HOW THE PRESSURE CHANGES THE POWDER INTO A COHERENT MASS. ..... - 118 -

15.5 FLOAT TWO MATCHES AN INCH APART ON WATER. TOUCH THE WATER BETWEEN THEM WITH A HOT WIRE. THE MATCHES WILL SPRING APART. WHAT DOES THIS SHOW ABOUT THE EFFECT OF HEAT ON THE SURFACE TENSION OF WATER? ..... - 118 -

15.6 REPEAT THE EXPERIMENT IN EXERCISE 15.5, TOUCHING THE WATER WITH A WIRE THAT HAS BEEN DIPPED IN ALCOHOL. THE MATCHES RAPIDLY SPRING APART AGAIN. WHAT DO YOU INFER ABOUT THE RELATIVE SURFACE TENSIONS OF ALCOHOL AND WATER? ..... - 118 -

15.7 FASTEN A BIT OF GUM CAMPHOR TO ONE END OF HALF OF A TOOTHPICK AND LAY IT ON THE SURFACE OF A LARGE CONTAINER OF CLEAN, STILL WATER. EXPLAIN THE MOTION OF THE TOOTHPICK. ..... - 119 -

15.8 SHOT ARE MADE BY POURING MOLTEN LEAD THROUGH A SIEVE ON TOP OF A TALL TOWER AND CATCHING THEM IN WATER AT THE BOTTOM OF THE TOWER. WHY ARE THE SHOT SPHERICAL? ..... - 119 -

15.9 EXPLAIN HOW CAPILLARY ACTION MAKES AN IRRIGATION SYSTEM SUCCESSFUL. ..... - 119 -

15.10 WHEN BUILDING A MACADAM ROAD, COARSE STONES ARE PLACED AT THE BOTTOM, SMALLER STONES ON TOP OF THEM, AND FINALLY TINY GRANULES ARE TIGHTLY ROLLED TOGETHER BY MEANS OF A STREET ROLLER. EXPLAIN HOW THIS ARRANGEMENT OF MATERIALS HELPS KEEP THE ROAD DRY. .... - 119 -

15.11 WHAT FORCE IS MAINLY RESPONSIBLE FOR THE UPWARD RETURN OF WATER THAT HAS GRAVITATED INTO THE SOIL? ..... - 119 -

15.12 WHY DO FISH IN AN AQUARIUM DIE IF THE WATER IS NOT FREQUENTLY REFRESHED? ..... - 120 -

15.13 EXPLAIN THE APPARENT GENERATION OF AMMONIA GAS WHEN AQUA AMMONIA IS HEATED. .... - 120 -

15.14 WHY IN THE FIGURE SHOWN WILL THE WATER FLOW MUCH FASTER AFTER REACHING POINT F? . - 120 -

16. MEASUREMENT OF WORK ..... - 121 -

16.1 TO DRAG A TRUNK WEIGHING 120 POUNDS REQUIRED A FORCE OF 40 POUNDS. HOW MUCH WORK MUST BE DONE TO DRAG THIS TRUNK THREE YARDS? ..... - 121 -

16.2 A CARPENTER PUSHED WITH A FORCE OF 5 POUNDS WHEN REMOVING A SHAVING OF WOOD THAT WAS FOUR FEET LONG. HOW MUCH WORK WAS DONE? ..... - 121 -

16.3 HOW MANY FT-LB OF WORK DOES A 150-LB MAN ACCOMPLISH WHEN CLIMBING A MOUNTAIN THAT IS 6300 FT HIGH? ASSUME THAT THE MAN STARTED CLIMBING WHEN HE WAS AT AN ALTITUDE OF 300 FT. .... - 121 -

16.4 A HORSE PULLS A METRIC TON OF COAL TO THE TOP OF A HILL 30 METERS HIGH. EXPRESS THE WORK ACCOMPLISHED IN NEWTON-METERS. ..... - 121 -

16.5 IF 20,000 INHABITANTS OF A CITY USE AN AVERAGE OF 20 LITERS OF WATER EACH DAY FOR EACH PERSON, HOW MUCH WORK MUST THE ENGINES THAT PUMP THE WATER DO TO DELIVER THE WATER TO THE CITY IF THE CITY IS 75 METERS HIGHER THAN THE WATER SOURCE? ..... - 121 -

16.6 IF A HYDRAULIC ELEVATOR CARRIES A LOAD OF 20,000 LB. AND MOVES 4 TIMES AS FAST AS THE PISTON DRIVING IT, WHAT FORCE MUST BE APPLIED TO THE PISTON? ..... - 122 -

17. WORK AND THE PULLEY ..... - 123 -

17.1 ALTHOUGH THE MECHANICAL ADVANTAGE OF THE SINGLE FIXED PULLEY IS ONLY 1, IT IS EXTENSIVELY USED IN CONNECTION WITH CLOTHES LINES, AWNINGS, OPEN WELLS, AND FLAGS. EXPLAIN. ..... - 123 -

17.2 DRAW A DIAGRAM OF A SET OF PULLEYS BY WHICH A LOAD OF 250 POUNDS CAN BE RAISED BY A FORCE OF 50 LB. ..... - 123 -

17.3 DRAW A DIAGRAM OF A SET OF PULLEYS BY WHICH A FORCE OF 50LB CAN SUPPORT A WEIGHT OF 200LB. ..... - 124 -

17.4 TWO MEN PULLING 50 LB EACH LIFTED 300 LB USING A SYSTEM OF PULLEYS. IF THERE WERE NO FRICTION, HOW MANY FEET OF ROPE DID THE TWO MEN PULL DOWN IN RAISING THE WEIGHT 20 FEET HIGH? - 125 -

18. WORK AND THE LEVER ..... - 126 -

18.1 IN WHICH OF THE THREE CLASSES OF LEVERS DOES A WHEELBARROW , A GROCER'S SCALES, A PAIR OF PLIERS, TANGS, A CLAW HAMMER, A PUMP HANDLE BELONG? ..... - 126 -

18.2 EXPLAIN THE PRINCIPLE OF WEIGHING IN THE FIGURE SHOWN. ..... - 126 -

18.3 IF YOU KNEW YOUR OWN WEIGHT, HOW COULD YOU DETERMINE THE WEIGHT OF A COMPANION? - 127 -

18.4 HOW WOULD YOU USE A CROWBAR AS A TYPE 1 LEVER TO TURN A HEAVY OBJECT OVER? HOW WOULD YOU USE A CROWBAR AS A TYPE 2 LEVER TO TURN A HEAVY OBJECT OVER? ..... - 128 -

18.5 WHY DO SHEET METAL SHEARS HAVE LONG HANDLES AND SHORT BLADES? ..... - 128 -

18.6 USING A REFERENCE TO MOMENTS, EXPLAIN WHY A DOOR CAN BE CLOSED MORE EASILY BY PUSHING ON ITS DOORKNOB OR HANDLE THAN NEAR ITS HINGES? ..... - 128 -

18.7 TWO BOYS CARRY A LOAD OF 60LB ON A POLE BETWEEN THEM. IF THE LOAD IS 4 FT. AWAY FROM ONE BOY AND 6 FT. AWAY FROM THE OTHER, HOW MANY POUNDS DOES EACH BOY CARRY? ..... - 129 -

18.8 WHERE MUST A LOAD OF 100 LB BE PLACED ON A STICK 10 FEET LONG, IF A MAN WHO HOLDS ONE END IS TO SUPPORT 30 LB WHILE THE OTHER MAN SUPPORTS 70 LB? ..... - 130 -

18.9 ONE END OF A PIANO MUST BE RAISED TO REPAIR A BROKEN CASTER. THE FORCE REQUIRED IS 240 LB. MAKE A DIAGRAM TO SHOW HOW A 6 FOOT STEEL BAR CAN BE USED AS A SECOND CLASS LEVER TO RAISE THE PIANO WITH A FORCE OF 40 LB. ..... - 130 -

18.10 WHEN A LOAD IS CARRIED OVER THE SHOULDER WITH A STICK, WHY DOES THE PRESSURE ON THE SHOULDER BECOME GREATER AS THE LOAD IS MOVED FARTHER OUT ON THE STICK? ..... - 131 -

18.11 A SAFETY VALVE AND WEIGHT ARE ARRANGED AS SHOWN. IF $\overline{ab}$ IS 1 ½ INCHES AND $\overline{bc}$ IS 10 ½ INCHES, THEN $\overline{ac}$ (THE TOTAL ARM LENGTH) IS 12 IN. WHAT EFFECTIVE STEAM PRESSURE IN LB/IN^2 IS REQUIRED TO ACT ON THE VALVE TO UNSEAT IT, IF THE AREA OF THE VALVE IS ½ IN^2 AND THE WEIGHT OF THE BALL IS 4 LB.? ..... - 132 -

18.12 THE DIAMETERS OF THE PISTON AND CYLINDER OF A HYDRAULIC PRESS ARE 3INCHES AND 30 INCHES RESPECTIVELY. THE PISTON ROD IS ATTACHED 2 FEET FROM THE FULCRUM OF A LEVER 12 FEET LONG. WHAT FORCE MUST BE APPLIED TO THE END OF THE LEVER TO MAKE THE PRESS EXERT A FORCE OF 5000 POUNDS? ..... - 133 -

18.13 THREE BOYS SIT ON A SEESAW AS FOLLOWS: A (75LB, 4FT RIGHT OF THE FULCRUM, F), B (100LB,7FT RIGHT OF F) AND C (UNKNOWN WEIGHT, 7FT LEFT OF F). THE SEESAW IS BALANCED WHEN A MAN PUSHES UPWARD WITH A FORCE OF 25LB 12FT TO THE RIGHT OF F. HOW MUCH DOES BOY C WEIGH? - 134 -

19. THE PRINCIPLE OF WORK ..... - 135 -

19.1 A 1500LB SAFE MUST BE RAISED 5FT. THE FORCE THAT CAN BE APPLIED IS 250LB. WHAT IS THE SHORTEST INCLINED PLANE THAT CAN BE USED TO ACCOMPLISH THE WORK? ..... - 135 -

19.2 A 300 LB BARREL WAS ROLLED UP A PLANK 12 FEET LONG INTO A DOORWAY 3 FEET HIGH. WHAT FORCE WAS APPLIED PARALLEL TO THE PLANK? ..... - 135 -

19.3 A FORCE OF 800 NEWTON ON A WHEEL WHOSE DIAMETER IS 3 METERS BALANCES A WEIGHT OF 1500 NEWTON ON THE AXLE. FIND THE DIAMETER OF THE AXLE. ..... - 135 -

19.4 THE HAND WINCH USED TO LIFT THE ANCHOR OF A LARGE SAILING SHIP HAS A DIAMETER OF 12 INCHES. IF THE FOUR WINCH LEVERS ARE 6 FEET LONG, WHAT FORCE MUST BE EXERTED BY EACH OF FOUR MEN TO RAISE THE ANCHOR IF IT WEIGHS 2000 POUNDS? ..... - 135 -

19.5 IF, IN THE COMPOUND LEVER SHOWN, AC = 6 METERS, BC = 1 METER, DF = 4 METERS, FG = 2/3 METER, HJ = 5 METERS, AND IJ = 2 METERS, WHAT FORCE APPLIED AT E WILL SUPPORT A FORCE OF 2000 NEWTON AT R? ..... - 136 -

19.6 THE HAY SCALES SHOWN CONSIST OF A COMPOUND LEVER HAVING FULCRUMS AT F, F', F'', AND F'''. IF FO AND F'O' ARE 6 INCHES LONG, FE AND F'E ARE 5 FEET LONG, F''N IS 1 FOOT, F''M IS 6 FEET, RF''' IS 2 INCHES, AND F'''S IS 20 INCHES, HOW MANY POUNDS AT W WILL BE REQUIRED TO BALANCE A WEIGHT OF ONE TON ON THE PLATFORM? ..... - 137 -

19.7 IN THE WINDLASS SHOWN, THE CRANK HANDLE HAS A LENGTH OF 2 FT, AND THE BARREL A DIAMETER OF 8 INCHES. THERE ARE 20 TEETH ON THE SMALL GEAR AND 60 TEETH ON THE LARGE ONE. WHAT IS THE MECHANICAL ADVANTAGE OF THE ARRANGEMENT? ..... - 138 -

19.8 IF IN THE CRANE SHOWN THE CRANK ARM HAS A LENGTH OF ½ METER AND THE GEAR WHEELS A,B,C AND D HAVE RESPECTIVELY 12, 48, 12, AND 60 TEETH, WHILE THE AXLE OVER WHICH THE CHAIN RUNS HAS A RADIUS OF 10 CM, WHAT IS THE MECHANICAL ADVANTAGE OF THE CRANE? ..... - 138 -

19.9 IF A WORM WHEEL HAS 30 TEETH, AND THE CRANK HANDLE IS 25 CM LONG, WHILE THE RADIUS OF THE AXLE IS 3 CM, WHAT IS THE MECHANICAL ADVANTAGE OF THE ARRANGEMENT? ..... - 139 -

19.10 A SMALL JACKSCREW HAS 20 THREADS TO EACH INCH. A LEVER 3.5 INCHES LONG WILL PRODUCE WHAT MECHANICAL ADVANTAGE? ..... - 140 -

19.11 THE SCREW OF A LETTER PRESS HAS 5 THREADS TO THE INCH, AND THE DIAMETER OF THE HAND WHEEL IS 12 INCHES. IF THERE WERE NO FRICTION, WHAT PRESSURE WOULD RESULT FROM A ROTATING FORCE OF 20 LB APPLIED TO THE WHEEL? ..... - 141 -

19.12 EIGHT JACK SCREWS, EACH OF WHICH HAS A PITCH OF ¼ INCH AND A LEVER ARM OF 18 INCHES ARE BEING WORKED SIMULTANEOUSLY TO RAISE A BUILDING WEIGHING 100,000 POUNDS. WHAT FORCE WOULD HAVE TO BE EXERTED AT EACH LEVER IF THERE WERE NO FRICTION? ..... - 141 -

19.13 WHAT IS GAINED WHEN USING A MACHINE HAVING A MECHANICAL ADVANTAGE OF ¼? ..... - 141 -

20. POWER AND ENERGY ..... - 142 -

20.1 A STICK OF DYNAMITE HAS GREAT CAPACITY FOR DOING WORK. BEFORE THE EXPLOSION OCCURS, IS THE ENERGY IN THE POTENTIAL OR THE KINETIC FORM? ..... - 143 -

20.2 EXPLAIN THE USE OF SANDBLASTING WHEN CLEANING METAL CASTINGS, MAKING FROSTED GLASS, CUTTING GLASSWARE, OR CLEANING THE WALLS OF STONE BUILDINGS. ..... - 143 -

20.3 HOW MUCH WORK IS REQUIRED TO LIFT THE 500 LB WEIGHT OF A PILE DRIVER 30 FEET? HOW MUCH POTENTIAL ENERGY IS THEN STORED IN IT? HOW MUCH WORK CAN IT DO WHEN IT FALLS? ..... - 143 -

20.4 A MAN WEIGHING 198 LB WALKED TO THE TOP OF THE STAIRWAY OF THE WASHINGTON MONUMENT (500 FT. HIGH) IN 10 MINUTES. AT WHAT HORSEPOWER RATE DID HE WORK? ..... - 143 -

20.5 A FARM TRACTOR DREW A GANG PLOW AT A RATE OF 2 ½ MILES PER HOUR, MAINTAINING AN AVERAGE DRAWBAR PULL OF 1,500LB. AT WHAT AVERAGE HORSEPOWER WAS THE TRACTOR WORKING? - 144 -

20.6 IN THE COURSE OF A STREAM THERE IS A WATERFALL 22 FEET HIGH. IT IS SHOWN BY MEASUREMENT THAT 450 FT^3 WATER PER SECOND POUR OVER IT. HOW MANY FT-LB OF ENERGY POUR OVER THE WATER FALL? WHAT HORSEPOWER? ..... - 144 -

20.7 HOW MANY GALLONS OF WATER (8LB/GALLON) COULD A 10 HORSEPOWER ENGINE RAISE IN ONE HOUR TO A HEIGHT OF 60 FEET? ..... - 145 -

20.8 A CERTAIN AIRPLANE USING THREE 400 HORSEPOWER ENGINES FLEW 80 MILES PER HOUR. WITH HOW MANY POUNDS OF BACKWARD FORCE DID THE PROPELLERS PUSH AGAINST THE AIR? ..... - 145 -

20.9 IF A RIFLE BULLET CAN JUST PASS THROUGH A PLANK, HOW MANY PLANKS WILL IT PASS THROUGH IF ITS SPEED IS DOUBLED? ..... - 146 -

20.10 A STEEL BALL DROPPED INTO A PAIL OF MOIST CLAY FROM A HEIGHT OF 1 METER SINKS TO A DEPTH OF 2CM. HOW FAR WILL IT SINK IF DROPPED FROM 4 METERS? ..... - 146 -

20.11 NEGLECTING FRICTION, FIND HOW MUCH FORCE A BOY WOULD HAVE TO EXERT TO PULL A 100 POUND WAGON UP AN INCLINE WHICH RISES 5FT FOR EVERY 100 FT OF LENGTH TRAVERSED ON THE INCLINE. ..... - 146 -

21. THERMOMETRY ..... - 148 -

21.1 DEFINE 0 °C AND 100 °C. WHAT IS 1 DEGREE CENTIGRADE? WHAT IS 1 DEGREE FAHRENHEIT? . - 148 -

21.2 A STUDY OF THE BEHAVIOR OF GASSES BRINGS US TO CONCLUDE THAT THERE IS A TEMPERATURE AT WHICH MOLECULES ARE AT REST AND THEREFORE PRODUCE NO HEAT. GIVE THE REASONING THAT LEADS TO THIS CONCLUSION. ..... - 148 -

21.3 NORMAL ROOM TEMPERATURE IS 68 °F. WHAT TEMPERATURE IS THIS EXPRESSED IN °C? ..... - 148 -

21.4 THE NORMAL TEMPERATURE OF THE HUMAN BODY IS 98.6 °F; WHAT IS THIS TEMPERATURE IN °C? ... - 149 -

21.5 WHAT TEMPERATURE CENTIGRADE CORRESPONDS TO ZERO °F? ..... - 149 -

21.6 MERCURY FREEZES AT ABOUT -40 °C. WHAT IS THIS TEMPERATURE EXPRESSED IN FAHRENHEIT? ... - 149 -

21.7 THE TEMPERATURE OF LIQUID AIR IS -190 °C. WHAT IS THIS TEMPERATURE EXPRESSED IN FAHRENHEIT? ..... - 149 -

21.8 THE LOWEST TEMPERATURE ATTAINABLE BY EVAPORATING LIQUID HELIUM IS -271.3 °C. WHAT IS THIS TEMPERATURE EXPRESSED IN FAHRENHEIT? ..... - 149 -

21.9 WHAT IS THE ABSOLUTE ZERO OF TEMPERATURE ON THE FAHRENHEIT SCALE? ..... - 149 -

21.10 WHY IS A FEVER THERMOMETER MADE WITH A VERY LONG CYLINDRICAL BULB INSTEAD OF A SPHERICAL BULB? ..... - 149 -

21.11 WHEN THE BULB OF A THERMOMETER IS PLACED IN HOT WATER, IT AT FIRST FALLS A LITTLE AND AFTERWARD RISES. WHY? ..... - 149 -

21.12 HOW DOES THE DISTANCE BETWEEN THE "0" MARK AND THE "100" MARK VARY WITH THE SIZE OF THE BORE, THE SIZE OF THE BULB REMAINING THE SAME? ..... - 150 -

21.13 WHAT IS MEANT BY THE ABSOLUTE ZERO OF TEMPERATURE? ..... - 150 -

21.14 WHY IS THE TEMPERATURE OF LIQUID AIR LOWERED IF IT IS PLACED IN A VACUUM? ..... - 150 -

21.15 TWO THERMOMETERS HAVE BULBS OF EQUAL SIZE. THE BORE OF ONE HAS A DIAMETER TWICE THAT OF THE OTHER. WHAT ARE THE RELATIVE LENGTHS OF THE STEMS BETWEEN 0 AND 100 °C? ..... - 150 -

22. COEFFICIENTS OF EXPANSION ..... - 151 -

22.1 TO WHAT TEMPERATURE MUST A CUBIC FOOT OF GAS INITIALLY AT 0 °C BE RAISED TO DOUBLE ITS VOLUME IF ITS PRESSURE REMAINS CONSTANT? ..... - 151 -

22.2 IF THE VOLUME OF AIR AT 30 °C IS 200 CM³, AT WHAT TEMPERATURE WILL ITS VOLUME BE WHEN IT IS 300CM³? ..... - 151 -

22.3 IF THE AIR WITHIN A BICYCLE TIRE IS UNDER A PRESSURE OF 2 ATMOSPHERES, I.E., 152 CM HG, WHEN THE TEMPERATURE IS 10 °C (283 DEGREES KELVIN), WHAT PRESSURE WILL EXIST IN THE TUBE WHEN THE TEMPERATURE CHANGES TO 35 °C (308 DEGREES KELVIN)? ..... - 152 -

22.4 IF THE PRESSURE TO WHICH 15CM³ OF AIR IS SUBJECTED CHANGES FROM 76CM HG TO 40 CM HG, THE TEMPERATURE REMAINING CONSTANT, WHAT DOES ITS VOLUME BECOME? ..... - 152 -

22.5 THE AIR WITHIN A HALF-FILLED BALLOON OCCUPIES A VOLUME OF 100,000 LITERS. THE TEMPERATURE IS 15 °C, AND THE BAROMETRIC PRESSURE IS 75CM HG. WHAT WILL BE THE VOLUME OF AIR IN THE BALLOON AFTER THE BALLOON HAS RISEN TO THE HEIGHT OF MT. BLANC, WHERE THE PRESSURE IS 37CM HG AND THE TEMPERATURE IS -10 °C? ..... - 152 -

23. APPLICATIONS OF EXPANSION ..... - 153 -

23.1 WHY IS THE WATER AT THE BOTTOM OF A LAKE USUALLY COLDER THAN AT THE TOP? ..... - 153 -

WHY IS THE WATER AT THE BOTTOM OF VERY DEEP MOUNTAIN LAKES IN SOME INSTANCES OBSERVED TO BE 4 °C THE WHOLE YEAR ROUND, WHILE THAT AT THE TOP VARIES FROM ZERO °C TO QUITE WARM? - 153 -

23.2 GIVE THREE REASONS WHY MERCURY IS A BETTER LIQUID TO USE IN THERMOMETERS THAN WATER... - 154 -

23.3 WHY IS A THICK GLASS MORE LIKELY TO BREAK WHEN HOT WATER IS POURED INTO IT THAN A THIN GLASS? ..... - 154 -

23.4 PENDULUMS CAN BE COMPENSATED FOR THERMAL EXPANSION USING CYLINDERS OF MERCURY. EXPLAIN HOW THIS CAN HAPPEN. ..... - 154 -

23.5 THE STEEL CABLE FROM WHICH THE BROOKLYN BRIDGE HANGS IS MORE THAN A MILE (5,280 FEET) LONG. BY HOW MANY FEET DOES A MILE OF ITS LENGTH VARY BETWEEN A WINTER DAY WHEN THE TEMPERATURE IS MINUS 20 °C AND A SUMMER DAY WHEN THE TEMPERATURE IS PLUS 30 °C? ..... - 154 -

23.6 IF A SURVEYOR'S STEEL TAPE IS EXACTLY 50 METERS LONG AT 20 °C, HOW MUCH TOO SHORT WOULD IT BE AT ZERO °C? ..... - 154 -

23.7 A CERTAIN GLASS FLASK IS GRADUATED TO HOLD 1000CM³ AT 15 °C. HOW MANY CM³ OF WATER WILL THE FLASK HOLD AT 40 °C IF THE CUBIC COEFFICIENT OF EXPANSION OF THE GLASS IS 0.000025? ... - 155 -

23.8 A DIAL THERMOMETER IS MADE USING A TWO METAL STRIP WITH IRON ON THE OUTSIDE AND BRASS ON THE INSIDE. EXPLAIN HOW IT WORKS. ..... - 155 -

23.9 WHY CAN A GLASS STOPPER SOMETIMES BE LOOSENED BY POURING HOT WATER OVER THE NECK OF THE BOTTLE IT IS STUCK IN? ..... - 155 -

23.10 A METAL ROD 230CM LONG EXPANDED 2.75MM WHEN HEATED FROM 0 °C TO 100 °C. FIND ITS COEFFICIENT OF LINEAR EXPANSION. ..... - 156 -

23.11 THE CHANGES IN TEMPERATURE TO WHICH LONG LINES OF STEAM PIPES ARE SUBJECTED MAKE IT NECESSARY TO INSTALL "EXPANSION JOINTS" BETWEEN THEM. THESE JOINTS CONSIST OF BRASS COLLARS FITTED TIGHTLY WITH PACKING OVER THE SEPARATED ENDS OF TWO LENGTHS OF PIPE. IF THE PIPE IS MADE OF IRON AND SUCH A JOINT IS INSERTED EVERY 200 FEET, AND IF THE TEMPERATURE RANGE IN WHICH THE PIPES MUST FUNCTION IS FROM -30 °C TO 125 °C, WHAT IS THE MINIMUM "PLAY" THAT MUST BE ALLOWED AT EACH EXPANSION JOINT? ..... - 156 -

23.12 SHOW THAT THE EQUATION FOR THE LINEAR COEFFICIENT OF EXPANSION CAN BE DEFINED AS THE INCREASE IN LENGTH PER UNIT LENGTH PER DEGREE. ..... - 157 -

24. FRICTION ..... - 158 -

24.1 MENTION THREE WAYS OF LESSENING FRICTION IN MACHINERY. ..... - 158 -

24.2 HOW IS FRICTION AN ADVANTAGE, AND HOW A DISADVANTAGE IN EVERYDAY LIFE? ..... - 158 -

COULD WE GET ALONG WITHOUT FRICTION? ..... - 158 -

24.3 WHY IS A STREAM SWIFTER AT THE CENTER THAN AT THE BANKS? ..... - 158 -

24.4 WHY DOES A TEAM OF HORSES HAVE TO KEEP PULLING AFTER A LOAD IS STARTED? ..... - 158 -

24.5 WHY IS SAND OFTEN PLACED ON A TRAIN TRACK TO START A HEAVY TRAIN? ..... - 159 -

24.6 IN WHAT WAY IS FRICTION AN ADVANTAGE IN LIFTING BUILDINGS WITH A JACKSCREW? ..... - 159 -

24.7 A SMOOTH BLOCK IS 10 X 8 X 3 CM. COMPARE THE DISTANCES IT WILL SLIDE WHEN GIVEN A CERTAIN INITIAL VELOCITY ON SMOOTH ICE IF RESTING FIRST ON A 10 X 8 FACE; SECOND ON A 10 X 3 FACE; THIRD ON AN 8 X 3 FACE. ..... - 159 -

24.8 WHAT IS THE COEFFICIENT OF FRICTION OF BRASS ON BRASS IF A FORCE OF 25LB IS REQUIRED TO MAINTAIN UNIFORM MOTION OF A BRASS BLOCK WEIGHING 200LB? ..... - 159 -

24.9 THE COEFFICIENT OF FRICTION BETWEEN A BLOCK AND A TABLE IS 0.3. WHAT FORCE WILL BE REQUIRED TO KEEP A 500GM BLOCK IN UNIFORM MOTION? ..... - 159 -

25. EFFICIENCY ..... - 160 -

25.1 WHY IS THE EFFICIENCY OF THE JACKSCREW LOW AND THAT OF THE LEVER HIGH? ..... - 160 -

25.2 FIND THE EFFICIENCY OF A MACHINE IN WHICH AN EFFORT OF 12LB MOVING 5FT RAISES A WEIGHT OF 25LB 2FT. ..... - 160 -

25.3 WHAT AMOUNT OF WORK WAS DONE ON A BLOCK AND TACKLE HAVING AN EFFICIENCY OF 60% (3/5) WHEN BY MEANS OF IT A WEIGHT OF 750LB WAS RAISED 50FT? ..... - 160 -

25.4 A FORCE PUMP DRIVEN BY A 1 HORSEPOWER ENGINE LIFTED 4FT³ OF WATER IN ONE MINUTE TO A HEIGHT OF 100FT. WHAT WAS THE EFFICIENCY OF THE PUMP? ..... - 160 -

25.5 IF IT IS NECESSARY TO PULL ON A BLOCK AND TACKLE WITH A FORCE OF 100LB TO LIFT A WEIGHT OF 300LB, AND IF THE FORCE MUST MOVE 6FT TO RAISE THE WEIGHT 1 FT, WHAT IS THE EFFICIENCY OF THE SYSTEM? ..... - 160 -

25.6 IF THE EFFICIENCY HAD BEEN 65% IN PROBLEM 25.5, WHAT FORCE WOULD HAVE BEEN REQUIRED TO LIFT THE WEIGHT? ..... - 160 -

25.7 THE NIAGARA TURBINE PITS ARE 136FT DEEP, AND THEIR AVERAGE HORSEPOWER IS 5000. THE TURBINES ARE 85% EFFICIENT. HOW MUCH WATER DOES EACH TURBINE DISCHARGE PER MINUTE? . - 161 -

26. MECHANICAL EQUIVALENT OF HEAT ..... - 162 -

26.1 SHOW THAT THE ENERGY OF A WATERFALL IS MERELY TRANSFORMED SOLAR ENERGY ..... - 162 -

26.2 ANALYZE THE TRANSFORMATIONS OF ENERGY WHICH OCCUR WHEN A BULLET IS FIRED VERTICALLY UPWARD. ..... - 162 -

26.3 METEORITES ARE SMALL COLD BODIES MOVING ABOUT IN SPACE. WHY DO THEY BECOME LUMINOUS WHEN THEY ENTER THE EARTH'S ATMOSPHERE? ..... - 162 -

26.4 THE NIAGARA FALLS ARE 160 FEET (49 METERS) HIGH. HOW MUCH WARMER IS THE WATER AT THE BOTTOM THAN AT THE TOP OF THE FALLS? ..... - 163 -

26.5 HOW MANY BTU OF HEAT ARE REQUIRED TO WARM 10LB OF WATER FROM FREEZING TO BOILING? ... - 163 -

26.6 TWO AND A HALF GALLONS OF WATER (20LB) WERE WARMED FROM 68 °F TO 212 °F (A TEMPERATURE DIFFERENCE OF 144 °F). IF THE HEAT ENERGY PUT INTO THE WATER COULD ALL HAVE BEEN MADE TO DO USEFUL WORK, HOW HIGH COULD 10 TONS OF COAL HAVE BEEN RAISED? ..... - 164 -

27. SPECIFIC HEAT ..... - 165 -

27.1 A BARRELFUL OF TEPID WATER WHEN POURED INTO A SNOWDRIFT MELTS MUCH MORE SNOW THAN A CUPFUL OF BOILING WATER. WHICH HAS THE GREATER QUANTITY OF HEAT STORED IN IT? ..... - 165 -

27.2 WHY IS A LITER OF HOT WATER A BETTER FOOT WARMER THAN AN EQUAL VOLUME OF ANY OTHER SUBSTANCE? ..... - 165 -

27.3 THE SPECIFIC HEAT OF WATER IS MUCH GREATER THAN THAT OF ANY OTHER LIQUID OR OF ANY SOLID. EXPLAIN HOW THIS ACCOUNTS FOR THE FACT THAT AN ISLAND IN MID-OCEAN UNDERGOES LESS EXTREMES OF TEMPERATURE THAN AN INLAND REGION. ..... - 165 -

27.4 HOW MANY CALORIES ARE REQUIRED TO HEAT A LAUNDRY IRON WEIGHING 3 KILOGRAMS FROM 20 °C TO 130 °C? ..... - 165 -

27.5 HOW MANY BTU ARE REQUIRED TO WARM A 6 POUND LAUNDRY IRON FROM 75 °F TO 250 °F? . - 166 -

27.6 IF 100 GRAMS OF MERCURY AT 95 °C ARE MIXED WITH 100 GRAMS OF WATER AT 15 °C, AND IF THE RESULTING TEMPERATURE IS 17.6 °C, WHAT IS THE SPECIFIC HEAT OF MERCURY? ..... - 166 -

27.7 IF 200 GRAMS OF WATER AT 80 °C ARE MIXED WITH 100 GRAMS OF WATER AT 10 °C WHAT WILL BE THE TEMPERATURE OF THE MIXTURE? ..... - 166 -

27.8 WHAT TEMPERATURE WILL RESULT IF 400 GRAMS OF ALUMINUM AT 100 °C ARE PLACED IN 500 GRAMS OF WATER AT 20 °C? ..... - 167 -

27.9 EIGHT POUNDS OF WATER WERE PLACED IN A COPPER KETTLE WEIGHING 2.5 POUNDS. HOW MANY BTU ARE REQUIRED TO HEAT THE WATER AND THE KETTLE FROM 70 °F TO 212 °F? ..... - 168 -

27.10 IF A SOLID STEEL PROJECTILE WERE SHOT WITH A VELOCITY OF 1000 METERS PER SECOND AGAINST AN IMPENETRABLE STEEL TARGET, AND ALL THE HEAT GENERATED WERE TO RAISE THE TEMPERATURE OF

THE PROJECTILE, WHAT WOULD BE THE AMOUNT OF THE INCREASE IN TEMPERATURE OF THE PROJECTILE? - 168 -

28. FUSION ..... - 169 -

28.1 WHAT IS THE MEANING OF THE STATEMENT: ..... - 169 -

"THE HEAT OF FUSION OF MERCURY IS 2.8"? ..... - 169 -

28.2 EXPLAIN HOW A BLOCK OF ICE PLACED IN THE TOP OF A CONTAINER CAN KEEP THE CONTENTS OF THE CONTAINER COOL ..... - 169 -

28.3 HOW MANY TIMES AS MUCH HEAT (CALORIES) IS REQUIRED TO MELT ANY PIECE OF ICE AS TO WARM THE RESULTING WATER 1 DEGREE CENTIGRADE? ..... - 169 -

28.4 IF THE HEAT OF FUSION OF ICE WERE TO BE ONLY 40 INSTEAD OF 80, HOW WOULD THIS AFFECT THE AMOUNT OF ICE REQUIRED TO COOL SOMETHING? ..... - 170 -

28.5 FIVE POUNDS OF ICE MELTED IN AN ICE CHEST IN ONE HOUR. HOW MANY BTUS OF HEAT WENT THROUGH THE WALLS OF THE ICE CHEST? ..... - 170 -

28.6 WHAT WILL HAPPEN IF 1000 CALORIES ARE APPLIED TO 20 GRAMS OF ICE AT ZERO °C? ..... - 170 -

28.7 HOW MANY GRAMS OF ICE MUST BE PUT INTO 200 GRAMS OF WATER AT 40 °C TO LOWER THE TEMPERATURE TO10 °C? ..... - 170 -

28.8 HOW MANY GRAMS OF ICE MUST BE PUT INTO 500 GRAMS OF WATER AT 50 °C TO LOWER THE TEMPERATURE TO 10 °C? ..... - 171 -

28.9 WHY CAN SNOW BE PACKED INTO A SNOWBALL IF THE SNOW IS MELTING, BUT NOT IF ITS TEMPERATURE IS MUCH BELOW ZERO °C? ..... - 171 -

29. EVAPORATION ..... - 172 -

29.1 EXPLAIN THE EVAPORATION OF NAPHTHALENE MOTH BALLS AT ORDINARY ROOM TEMPERATURES..... - 172 -

29.2 WHY DO CLOTHES HUNG IN THE OPEN TO DRY BECOME DRY FASTER ON A WINDY DAY THAN ON A STILL DAY? ..... - 172 -

29.3 IF THE INSIDE OF A BAROMETER TUBE IS WET WHEN IT IS FILLED WITH MERCURY, WILL THE HEIGHT OF THE MERCURY BE THE SAME AS IN A DRY TUBE? ..... - 172 -

29.4 HOW MANY GRAMS OF WATER WILL EVAPORATE AT 20°C INTO A CLOSED ROOM 18 X 20 X 4 METERS IN SIZE? ..... - 172 -

29.5 WHEN THE TEMPERATURE IS 15°C, WHAT WILL BE THE ERROR IN THE BAROMETRIC HEIGHT INDICATED BY A BAROMETER WHICH CONTAINS MOISTURE? ..... - 172 -

29.6 WHEN THE TEMPERATURE IS 20°C, HOW GREAT WAS THE ERROR IN READING DUE TO THE PRESENCE OF WATER VAPOR IN OTTO VON GUERICKE'S BAROMETER? ..... - 173 -

30. HYGROMETRY – MOISTURE CONDITIONS IN THE ATMOSPHERE ..... - 174 -

30.1 WHY DO READING GLASSES BECOME COATED WITH MOISTURE WHEN ENTERING A WARM HOUSE FROM OUTSIDE ON A COLD WINTER DAY? ..... - 174 -

30.2 DOES DEW "FALL"? ..... - 174 -

30.3 WHY ARE ICEBERGS FREQUENTLY SURROUNDED BY FOG? ..... - 174 -

30.4 EXPLAIN WHY CONDENSED WATER WILL NOT USUALLY COLLECT ON A PITCHER OF ICE WATER IN A WARM ROOM ON A COLD WINTER DAY..... - 175 -

30.5 THE DEW POINT IN A ROOM WAS FOUND TO BE 8°C. WHAT WOULD THE RELATIVE HUMIDITY OF THE AIR IN THE ROOM BE AT 10°C, AT 20°C, AT 30°C? ..... - 175 -

30.6 WHAT WEIGHT OF WATER IS CONTAINED IN A ROOM 5 X 5 X 3 METERS IF THE RELATIVE HUMIDITY IS 60% AND THE TEMPERATURE IS 20°C?..... - 176 -

30.7 IF A GLASS BEAKER AND A POROUS EARTHENWARE VESSEL ARE FILLED WITH EQUAL AMOUNTS OF WATER AT THE SAME TEMPERATURE, IN THE COURSE OF A FEW MINUTES A NOTICEABLE DIFFERENCE OF TEMPERATURE WILL EXIST BETWEEN THE TWO VESSELS. WHICH WILL BE THE COOLER, AND WHY?... - 176 -

30.8 WHY WILL AN OPEN, NARROW-NECKED BOTTLE CONTAINING ETHER NOT SHOW AS LOW A TEMPERATURE AS AN OPEN SHALLOW DISH CONTAINING AN EQUAL AMOUNT OF ETHER?..... - 176 -

30.9 WHY IS THE HEAT SO OPPRESSIVE ON A VERY DAMP DAY IN SUMMER? ..... - 177 -

30.10 A MORNING FOG GENERALLY DISAPPEARS BEFORE NOON. EXPLAIN THE REASON FOR ITS DISAPPEARANCE..... - 177 -

30.11 WHAT BECOMES OF THE CLOUD WHICH CAN BE SEEN WHEN A STEAM WHISTLE IS OPERATED? IS IT STEAM?..... - 177 -

30.12 EXPLAIN WHY IT IS NECESSARY IN WINTER TO ADD MOISTURE TO THE AIR IN OUR HOUSES TO MAINTAIN PROPER RELATIVE HUMIDITY, BUT NOT NECESSARILY IN SUMMER?..... - 178 -

30.13 WHAT FACTORS EFFECTING EVAPORATION ARE ILLUSTRATED BY THE FOLLOWING? A) A WET HANDKERCHIEF DRIES FASTER IF IT IS SPREAD OUT. B) CLOTHES DRY BEST ON A WINDY DAY. C) CLOTHES DO NOT DRY QUICKLY ON A COLD DAY. D) CLOTHES DRY SLOWLY ON HUMID DAYS..... - 178 -

31. BOILING ..... - 179 -

31.1 A FALL OF 1°C IN THE BOILING POINT OF WATER IS CAUSED BY RISING 960 FEET. HOW HOT IS BOILING WATER AT DENVER, COLORADO, 5000 FT ABOVE SEA LEVEL? ..... - 179 -

31.2 HOW CAN WE OBTAIN PURE DRINKING WATER FROM SEA WATER? ..... - 179 -

31.3 WHEN WATER HAS BEEN BROUGHT TO A BOIL, WILL EGGS IN IT BECOME HARDER FASTER IF THE HEAT UNDER THE WATER IS INCREASED? ..... - 180 -

31.4 THE HOT WATER THAT LEAVES A STEAM RADIATOR CAN BE AS HOT AS THE STEAM THAT ENTERED THE RADIATOR. HOW, THEN, HAS THE ROOM BEEN WARMED?..... - 180 -

31.5 IN A VESSEL OF WATER WHICH IS BEING HEATED, FINE BUBBLES RISE TO THE SURFACE OF THE WATER LONG BEFORE THE WATER BEGINS TO BOIL. WHY IS THIS SO?..... - 180 -

31.6 WHEN WATER IS BOILED IN A DEEP VESSEL, THE RISING AIR BUBBLES INCREASE RAPIDLY IN SIZE AS THEY APPROACH THE SURFACE. GIVE TWO REASONS FOR THIS. ..... - 180 -

31.7 WHY ARE BURNS CAUSED BY STEAM SO MUCH MORE SEVERE THAN BURNS CAUSED BY HOT WATER OF THE SAME TEMPERATURE? ..... - 180 -

31.8 HOW MANY TIMES AS MUCH HEAT IS REQUIRED TO CONVERT ANY BODY OF BOILING WATER INTO STEAM AS TO WARM AN EQUAL WEIGHT OF WATER 1°C?..... - 181 -

31.9 HOW MANY BTU ARE LIBERATED IN A RADIATOR WHEN 10LB OF STEAM CONDENSE THERE?..... - 181 -

31.10 IN A CERTAIN RADIATOR 2KG OF STEAM AT 100°C CONDENSED TO WATER IN ONE HOUR AND THE WATER LEFT THE RADIATOR AT 90°C. HOW MANY CALORIES HEATED THE ROOM THE RADIATOR WAS IN DURING THE HOUR? ..... - 181 -

31.11 How many calories are given up by 30gm of steam at 100°C in condensing and then cooling to 20°C? ..... - 181 -

32. ARTIFICIAL COOLING ..... - 183 -

32.1 When salt water freezes, the ice formed is free from salt. What effect, then, does freezing have on the concentration of a salt solution? ..... - 183 -

32.2 A partially concentrated salt solution which has a freezing point of -5°C is placed in a room which is kept at -10°C. Will it freeze? ..... - 183 -

32.3 Explain why salt is thrown on icy sidewalks on cold winter days. ..... - 183 -

32.4 Give two reasons why the oceans freeze less easily than the lakes. ..... - 184 -

32.5 Why does A) pouring H_2SO_4 into water produce heat, while B) pouring H_2SO_4 over ice produce cold? ..... - 184 -

32.6 Why will a liquid that is unable to dissolve a solid at a low temperature often do so at a higher temperature? ..... - 184 -

32.7 When the salt in an ice cream freezer unites with the ice to form brine, about how many calories of heat are used for each gram of ice melted? ..... - 184 -

33. INDUSTRIAL APPLICATIONS ..... - 186 -

33.1 Why is a gas engine called an internal-combustion engine? ..... - 186 -

33.2 Why do gasoline engines have flywheels? ..... - 186 -

33.3 How does the temperature of the steam within a locomotive boiler compare with its temperature at the moment of exhaust? ..... - 186 -

33.4 On the drive wheels of a steam locomotive there is a mass of iron opposite the point of attachment of the drive shaft. Why is this necessary? ..... - 186 -

33.5 Why does the water in a closed water boiler not boil, although it is at 100°C? ..... - 187 -

33.6 If liquid oxygen is placed in an open vessel, its temperature will not rise above minus 182°C. Why not? ..... - 187 -

33.7 How many foot pounds of energy are in 1 pound of coal containing 14,000 BTU per pound? ..... - 188 -

33.8 The average steam locomotive has an efficiency of only 6%. What horsepower does it develop when it is consuming 1 ton of coal per hour? ..... - 188 -

33.9 What amount of useful work did a gasoline engine working at an efficiency of 25% do in using 100lb of gasoline containing 18,000 BTU per pound? ..... - 188 -

33.10 What pull (force) does a 1000 horsepower locomotive exert when it is running at 25 miles per hour and exerting its full horsepower? ..... - 188 -

34. CONDUCTION OF HEAT ..... - 190 -

34.1Why do firemen wear flannel shirts in summer to keep cool and in winter to keep warm? - 190 -

34.2 If a package of ice cream is put inside a paper bag, it will not melt as fast as without the bag on a hot summer day. Explain why. ..... - 190 -

34.3 If the ice in an ice chest is wrapped in a blanket, what is the effect on the ice? ..... - 190 -

34.4 If a piece of paper is wrapped tightly around a metal rod and held for an instant in a flame, it will not be scorched. If it is wrapped around a wooden rod, it will be scorched immediately. Why. ..... - 190 -

34.5 If one touches a pan containing a loaf of bread in a hot oven, he receives a much more severe burn than if he touches the bread itself, although the temperature is the same. Explain. ..... - 190 -

34.6 Why is it a good idea to cover plants on a night that frost is expected? ..... - 190 -

34.7 Why will a moistened finger or the tongue freeze instantly to a piece of iron on a cold winter day, but not to a piece of wood? ..... - 191 -

34.8 Does clothing ever afford us heat in winter? ..... - 191 -

34.9 Why is the outer pail of an ice cream freezer made of thick wood, and the inner can of thin metal? ..... - 191 -

35. VENTILATION, CONVECTION, RADIATION, AND HEATING . - 192 -

35.1 If we attempt to start a fire in a wood burning stove when the chimney is cold and damp, the stove "smokes". Explain this. ..... - 192 -

35.2 Why is a hollow wall that has been filled with sawdust a better non-conductor of heat than the same wall filled with only air? ..... - 192 -

35.3 In a hot water heating system why does the return pipe always connect at the bottom of the boiler, while the outside going pipe connects at the top? ..... - 192 -

35.4 Which is thermally more efficient, a cooking stove or a grill? ..... - 192 -

35.5 When a room is heated by a fireplace, which of the three methods of heat transfer plays the most important role? ..... - 192 -

35.6 Why do you blow on your hands to warm them in winter, and fan yourself to cool-off in summer? ..... - 193 -

35.7 If you open a door between a warm and a cold room, in what direction will a candle flame be blown which is placed at the top of the door? ..... - 193 -

35.8 Why is "felt" a better conductor of heat when it is very firmly packed than when it is loosely packed? ..... - 193 -

35.9 If 2 metric tons of coal are burned in your house per month, and if your furnace allows one-third of the heat to go up the chimney, how many calories remain to be used per day? .... - 193 -

36. MAGNETISM ..... - 194 -

36.1 Make a diagram to show the general shape of the lines of force between unlike poles of bar magnets, and between like poles of bar magnets. ..... - 194 -

36.2 Devise an experiment which will show that a piece of iron attracts a magnet just as truly as the magnet attracts the iron. ..... - 194 -

36.3 To test a needle with a magnet to determine whether the needle is magnetized, why must you observe "repulsion" before you can be sure it is magnetized? ..... - 195 -

36.4 A nail lies with its head near the N pole of a bar magnet. Diagram the nail and magnet, and draw from the N pole through the nail a closed curve to represent one line of magnetic force. ..... - 195 -

36.5 Explain, on the basis of induced magnetization, the process by which a magnet attracts a piece of soft iron. ..... - 195 -

36.6 Do the facts of magnetic induction suggest to you any reason why a horseshoe magnet retains its magnetism better when a bar of soft iron (called a keeper, or armature) is placed across its poles than when it is not so treated? ..... - 196 -

36.7 Why should the needle in a "needle-dip" experiment be placed east to west when adjusting for neutral equilibrium before it is magnetized? ..... - 196 -

36.8 How would an ordinary compass needle act if placed over one of the earth's magnetic poles? ..... - 196 -

36.9 Why are the tops of steam radiators South Magnetic Poles, as proved by the constant repulsion of the south end of a compass needle? ..... - 196 -

36.10 Give two proofs that the earth is a magnet. ..... - 197 -

36.11 A magnetic pole that has a strength of 80 units is 20 cm distant from a similar pole having a strength of 30 units. Find the force between them. ..... - 197 -

37. STATIC ELECTRICITY ..... - 198 -

37.1 If a light ball made of a material that can carry an electrical charge is placed between two plates, one of which is connected to the earth and the other is connected to a high electrostatic charge (either + or -), the ball will bounce back and forth between the two plates. Explain why this happens. ..... - 199 -

37.2 Given a gold-leaf electroscope, a glass rod and a piece of silk, how, in general, would you proceed to test the sign of the electrification of an unknown charge? ..... - 200 -

37.3 Charge a gold-leaf electroscope using a glass rod (it is now positively charged). Warm a piece of paper and stroke it on your clothing. Hold it over the charged electroscope. If the leaves move away from each other, is the charge on the paper + or -? . - 200 -

37.4 If you are given a positive charged insulated sphere, how could you charge two other spheres, one positive and the other negative, *without weakening the charge on the first sphere?* ..... - 201 -

37.5 If you bring a positive-charged glass rod near the ball of an electroscope and then touch the ball with your finger, why do you not remove the negative electricity which is on the ball? ..... - 201 -

37.6 When charging an electroscope by induction, why must the finger be moved away from the ball of the electroscope *before* the charged body is removed from its position near the ball? ..... - 202 -

37.7 If you hold a brass rod in your hand and rub it with silk, the rod will show no effect of being charged; but if you hold the rod with a piece of sheet rubber and then rub it with silk, you will find it to be charged. Explain why this happens. ..... - 202 -

37.8 State as many differences as you can between the phenomena of magnetism and those of electricity ..... - 202 -

37.9 If a charged rod is brought near a ball suspended by a silk string, the ball is first attracted to the rod and then repelled from it. Explain why. ..... - 202 -

38. DISTRIBUTION OF CHARGE, POTENTIAL, AND CAPACITY - 204 -

38.1 IF YOU SET A *CHARGED* LEYDEN JAR ON A CAKE OF PARAFFIN, WHY CAN YOU NOT DISCHARGE IT BY TOUCHING ONE OF THE COATINGS? ..... - 204 -

38.2 WILL A SOLID SPHERE HOLD A LARGER CHARGE OF ELECTRICITY THAN A HOLLOW ONE OF THE SAME DIAMETER? ..... - 204 -

38.3 WHY CAN A LEYDEN JAR NOT BE APPRECIABLY CHARGED IF THE OUTER COAT IS INSULATED? .. - 205 -

38.4 USING A STICK OF SEALING WAX AND A PIECE OF FLANNEL, IN WHAT TWO WAYS COULD YOU GIVE A POSITIVE CHARGE TO AN INSULATED BODY? ..... - 205 -

38.5 EXPLAIN, USING A SET OF DRAWINGS, THE CHARGING OF THE COVER OF AN ELECTROPHORUS. . - 205 -

38.6 REPRESENT BY DRAWING THE ELECTRICAL CONDITION OF A TOWER JUST BEFORE IT IS STRUCK BY LIGHTNING, ASSUMING THE CLOUD AT THIS PARTICULAR TIME TO BE POWERFULLY CHARGED WITH + ELECTRICITY ..... - 206 -

38.7 WHEN A NEGATIVELY CHARGED CLOUD PASSES OVER A HOUSE THAT HAS A LIGHTNING ROD, THE LIGHTNING ROD NEUTRALIZES THE CLOUD. HOW? ..... - 207 -

39. ELECTRICITY IN MOTION ..... - 210 -

39.1 UNDER WHAT CONDITIONS WILL AN ELECTRIC CHARGE PRODUCE A MAGNETIC EFFECT? ..... - 210 -

39.2 HOW CAN YOU TEST WHETHER CURRENT IS MOVING IN A WIRE? ..... - 210 -

39.3 HOW DOES THE CURRENT DELIVERED BY A CELL DIFFER FROM THAT DELIVERED BY A STATIC MACHINE? ..... - 210 -

39.4 MENTION THREE RESPECTS IN WHICH THE BEHAVIOR OF MAGNETS IS SIMILAR TO THE BEHAVIOR OF ELECTRIC CHARGES. ..... - 210 -

40. ELECTROLYSIS ..... - 211 -

40.1 WHAT WAS THE STRENGTH OF A CURRENT THAT DEPOSITED 11.84 GRAMS OF COPPER IN 30 MINUTES? ..... - 211 -

40.2 HOW LONG WILL IT TAKE 1 AMPERE TO DEPOSIT 1GRAM OF SILVER FROM A SOLUTION OF $AgNO_3$? ... - 211 -

40.3 IF 1 AMPERE IS PASSED THROUGH A SOLUTION CONTAINING A ZINC SALT, HOW MUCH ZINC WOULD BE DEPOSITED IN ¼ HOUR? ..... - 211 -

40.4 HOW COULD A SILVER CUP BE GIVEN A GOLD LINING BY USE OF AN ELECTRIC CURRENT? ..... - 211 -

40.5 IF THE TERMINALS OF A BATTERY ARE IMMERSED IN A GLASS OF ACIDULATED WATER, HOW CAN YOU TELL FROM THE *RATE OF EVOLUTION* OF THE GASSES AT THE TWO ELECTRODES WHICH BATTERY POLE IS POSITIVE AND WHICH IS NEGATIVE? ..... - 212 -

40.6 THE COULOMB IS 3 BILLION (3×10^9) TIMES AS LARGE AS THE *ELECTROSTATIC* UNIT OF ELECTRICITY. HOW MANY ELECTRONS PASS EACH SECOND BY A LOCATION ON A LAMP FILAMENT WHICH IS CARRYING 1 AMPERE OF CURRENT? ..... - 212 -

41. MAGNETIC EFFECTS OF CURRENT, PROPERTIES OF COILS.....- 213 -

41.1 DESCRIBE THE MAGNETIC CONDITION OF THE SPACE ABOUT A TROLLEY CAR WIRE THAT IS CARRYING A DIRECT CURRENT. ..... - 213 -

41.2 In what direction will the north pole of a magnetic needle be deflected if it is held *above* a wire in which electrons are flowing from south to north? ..... - 213 -

41.3 A man stands *beneath* a north and south trolley line and finds that a magnetic needle in his hand has its north end deflected toward the east. What is the direction of electron flow in the wire? ..... - 214 -

41.4 A loop of wire lying on the table carries a current in which electrons flow in a counter-clockwise direction. Would a north pole at the center of the loop point up or down? ..... - 214 -

41.5 If you look down on the ends of a U-shaped electromagnet, does the current encircle the two coils in the same or in opposite directions? ..... - 215 -

42. MEASUREMENT OF ELECTRICAL CURRENTS ..... - 216 -

42.1 What is the principle involved in the *chemical method* of measuring the strength of an electric current? ..... - 216 -

42.2 How could you test whether the strength of an electric current is the same in all parts of a circuit? ..... - 217 -

42.3 Explain the principle of the suspended-coil (D'Arsonal) type of galvanometer. ..... - 217 -

42.4 When calibrating an ammeter, the current which produces a certain deflection is found to deposit ½ gram of silver in 50 minutes. What is the strength of the current? ..... - 219 -

42.5 When a compass needle is placed at the middle of a coil of wire that lies in a north-south plane, the deflection produced in the needle by a current sent through the coil is approximately proportional to the strength of the current, provided the deflection is small – not more than 20 or 25 degrees; but when the deflection becomes large, - say 60 or 70 degrees, it increases very much more slowly than does the current which produces the deflection. Can you see any reason why this should be so? ..... - 220 -

42.6 How would you build an electric bell? ..... - 220 -

43. RESISTANCE AND ELECTROMOTIVE FORCE ..... - 222 -

43.1 How can you prove that the E.M.F of a cell (voltage of the cell) does not depend on the size or nearness of the plates? ..... - 222 -

43.2 How can you prove that the internal resistance of a cell becomes smaller when the plates are made larger or placed closer together? ..... - 223 -

43.3 If the potential difference (voltage) between the terminals of a cell on open circuit is to be measured by means of a galvanometer, why must the galvanometer have a high resistance? ..... - 224 -

43.4 Why are steel wires used together with copper wires on overhead telephone lines? ..... - 224 -

43.5 A voltmeter which has a resistance of 2000 ohms is shunted across the terminals A and B of a wire which has a resistance of 1 ohm. What fraction of the total current flowing from A to B will be carried by the voltmeter? ..... - 225 -

43.6 In a given circuit, the voltage across the terminals of a resistance of 19 ohms is found to be 3 volts. What is the voltage drop across the terminals of a 3 ohm wire in the same circuit? ..... - 225 -

43.7 The resistance of a certain piece of German-silver wire is 1 ohm. What will be the resistance of another piece of the same length, but of twice the diameter? ..... - 225 -

43.8 How much current will flow between two points whose voltage drop is 2 volts, if they are connected by a wire having a resistance of 12 ohms? ..... - 225 -

43.9 What voltage exists between the ends of a wire whose resistance is 100 ohms when the wire is carrying a current of 0.3 ampere? ..... - 225 -

43.10 If a voltmeter attached across the terminals of an incandescent lamp shows a voltage of 110 volts, while an ammeter connected in series with the lamp indicates a current of ½ ampere, what is the resistance of the incandescent filament? ..... - 226 -

43.11 A certain storage cell having an E.M.F. of 2 volts is found to furnish a current of 20 amperes through an ammeter whose resistance is 0.05 ohms. Find the internal resistance of the cell. ..... - 226 -

43.12 The E.M.F. of a certain battery is 10 volts and the strength of the current obtained through an external resistance of 4 ohms is 1.25 amperes. What is the internal resistance of the battery? ..... - 226 -

43.13 Consider the diameter of No. 20 wire to be three times that of No. 30 wire. A certain No. 30 wire 1 meter long has a resistance of 6 ohms. What would be the resistance of 4 meters of No. 20 wire made of the same metal? ..... - 226 -

43.14 Three wires, each having a resistance of 15 ohms, were joined in parallel and a current of 3 amperes sent through them. How much was the E.M.F. of the current? ..... - 226 -

44. PRIMARY CELLS ..... - 228 -

44.1 A certain dry cell having an E.M.F. of 1.5 volts delivered a current of 30 amperes through an ammeter having a negligible resistance. Find the internal resistance of the cell. ..... - 228 -

44.2 Why is a Lecanche´ cell better than a Daniel cell for small current applications? - 228 -

44.3 Diagram three wires in series and three cells in series. If each wire has a resistance of 0.1 ohm, what is the internal resistance of the series? ..... - 228 -

44.4 Diagram three wires in parallel and three cells in parallel. If each wire has a 6 ohm resistance, what is the resistance of the three? ..... - 229 -

44.5 Give a water analogy of cells in series. ..... - 230 -

44.6 If the internal resistance of a Daniel cell of the gravity type is 4 ohms, and its E.M.F. is 1.08 volts, how much current will 40 cells in series send through a wire having a resistance of 500 ohms? ..... - 230 -

44.7 What current will the 40 cells in parallel send through an ammeter having a resistance of 0.1 ohm? ..... - 231 -

44.8 Under what conditions will a small cell give practically the same current as a large one of the same type? ..... - 231 -

44.9 How many cells, each of E.M.F. 1.5 volts and internal resistance of 0.2 ohm will be needed to send a current of at least one ampere through an external resistance of 40 ohms? ..... - 231 -

44.10 Why is it desirable that a galvanometer which is to be used for measuring currents have as low a resistance as possible? ..... - 232 -

44.11 A certain No.9 wire has a resistance of 20 ohms to the mile. What current will 100 Daniel cells in series, each of E.M.F. 1 volt, send through 100 miles of such wire, if two

RELAYS ARE IN THE WIRE AT DIFFERENT LOCATIONS, EACH HAVING A RESISTANCE OF 150 OHMS, AND EACH DANIEL CELL HAS AN INTERNAL RESISTANCE OF 4 OHMS? ..... - 232 -

44.12 IF THE RELAYS DESCRIBED IN PROBLEM 43.11 HAD EACH 10,000 TURNS OF WIRE IN THEIR COILS, HOW MANY AMPERE-TURNS WERE EFFECTIVE IN MAGNETIZING THEIR ELECTROMAGNETS?..... - 232 -

44.13 IF, IN PROBLEM 44.11 THE RELAYS HAD A RESISTANCE OF 3 OHMS EACH AND 500 TURNS OF WIRE, HOW MANY AMPERE-TURNS WOULD BE EFFECTIVE IN MAGNETIZING THEIR CORES? ..... - 232 -

45. SECONDARY CELLS ..... - 234 -

45.1 WHEN CHARGING A STORAGE BATTERY IS IT BETTER TO SAY THAT THE CURRENT PASSES *INTO* THE CELL OR *THROUGH* IT? ..... - 236 -

45.2 WHAT IS THE RELATION OF THE CHARGING CURRENT TO THE POSITIVE PLATE OF THE BATTERY? . - 238 -

46. HEATING EFFECTS ..... - 239 -

46.1 WHAT IS MEANT BY A 100 VOLT LAMP? ..... - 239 -

46.2 A VERY COMMON ELECTRIC LAMP USED IN HOMES IS MARKED 25 WATTS AND USES APPROXIMATELY 0.25 AMPERES. ONE FRESH DRY CELL ON SHORT CIRCUIT WILL DELIVER 30 OR MORE AMPERES. WILL THE CELL LIGHT THE LAMP? ..... - 239 -

46.3 A 50 VOLT CARBON LAMP CARRYING 1 AMPERE HAS ABOUT THE SAME CANDLEPOWER AS A 100 VOLT CARBON LAMP CARRYING 0.5 AMPERE. EXPLAIN. ..... - 239 -

46.4 IF A STORAGE CELL HAS AN E.M.F. OF 2 VOLTS AND FURNISHES A CURRENT OF 5 AMPERES, WHAT IS ITS RATE OF ENERGY EXPENDITURE IN WATTS? ..... - 240 -

46.5 THE PICTURE SHOWS TWO SWITCHES CONNECTED TO A LAMP L, WHICH CAN BE TURNED ON OR OFF AT EITHER SWITCH, A OR B. ..... - 240 -

46.6 HOW MANY 100 VOLT LAMPS EACH CARRYING 0.25 AMPERE CAN BE MAINTAINED ON A CIRCUIT WHERE THE TOTAL POWER MAY NOT EXCEED 600 WATTS?..... - 241 -

46.7 WHAT WILL IT COST TO USE AN ELECTRIC LAUNDRY IRON FOR 6 HOURS IF IT USES 3.5 AMPERES ON A 110 VOLT CIRCUIT, THE COST OF CURRENT BEING 20 CENT PER KILOWATT HOUR?..... - 241 -

46.8 A CERTAIN ELECTRIC TOASTER TAKES 5 AMPERES AT 110 VOLTS. IT WILL MAKE TWO PIECES OF TOAST IN 3 MINUTES. AT WHAT HORSEPOWER DOES THE TOASTER CONVERT ELECTRICAL ENERGY INTO HEAT ENERGY?..... - 242 -

46.9 HOW MANY LAMPS, EACH OF RESISTANCE 20 OHMS AND REQUIRING A CURRENT OF 0.8 AMPERE CAN BE LIGHTED BY A DYNAMO THAT HAS AN OUTPUT OF 4000 WATTS?..... - 242 -

46.10 IF ONE OF THE WIRE LOOPS IN A TUNGSTEN LAMP IS SHORT-CIRCUITED, WHAT EFFECT WILL THIS HAVE ON THE AMOUNT OF CURRENT FLOWING THROUGH THE LAMP? ..... - 242 -

46.11HOW MANY CELLS OF 2 VOLTS FURNISHING 5 AMPERES ARE CAPABLE OF FURNISHING ONE HORSEPOWER? ..... - 242 -

46.12 HOW MANY CALORIES PER MINUTE ARE GIVEN OUT BY AN ELECTRIC TOASTER OF 110 VOLTS AND 5 AMPERES? ..... - 243 -

46.13 SHOW THAT THE EQUATION IN PROBLEM 46.12, CAN BE RE-WRITTEN AS $H = I^2 \times R \times T \times 0.24$. - 243 -

46.14 HOW MANY MINUTES ARE REQUIRED TO HEAT 600 GRAMS OF WATER FROM 15°C TO 100°C BY PASSING 5 AMPERES THROUGH A 20 OHM COIL IMMERSED IN THE WATER?..... - 243 -

46.15 WHY IS IT POSSIBLE TO GET A MUCH LARGER CURRENT FROM A STORAGE CELL THAN A DANIEL CELL? ..... - 243 -

46.16 IF AN AUTOMOBILE IS EQUIPPED WITH 12 VOLT LIGHTS, HOW MANY LEAD-ACID STORAGE CELLS ARE REQUIRED IN THE CAR BATTERY? ..... - 243 -

46.17 A SMALL ARC LAMP REQUIRES A CURRENT OF 5 AMPERES AND AN E.M.F. BETWEEN ITS TERMINALS OF 45 VOLTS. WHAT RESISTANCE MUST BE USED IN SERIES WITH IT TO USE IT IN A 220 VOLT CIRCUIT? ..... - 243 -

47. INDUCED CURRENTS ..... - 245 -

47.1 CAN THE NUMBER OF LINES OF FORCE WITHIN A CLOSED COIL OF WIRE INCREASE OR DECREASE WITHOUT THE LINES CUTTING THROUGH THE WIRE? ..... - 246 -

47.2 UNDER WHAT CONDITIONS CAN A MAGNET PRODUCE AN ELECTRIC CURRENT? ..... - 247 -

47.3 HOW MANY LINES OF FORCE MUST BE CUT EACH SECOND TO INDUCE 10 VOLTS? ..... - 247 -

47.4 IF A COIL OF WIRE IS ROTATED ABOUT A VERTICAL AXIS IN THE EARTH'S MAGNETIC FIELD, AN ALTERNATING CURRENT IS SET UP IN IT. IN WHAT POSITION IS THE COIL WHEN THE CURRENT *CHANGES DIRECTION*? ..... - 247 -

47.5 STATE LENZ'S LAW, AND SHOW HOW IT FOLLOWS FROM THE PRINCIPLE OF CONSERVATION OF ENERGY. ..... - 248 -

47.6 A COIL IS THRUST OVER THE S POLE OF A MAGNET. IS THE DIRECTION OF THE INDUCED CURRENT CLOCKWISE OR COUNTERCLOCKWISE AS YOU LOOK DOWN UPON THE POLE? ..... - 248 -

47.7 A SHIP HAVING AN IRON MAST IS SAILING EASTWARD. IN WHAT DIRECTION IS THE E.M.F. INDUCED IN THE MAST BY THE EARTH'S MAGNETIC FIELD? ..... - 249 -

47.8 ELECTRONS ARE FLOWING FROM BOTTOM TO TOP IN A VERTICAL WIRE. IN WHAT DIRECTION WILL THE WIRE TEND TO MOVE ON ACCOUNT OF THE EARTH'S MAGNETIC FIELD? ..... - 249 -

48. DYNAMOS AND MOTORS ..... - 251 -

48.1 WHAT IS THE FUNCTION (USE) OF THE FIELD MAGNET OF A DYNAMO? ..... - 251 -

48.2 HOW WOULD IT AFFECT THE VOLTAGE OF A DYNAMO TO INCREASE THE SPEED OF ROTATION OF ITS ARMATURE? ..... - 251 -

48.3 A CERTAIN DYNAMO ARMATURE HAS 50 COILS OF 5 LOOPS EACH. THE TOTAL NUMBER OF LOOPS ON THE ARMATURE IS 250. THERE ARE 250 CONDUCTORS ON ONE HALF OF THE ARMATURE AND 250 CONDUCTORS ON THE OTHER HALF OF THE ARMATURE, FOR A TOTAL OF 500 CONDUCTORS ON THE SURFACE OF THE ARMATURE. THE ARMATURE ROTATES 660 TIMES IN ONE MINUTE (11 REVOLUTIONS PER SECOND). EACH CONDUCTOR (500 OF THEM) CUTS THROUGH 2,000,000 STATOR MAGNETIC LINES OF FORCE *TWICE* DURING ONE REVOLUTION, ONCE WHEN IT MOVES UPWARD THROUGH THE STATOR'S MAGNETIC FIELD AND AGAIN WHEN IT MOVES DOWNWARD TO ITS ORIGINAL STARTING POSITION THROUGH THE STATOR'S MAGNETIC FIELD (4,000,000 LINES OF FORCE PER CONDUCTOR PER REVOLUTION). HOW MANY VOLTS DOES THE DYNAMO PRODUCE? ..... - 254 -

48.4 WHAT DOES THE COMMUTATOR OF A DYNAMO DO? ..... - 254 -

48.5 EXPLAIN THE PROCESS OF BUILDING UP THE STATOR FIELD IN A DYNAMO. ..... - 255 -

48.6 EXPLAIN HOW AN ALTERNATING CURRENT IN THE ARMATURE IS TRANSFORMED INTO A DIRECT CURRENT IN THE EXTERNAL CIRCUIT ..... - 255 -

48.7 EXPLAIN HOW A SERIES WOUND MOTOR CAN RUN ON EITHER A DIRECT OR AN ALTERNATING CURRENT. ..... - 255 -

48.8 WILL IT TAKE MORE WORK TO ROTATE A DYNAMO ARMATURE WHEN THE CIRCUIT IS CLOSED THAN WHEN IT IS OPEN? ..... - 257 -

48.9 SINGLE DYNAMOS OFTEN OPERATE AS MANY AS 10,000 INCANDESCENT LAMPS AT 110 VOLTS. IF THESE LAMPS ARE ALL ARRANGED IN PARALLEL, AND EACH REQUIRES A CURRENT OF 0.5 AMPERE, WHAT IS THE TOTAL CURRENT THAT MUST BE FURNISHED BY THE DYNAMO? ..... - 257 -

48.10 HOW MANY 110 VOLT LAMPS, 0.5A PER LAMP, CAN BE LIGHTED BY A 12,000KW GENERATOR? - 258 -

48.11 WHY DOES IT TAKE TWICE AS MUCH WORK TO KEEP A DYNAMO RUNNING WHEN 1000 LIGHTS ARE ON THE CIRCUIT AS WHEN ONLY 500 ARE ON THE CIRCUIT? ..... - 258 -

49. INDUCTION COIL AND TRANSFORMER ..... - 259 -

49.1 DRAW A DIAGRAM OF AN INDUCTION COIL AND EXPLAIN ITS ACTION. ..... - 259 -

49.2 DOES THE SPARK OF AN INDUCTION COIL OCCUR AT MAKE OR BREAK? ..... - 259 -

49.3 EXPLAIN WHY AN INDUCTION COIL IS ABLE TO PRODUCE SUCH AN ENORMOUS VOLTAGE. ..... - 259 -

49.4 WHY COULD AN ARMATURE CORE NOT BE MADE OF COAXIAL CYLINDERS OF IRON RUNNING THE FULL LENGTH OF THE ARMATURE, INSTEAD OF FLAT DISKS? ..... - 260 -

49.5 WHAT RELATION MUST EXIST BETWEEN THE NUMBER OF TURNS ON THE PRIMARY AND SECONDARY COILS OF A TRANSFORMER WHICH FEEDS 110V LAMPS FROM A MAIN LINE WHOSE CONDUCTORS ARE AT 1100 VOLTS? ..... - 260 -

49.6 NAME TWO USES AND TWO DISADVANTAGES OF MECHANICAL FRICTION; OF ELECTRICAL RESISTANCE. ..... - 261 -

50. SPEED AND NATURE OF SOUND..... - 262 -

50.1 A THUNDERCLAP WAS HEARD 5 ½ SECONDS AFTER THE ACCOMPANYING LIGHTNING FLASH WAS SEEN. HOW FAR AWAY DID THE FLASH OCCUR, THE TEMPERATURE AT THE TIME BEING 20 °C? ..... - 262 -

50.2 WHY DOES THE SOUND DIE AWAY VERY GRADUALLY AFTER A BELL IS STRUCK? ..... - 262 -

50.3 WHY DOES PLACING THE HAND BACK OF THE EAR INCREASE A PARTIALLY DEAF PERSON'S ABILITY TO HEAR? ..... - 263 -

50.4 THE VIBRATION RATE OF A FORK IS 256. FIND THE WAVE LENGTH OF THE NOTE GIVEN OUT BY IT AT 20°C. ..... - 263 -

50.5 BECAUSE THE MUSIC OF AN ORCHESTRA REACHES A DISTANT HEARER WITHOUT CONFUSION OF THE PARTS, WHAT MAY BE INFERRED AS TO THE RELATIVE VELOCITIES OF THE NOTES OF DIFFERENT PITCH? .... - 263 -

50.6 WHAT IS THE RELATION BETWEEN PITCH AND WAVELENGTH? ..... - 263 -

50.7 IF WE INCREASE THE AMPLITUDE OF VIBRATION OF A GUITAR STRING, WHAT EFFECT DOES THIS HAVE ON THE AMPLITUDE OF THE WAVE? ..... - 263 -

51. SOUND, REFLECTION, REINFORCEMENT, INTERFERENCE.- 265 -

51.1 ACCOUNT FOR THE SOUND PRODUCED BY BLOWING ACROSS THE MOUTH OF AN EMPTY BOTTLE.- 265 -

51.2 EXPLAIN THE "ROARING" SOUND HEARD WHEN A SEA SHELL, A TUMBLER, OR AN EMPTY TIN CAN IS HELD TO THE EAR. ..... - 265 -

51.3 FIND THE NUMBER OF VIBRATIONS PER SECOND OF A TUNING FORK THAT PRODUCES RESONANCE IN A CLOSED PIPE 1 FOOT LONG. ..... - 266 -

51.4 A HUNTER HEARS AN ECHO FIVE AND ONE-HALF SECONDS AFTER HE FIRES HIS RIFLE. HOW FAR AWAY WAS THE REFLECTING SURFACE IF THE TEMPERATURE OF THE AIR WAS 20°C? ..... - 266 -

51.5 THE SHORTEST CLOSED AIR COLUMN THAT PRODUCED RESONANCE WHEN A TUNING FORK WAS HELD ABOVE IT WAS 32 CENTIMETERS LONG. FIND THE FREQUENCY OF VIBRATION OF THE FORK IF THE SPEED OF SOUND IS TAKEN TO BE 340 METERS PER SECOND. ..... - 266 -

51.6 A TUNING FORK PRODUCES A STRONG RESONANT SOUND ABOVE AN AIR COLUMN WHEN IT IS HELD ON ITS FLAT SIDE OR ON ITS EDGE, BUT WHEN HELD CORNERWISE OVER THE AIR COLUMN THE RESONANCE CEASES. EXPLAIN. ..... - 266 -

51.7 WHAT IS MEANT BY THE PHENOMENON "BEATS" IN SOUND? ..... - 267 -

51.8 WHAT IS THE LENGTH OF THE SHORTEST CLOSED TUBE THAT WILL ACT AS A RESONATOR FOR A FORK WHOSE VIBRATION RATE IS 427 PER SECOND? ..... - 267 -

51.9 A TUNING FORK MAKING 500 VIBRATIONS PER SECOND IS FOUND TO PRODUCE RESONANCE OVER AN AIR COLUMN LIKE THAT SHOWN IN THE PICTURE. FIRST WHEN THE WATER IS A CERTAIN DISTANCE FROM THE TOP, AND THEN AGAIN WHEN IT IS 34 CENTIMETERS LOWER. WHAT TEMPERATURE WAS THE AIR? - 267 -

51.10 SHOW WHY AN OPEN PIPE NEEDS TO BE TWICE AS LONG AS A CLOSED PIPE IF IT IS TO RESPOND TO THE SAME NOTE. ..... - 268 -

52. PROPERTIES OF MUSICAL SOUNDS ..... - 269 -

52.1 IN WHAT THREE WAYS DO PIANO MAKERS OBTAIN THE DIFFERENT PITCHES (NOTES)? ..... - 269 -

52.2 WHAT DID HELMHOLZ PROVE BY MEANS OF HIS RESONATORS? ..... - 269 -

52.3 IF MIDDLE C IS STRUCK ON A PIANO WHILE THE KEY FOR G IN THE OCTAVE ABOVE IS HELD DOWN, G WILL BE DISTINCTLY HEARD WHEN C IS SILENCED. EXPLAIN. ..... - 269 -

52.4 AT WHAT POINT MUST THE G_1 STRING BE PRESSED BY THE FINGER OF A VIOLINIST TO PRODUCE THE NOTE C? ..... - 269 -

52.5 IF ONE WIRE, B, HAS TWICE THE LENGTH OF ANOTHER, A, AND IS STRETCHED BY FOUR TIMES THE STRETCHING FORCE ON A, HOW WILL THEIR VIBRATION NUMBERS COMPARE? ..... - 269 -

52.6 A WIRE PRODUCES THE NOTE G. WHAT IS ITS FOURTH OVERTONE? ..... - 269 -

52.7 IF MIDDLE C HAD 300 VIBRATIONS PER SECOND, HOW MANY WOULD F AND A HAVE? ..... - 269 -

52.8 WHAT IS THE FOURTH OVERTONE OF C? ..... - 270 -

52.9 THERE ARE SEVEN OCTAVES AND TWO NOTES TO AN ORDINARY PIANO, THE LOWEST NOTE BEING A_4, AND THE HIGHEST ONE $C^{\prime\prime\prime\prime}$. IF THE VIBRATION NUMBER OF THE LOWEST NOTE IS 27, FIND THE VIBRATION NOTE OF THE HIGHEST. ..... - 270 -

52.10 FIND THE WAVE LENGTH OF THE LOWEST NOTE ON THE PIANO AND THE WAVE LENGTH OF THE HIGHEST NOTE ON THE PIANO. ..... - 270 -

52.11 A VIOLIN STRING IS COMMONLY BOWED ABOUT ONE SEVENTH OF ITS LENGTH FROM ONE END. WHY IS THIS BETTER THAN BOWING THE VIOLIN IN THE MIDDLE OF THE STRINGS? ..... - 270 -

52.12 BUILD UP A DIATONIC SCALE ON C=264 VIBRATIONS PER SECOND. ..... - 271 -

53. WIND INSTRUMENTS ..... - 272 -

53.1 WHAT PROVES THAT A MUSICAL NOTE IS TRANSMITTED AS A WAVE MOTION?..... - 272 -

53.2 WHAT EVIDENCE SHOWS THAT SOUND WAVES ARE LONGITUDINAL WAVES?..... - 272 -

53.3 WHY IS THE PITCH (FREQUENCY) OF A SOUND PRODUCED BY A PHONOGRAPH NEEDLE RAISED BY INCREASING THE SPEED OF ROTATION OF THE RECORD? ..... - 272 -

53.4 WHAT WILL BE THE RELATIVE LENGTHS OF A SERIES OF ORGAN PIPES WHICH PRODUCE THE EIGHT NOTES OF A DIATONIC SCALE? ..... - 272 -

53.5 WILL THE PITCH (FREQUENCY) OF A PIPE ORGAN BE THE SAME IN SUMMER AS ON A COLD DAY IN WINTER? WHAT COULD CAUSE A DIFFERENCE?..... - 273 -

53.6 EXPLAIN HOW AN INSTRUMENT LIKE THE BUGLE, WHICH HAS AN AIR COLUMN OF UNCHANGING LENGTH, BE MADE TO PRODUCE SEVERAL NOTES OF DIFFERENT FREQUENCY, SUCH AS C_4, G_4, C_5, E_5, G_5?- 273 -

53.7 WHY IS THE QUALITY OF AN OPEN PIPE ORGAN DIFFERENT FROM THAT OF A CLOSED PIPE ORGAN?.... - 273 -

53.8 THE VELOCITY OF SOUND IN HYDROGEN IS ABOUT FOUR TIMES GREATER THAN IN AIR. IF A C PIPE IS BLOWN WITH HYDROGEN, WHAT WILL BE THE FREQUENCY OF THE NOTE PRODUCED?..... - 274 -

54. THE PROPAGATION OF LIGHT ..... - 275 -

54.1 THE FIGURE SHOWS A SHADOW, THE PORTION ACDB OF WHICH IS CALLED THE UMBRA, AEC AND BDF THE PENUMBRA. WHAT KIND OF LIGHT SOURCE HAS NO PENUMBRA? ..... - 275 -

54.2 THE SUN IS MUCH LARGER THAN THE EARTH. DRAW A DIAGRAM SHOWING THE SHAPE OF THE EARTH'S UMBRA AND PENUMBRA..... - 275 -

54.3 WILL IT EVER BE POSSIBLE FOR THE MOON TO TOTALLY ECLIPSE (COVER UP) THE SUN FROM THE WHOLE OF THE EARTH'S SURFACE AT ONE TIME? ..... - 276 -

54.4 SIRIUS, THE BRIGHTEST STAR, IS ABOUT 52 X 10^{12} MILES AWAY FROM THE EARTH. IF IT WERE SUDDENLY ANNIHILATED, HOW LONG WOULD THE LIGHT IT PRODUCED CONTINUE TO SHINE ON THE EARTH?- 276 -

54.5 WHY IS A ROOM WITH WHITE WALLS MUCH LIGHTER THAN A SIMILAR ROOM WITH BLACK WALLS? - 277 -

54.6 IF THE WORD "WHITE" BE PAINTED WITH WHITE PAINT ACROSS THE FACE OF A MIRROR AND HELD IN THE PATH OF A BEAM OF SUNLIGHT ENTERING A DARKENED ROOM, IN THE MIDDLE OF THE SPOT ON THE WALL WHICH RECEIVES THE REFLECTED BEAM, THE WORK "WHITE" WILL APPEAR IN BLACK LETTERS. EXPLAIN. ..... - 277 -

54.7 COMPARE THE REFLECTION OF LIGHT FROM WHITE BLOTTING PAPER WITH THAT FROM A PLANE MIRROR. WHICH OF THESE OBJECTS IS MORE EASILY SEEN FROM A DISTANCE, AND WHY?..... - 277 -

54.8 DEVISE AN ARRANGEMENT OF MIRRORS BY MEANS OF WHICH YOU COULD SEE OVER AND BEYOND A HIGH STONE WALL OR TRENCH EMBANKMENT. THIS IS A VERY SIMPLE FORM OF PERISCOPE. ..... - 277 -

54.9 DRAW DIAGRAMS TO SHOW IN WHAT WAY A BEAM OF LIGHT IS BENT (A) IN PASSING THROUGH A PRISM AND (B) IN PASSING OBLIQUELY (AT AN ANGLE) THROUGH A PLATE GLASS WINDOW..... - 277 -

54.10 EXPLAIN THE EFFECT OF THE ANTI-GLARE "LENS" OF AN AUTOMOBILE HEADLIGHT. ..... - 278 -

54.11 THE MOON HAS PRACTICALLY NO ATMOSPHERE. WE KNOW THIS BECAUSE WHEN A STAR APPEARS TO PASS BEHIND THE MOON, THERE IS NO DECREASE OR INCREASE IN ITS APPARENT VELOCITY WHILE IT IS DISAPPEARING OR COMING INTO VIEW AGAIN. IF THE MOON HAD AN ATMOSPHERE, LIKE THE EARTH,

EXPLAIN HOW THIS WOULD AFFECT THE APPARENT VELOCITY OF THE STAR AT BOTH OF THESE TIMES. . - 278 -

54.12 IF A PENNY IS PLACED IN THE BOTTOM OF A VESSEL IN SUCH A POSITION THAT THE EDGE JUST HIDES IT FROM VIEW, IT WILL BECOME VISIBLE AS SOON AS WATER IS POURED INTO THE VESSEL. EXPLAIN. . - 279 -

54.13 A STICK THAT IS HELD IN WATER APPEARS BENT. EXPLAIN. ..... - 279 -

54.14 A GLASS PRISM PLACED IN THE POSITION SHOWN IS THE MOST PERFECT REFLECTOR KNOWN. WHY IS IT BETTER THAN AN ORDINARY MIRROR? ..... - 280 -

54.15 DIAGONAL EYEPIECES CONTAINING A RIGHT-ANGLE PRISM OF CROWN GLASS ARE USED ON ASTRONOMICAL TELESCOPES TO VIEW CELESTIAL OBJECTS AT A HIGH ALTITUDE. EXPLAIN..... - 281 -

54.16 EXPLAIN WHY A STRAIGHT WIRE SEEN OBLIQUELY (AT AN ANGLE) THROUGH A PIECE OF GLASS APPEARS BROKEN. ..... - 281 -

54.17 THE EARTH REFLECTS SIXTEEN TIMES AS MUCH LIGHT TO THE MOON, AS THE MOON DOES TO THE EARTH. (A) TRACE FROM THE SUN TO THE EYE OF AN OBSERVER THE LIGHT BY WHICH THE OBSERVER IS ABLE TO SEE THE DARK PART OF THE "NEW" MOON. (B) WHY CAN WE NOT SEE THE DARK PART OF A THIRD-QUARTER MOON? ..... - 281 -

55. THE NATURE OF LIGHT ..... - 283 -

55.1 EXPLAIN THE DIFFERENCE BETWEEN CANDLE POWER, INTENSITY OF LIGHT, AND INTENSITY OF ILLUMINATION. ..... - 283 -

55.2 HOW MANY CANDLES WILL BE REQUIRED TO PRODUCE THE SAME INTENSITY OF ILLUMINATION AT TWO METERS DISTANCE THAT IS PRODUCED BY ONE CANDLE AT 30 CENTIMETERS DISTANCE? ..... - 283 -

55.3 A 500 CD LAMP IS PLACED 50 METERS FROM A DARKLY SHADED PLACE ALONG A STREET. AT WHAT DISTANCE WOULD A 100 CD LAMP HAVE TO BE TO PRODUCE THE SAME INTENSITY OF ILLUMINATION? - 283 -

55.4 IF A 2 CD LIGHT AT A DISTANCE OF 1 FT GIVES ENOUGH ILLUMINATION FOR READING, HOW FAR AWAY MUST A 32 CD LAMP BE PLACED TO CAUSE THE SAME ILLUMINATION? ..... - 284 -

55.5 A PHOTOMETER IS PLACED BETWEEN AN ARC LIGHT AND AN INCANDESCENT LIGHT OF 32 CD. IT IS EQUALLY ILLUMINATED ON BOTH SIDES WHEN IT IS 10 FT. FROM THE INCANDESCENT LIGHT AND 36 FT. FROM THE ARC LIGHT. WHAT IS THE CANDLE POWER OF THE ARC? ..... - 284 -

55.6 A 5CD AND A 30 CD SOURCE OF LIGHT ARE 2 METERS APART. AT WHAT POSITION MUST A PIECE OF PAPER BE PLACED FOR BOTH OF ITS SIDES TO BE EQUALLY ILLUMINATED? ..... - 284 -

55.7 IF THE SUN WERE AT THE DISTANCE OF THE MOON FROM THE EARTH, INSTEAD OF AT ITS PRESENT DISTANCE, HOW MUCH STRONGER WOULD SUNLIGHT BE ON THE EARTH? ..... - 284 -

55.8 IF A GAS FLAME IS 300 CM FROM A RUMFORD PHOTOMETER, AND A ONE CANDELA SOURCE 50 CM AWAY GIVES A SHADOW OF EQUAL INTENSITY, WHAT IS THE ILLUMINATION OF THE GAS FLAME? ..... - 285 -

55.9 WILL A BEAM OF LIGHT GOING FROM WATER INTO A PIECE OF FLINT GLASS BE BENT TOWARD OR AWAY FROM A PERPENDICULAR LINE DRAWN TO THE SURFACE OF THE GLASS? ..... - 285 -

55.10 WHEN LIGHT PASSES OBLIQUELY FROM AIR INTO CARBON-BISULPHIDE, IT IS BENT MORE THAN WHEN IT PASSES FROM AIR INTO WATER AT THE SAME ANGLE. IS THE SPEED OF LIGHT IN CARBON DISULPHIDE GREATER OR LESS THAN IN WATER? ..... - 285 -

55.11 IF LIGHT TRAVELS AT A VELOCITY OF 186,000 MILES PER SECOND IN AIR, WHAT IS ITS VELOCITY IN WATER, IN CROWN GLASS, AND IN DIAMOND? ..... - 286 -

56. IMAGE FORMATION ..... - 287 -

SUMMARY OF LAWS FOR LENSES AND SPHERICAL MIRRORS..... - 287 -

56.1 SHOW FROM A CONSTRUCTION OF AN IMAGE THAT A MAN CANNOT SEE HIS ENTIRE LENGTH IN A VERTICAL MIRROR UNLESS THE MIRROR IS AT LEAST HALF AS TALL AS HE IS. DECIDE FROM A STUDY OF THE FIGURE WHETHER THE DISTANCE OF THE MAN FROM THE MIRROR AFFECTS THE SITUATION. ..... - 287 -

56.2 A MAN IS STANDING IN FRONT OF A PLANE MIRROR WHICH IS VERY MUCH TALLER THAN HE IS. THE MIRROR IS TIPPED TOWARD HIM UNTIL IT MAKES AN ANGLE OF 45° WITH THE HORIZONTAL. HE SEES HIS FULL LENGTH. WHAT POSITION DOES HIS IMAGE OCCUPY? ..... - 288 -

56.3 HOW TALL IS A TREE 200 FEET AWAY IF THE IMAGE OF IT FORMED BY A LENS HAVING A FOCAL LENGTH OF 4 INCHES IS ONE INCH LONG? CONSIDER THE IMAGE TO BE IN THE FOCAL PLANE. ..... - 289 -

56.4 HOW LONG AN IMAGE OF THE SAME TREE WILL BE FORMED IN THE FOCAL PLANE OF A LENS HAVING A FOCAL LENGTH OF NINE INCHES? ..... - 289 -

56.5 WHAT IS THE DIFFERENCE BETWEEN A REAL AND A VIRTUAL IMAGE? ..... - 289 -

56.6 WHEN DOES A CONVEX LENS FORM A REAL, AND WHEN A VIRTUAL, IMAGE? ..... - 289 -

56.7 WHEN A CAMERA HAVING A BELLOWS IS ADJUSTED TO PHOTOGRAPH A DISTANT OBJECT, WHAT CHANGE IN LENGTH OF ITS BELLOWS MUST BE MADE TO PHOTOGRAPH A NEAR OBJECT? ..... - 290 -

56.8 LIGHT RAYS DIVERGE FROM A POINT 20 CM IN FRONT OF A CONVERGING LENS, WHOSE FOCAL LENGTH IS 4 CM. AT WHAT POINT DO THE RAYS COME TO A FOCUS? ..... - 291 -

56.9 AN OBJECT 2 CM LONG WAS PLACED 10 CM FROM A CONVERGING LENS AND THE IMAGE WAS FORMED 40 CM FROM THE LENS ON ITS OTHER SIDE. FIND THE FOCAL LENGTH OF THE LENS, AND THE LENGTH OF THE IMAGE. ..... - 291 -

56.10 AN OBJECT IS 15 CM IN FRONT OF A CONVEX LENS OF 12 CM FOCAL LENGTH. WHAT WILL BE THE NATURE OF THE IMAGE, ITS SIZE, AND ITS DISTANCE FROM THE LENS? ..... - 292 -

56.11 CAN A CONVEX MIRROR EVER FORM AN INVERTED IMAGE? WHY? ..... - 292 -

57. OPTICAL INSTRUMENTS ..... - 294 -

57.1 WHY IS IT NECESSARY FOR THE PUPILS OF YOUR EYES TO BE LARGER IN A DIM CELLAR THAN IN THE SUNSHINE? ..... - 294 -

WHY DOES A PHOTOGRAPHER WITH A FILM CAMERA USE A SMALL EXPOSURE TIME ON DULL DAYS WHEN PHOTOGRAPHING MOVING OBJECTS? ..... - 294 -

57.2 IF A PHOTOGRAPHER WISHES TO OBTAIN THE FULL BODY, DOES HE PLACE THE SUBJECT NEARER TO OR FARTHER FROM THE CAMERA THAN IF HE WISHES TO ONLY PHOTOGRAPH THE HEAD? ..... - 294 -

57.3 A CHILD 3 FT HIGH STOOD 15 FT FROM A CAMERA WHOSE LENS HAD A FOCAL LENGTH OF 18 IN (= 3/2 FT). WHAT WAS THE DISTANCE FROM THE LENS TO THE FOCAL PLANE AND THE LENGTH OF THE CHILD'S PHOTOGRAPH? ..... - 294 -

57.4 IF 20 S IS THE PROPER LENGTH OF EXPOSURE WHEN YOU ARE PRINTING PHOTOGRAPHS USING A LIGHT 8 INCHES FROM THE PRINTING FRAME, WHAT LENGTH OF EXPOSURE WOULD BE REQUIRED IN PRINTING FROM THE SAME NEGATIVE WHEN THE SAME LIGHT IS AT A DISTANCE OF 16 IN FROM THE PRINTING FRAME? ..... - 294 -

57.5 IF A 20 SECOND EXPOSURE IS CORRECT AT A DISTANCE OF 6 IN FROM AN 8 CANDELA ELECTRIC LIGHT, WHAT IS THE REQUIRED TIME OF EXPOSURE AT A DISTANCE OF 12 IN FROM A 32 CANDELA ELECTRIC LIGHT? ..... - 295 -

57.6 THE IMAGE ON THE RETINA OF A BOOK HELD 1 FT FROM THE EYE IS LARGER THAN THE IMAGE OF A HOUSE ON THE OPPOSITE SIDE OF THE STREET. WHY DO WE NOT JUDGE THAT THE BOOK IS ACTUALLY LARGER THAN THE HOUSE? ..... - 295 -

57.7 WHAT SORT OF LENS IS REQUIRED TO CORRECT SHORT-SIGHTEDNESS? WHAT SORT IS REQUIRED FOR LONG-SIGHTEDNESS? EXPLAIN USING A DIAGRAM. ..... - 295 -

57.8 WHAT IS THE MAGNIFYING POWER OF A LENS HAVING A FOCAL LENGTH OF ¼ IN WHEN THE LENS IS USED AS A SIMPLE MAGNIFIER? ..... - 296 -

57.9 IF THE LENGTH OF A MICROSCOPE TUBE IS INCREASED AFTER IT HAS BEEN USED TO BRING AN OBJECT INTO FOCUS, MUST THE OBJECT BE MOVED NEARER TO OR FARTHER FROM THE LENS TO BRING THE OBJECT INTO FOCUS AGAIN? ..... - 297 -

57.10 EXPLAIN AS WELL AS YOU CAN HOW A TELESCOPE FORMS THE IMAGE THAT YOU SEE WHEN YOU LOOK INTO IT. ..... - 297 -

57.11 IS THE IMAGE ON THE RETINA ERECT OR INVERTED? ..... - 297 -

58. COLOR PHENOMENA ..... - 299 -

58.1 WHAT DETERMINES THE COLOR OF AN OPAQUE BODY? ..... - 299 -

58.2 WHAT IS WHITE? ..... - 299 -

58.3 WHY DO WHITE BODIES LOOK BLUE WHEN SEEN THROUGH BLUE GLASS? ..... - 299 -

58.4 WHAT COLOR WOULD A YELLOW OBJECT APPEAR TO HAVE IF LOOKED AT THROUGH A BLUE GLASS?. - 299 -

58.5 A GAS FLAME IS DISTINCTLY YELLOW AS COMPARED WITH SUNLIGHT. WHAT PHOTONS, THEN, MUST BE COMPARATIVELY FEW IN THE SPECTRUM OF A GAS FLAME? ..... - 299 -

58.6 WHY DOES A DARK BLUE OBJECT APPEAR TO BE BLACK WHEN VIEWED BY CANDLE LIGHT? ..... - 299 -

58.7 CERTAIN BLUES AND GREENS CAN NOT BE DISTINGUISHED FROM ANOTHER BY CANDLE LIGHT. EXPLAIN. ..... - 300 -

58.8 DOES BLUE LIGHT TRAVEL MORE SLOWLY OR FASTER IN GLASS THAN RED LIGHT? ..... - 300 -

59. SPECTRA ..... - 301 -

59.1 FROM THE FOLLOWING TABLE CALCULATE HOW MANY WAVELENGTHS OF RED AND OF VIOLET LIGHT THERE ARE TO AN INCH. ..... - 301 -

59.2 IN WHAT PART OF THE SKY WILL A RAINBOW APPEAR IF IT IS FORMED IN THE EARLY MORNING? . - 301 -

59.3 WHY DO WE BELIEVE THERE IS SODIUM IN THE SUN? ..... - 301 -

59.4 WHAT SORT OF SPECTRUM SHOULD MOONLIGHT GIVE (THE MOON HAS NO ATMOSPHERE)? ..... - 302 -

59.5 IF YOU WERE GIVEN A MIXTURE OF A NUMBER OF SALTS, HOW WOULD YOU PROCEED USING A BUNSEN BURNER, A PRISM, AND A SLIT TO DETERMINE WHETHER THERE WAS ANY CALCIUM IN THE MIXTURE? . - 302 -

59.6 DRAW A DIAGRAM OF A SLIT, A PRISM, AND A LENS, SO PLACED AS TO FORM A PURE SPECTRUM. - 302 -

59.7 HOW CAN YOU SHOW THAT THE WAVE LENGTHS OF GREEN AND RED LIGHTS ARE DIFFERENT, AND HOW CAN YOU DETERMINE WHICH ONE HAS THE LONGER WAVELENGTH? ..... - 303 -

60. INVISIBLE RADIATIONS ..... - 304 -

60.1 THE ATMOSPHERE IS TRANSPARENT TO MOST OF THE SUN'S RAYS. WHY ARE THE UPPER REGIONS OF THE ATMOSPHERE SO MUCH COLDER THAN THE LOWER REGIONS? ..... - 304 -

60.2 WHEN A MAN IS SITTING IN FRONT OF AN OPEN FIRE, DOES HE RECEIVE MOST OF THE HEAT FROM THE FIRE BY CONDUCTION, CONVECTION, OR RADIATION? ..... - 304 -

60.3 SUNLIGHT, WHEN COMING TO THE EYE TRAVELS A MUCH LONGER PATH THROUGH THE AIR AT SUNRISE AND SUNSET THAN IT DOES AT NOON. SINCE THE SUN APPEARS RED OR YELLOW AT THESE TIMES, WHAT RAYS ARE ABSORBED MOST BY THE ATMOSPHERE? ..... - 304 -

60.4 GLASS TRANSMITS ALL THE VISIBLE PHOTONS, BUT DOES NOT TRANSMIT THE INFRA-RED, LOW MASS PHOTONS. FROM THIS FACT, EXPLAIN THE PRINCIPLE OF THE HOTBED. ..... - 304 -

60.5 WHICH WILL BE COOLER ON A HOT DAY, A WHITE HAT OR A BLACK ONE? ..... - 305 -

60.6 WILL TEA COOL MORE QUICKLY IN A POLISHED OR IN A TARNISHED METAL VESSEL? ..... - 305 -

60.7 WHICH EMITS MORE "RED" PHOTONS, A WHITE-HOT IRON OR THE SAME IRON WHEN IT IS RED-HOT? ... - 305 -

60.8 LIQUID AIR FLASKS AND THERMOS BOTTLES ARE DOUBLE-WALLED GLASS VESSELS WITH A VACUUM BETWEEN THE WALLS. LIQUID AIR (BOILING POINT OF -195°C) WILL KEEP MANY TIMES LONGER IF THE GLASS WALLS ARE SILVERED THAN IF THEY ARE NOT. WHY? ..... - 305 -

WHY IS THE SPACE BETWEEN THE WALLS EVACUATED? ..... - 305 -

61. ELECTRICAL RADIATIONS ..... - 306 -

61.1 WHY IS IT NECESSARY TO USE A RECTIFYING CIRCUIT IN SERIES WITH A TELEPHONE RECEIVER TO DETECT SOUND CAUSED BY THE ELECTRIC WAVES? ..... - 306 -

61.2 EXPLAIN WHY AN ELECTROSCOPE IS DISCHARGED WHEN A BIT OF RADIUM IS BROUGHT NEAR IT. - 306 -

61.3 THE WAVE LENGTH OF THE SHORTEST X-RAYS IS ABOUT 1×10^{-8} CM = 1×10^{-10} M. HOW MANY TIMES GREATER IS THE WAVE LENGTH OF GREEN LIGHT (5.2×10^{-5} CM = 5.2×10^{-7} M). ..... - 306 -

1. THE UNIVERSAL POWER OF 1

Let's start at the beginning.

What is one?
One is 1.

What do we know about 1?

***Anything divided by itself is 1.**
($\frac{3}{3}=1$; $\frac{1/4}{1/4}=1$; $\frac{your\_name}{your\_name}=1$; $\frac{ft}{ft}=1$; $\frac{cm}{cm}=1$).
***Anything divided by <u>its equal</u> is 1.**

($\frac{1Ft}{12in}=1$; $\frac{12in}{1Ft}=1$; $\frac{16oz}{1lb}=1$; $\frac{1lb}{16oz}=1$; $\frac{100cm}{1m}=1$; $\frac{1m}{100cm}=1$;
$\frac{family}{father+mother+children}=1$).

How can 1 be used?

***Anything multiplied by 1 <u>remains itself.</u>**
(3 X $\frac{1/4}{1/4}$ = 3; 5 X $\frac{12in}{1ft}$ = 5; 16 X $\frac{your\_name}{your\_name}$ = 16; .....).

***Anything divided by 1 <u>remains itself.</u>**
(3 / $\frac{1/4}{1/4}$ = 3; 5 / $\frac{12in}{1ft}$ = 5; 16 / $\frac{your\_name}{your\_name}$ = 16; .....).

Up to here, things seem to be fairly simple. Are they really? **No, they aren't**. In fact, up to here **the most difficult things in human thinking have been discussed.**

This is where we make mistakes. Be certain that you understand and are comfortable with what has been said. One (1) is a very powerful concept that permeates all of existence, and is a certain way to determine the truth about things you are interested in from what you already know to be true.

Now, let's use 1 to compare things.

We measure things (5 inches, 115 meters, 150 grams, 36 pounds, 17 Liters, 19 Quarts, 15 lb/in^2, 76 meters/s^2) and compare measures <u>of the same kind</u> (meaning measures of length; measures of volume; measures of area; measures of pressure, velocity, acceleration .....).

If we measure something and want to know what the quantity being measured is equal to in another measure <u>of the same kind</u>, we simply multiply the quantity <u>we know</u> by 1!
How do we do that?

Suppose we *know* something to be 5 inches long and *want to know* how long it is in centimeters.

***2.54 centimeters are equal to one inch. Anything divided by <u>its equal</u> is 1.**

$\frac{2.54cm}{1in}$ = 1.

It is also true that $\frac{1in}{2.54cm}$ = 1, because **anything divided by <u>its equal</u> is 1.**

Both of these fractions are called conversion factors, because we can use them to convert (to change) centimeters into inches, or to change inches into centimeters.

Let's use these two conversion factors to find out how many centimeters are in 5 inches.

We could multiply 5 inches by 1 (in the form of $\frac{2.54cm}{1in}$) to determine how many centimeters are in 5 inches.

$\frac{5in}{1}$ x $\frac{2.54cm}{1in}$ = 12.7 cm. 5 inches = 12.7 cm.

This makes sense to us. All we did was to multiply 5 <u>inches by 1</u> (in the form of the conversion factor $\frac{2.54cm}{1in}$), and we found out how many centimeters are contained in 5 inches!

Now, let's multiply 5 inches by 1 using the other conversion factor $\frac{1in}{2.54cm}$.

We already know that the answer will be equal to 5 inches and will be true, because we are only multiplying 5inches <u>by 1</u>, which equals 5 inches. This is true because **anything multiplied by 1 <u>remains itself.</u>** The answer will <u>*look different*</u> than 5 inches, but it <u>*will be exactly equal to*</u> 5 inches.

$\frac{5in}{1}$ x $\frac{1in}{2.54cm}$ = $\frac{5in^2}{2.54cm}$.

So, 5 inches = $\frac{5in^2}{2.54cm}$.

This <u>is</u> a true statement, <u>but it doesn't make sense to us</u>!

This causes most people not to understand and to be afraid of math and natural sciences, namely, receiving answers that don't make sense.

<u>The slightest insight can change that</u>! We ask ourselves a question.

Which <u>form</u> of 1 (which conversion factor) do we use to find what we want to know from what we already know, so that the answer makes sense to us?

Conversion Factors

When we know an amount of *What We Want To Know* that is equal to an amount of *What We Know,* we can make **two** conversion factors.

For example, $\frac{2.54cm}{1in}$ and $\frac{1in}{2.54cm}$ are both conversion factors we can make from one thing that we know to be true, namely, that 2.54cm are equal to 1 inch.

Remember these two underlined things:

<u>First</u>, we notice that when we use conversion factors, if *What We Know* is in the numerator (top) of our fraction, *What We Know* must be in the denominator (bottom) of our conversion factor.

$\frac{WhatWeKnow}{1}$ X the conversion factor $\frac{WhatWeWantToKnow}{WhatWeKnow} = \frac{WhatWeWantToKnow}{1}$.

<u>Second</u>, we notice that if *What We Know* is in the denominator (bottom) of our fraction, *What We Know* must be in the numerator (top) of our conversion factor.

$\frac{1}{WhatWeKnow}$ X the conversion factor $\frac{WhatWeKnow}{WhatWeWantToKnow} = \frac{1}{WhatWeWantToKnow}$.

Example: We want to change the pressure we know, $\frac{5lb}{in^2}$, into $\frac{lb}{cm^2}$. We must change square inches into square centimeters.

1in = 2.54cm.

1in x 1in = 2.54cm x 2.54cm. The order in which we multiply doesn't make any difference, the answer is still the same. Let's change the order here.

1 x 1 x in x in = 2.54 x 2.54 x cm x cm. *in x in = in². cm x cm = cm².*

$1in^2 = 6.45cm^2$.

We now know that $1in^2 = 6.45cm^2$.

We can form **two** conversion factors: $\frac{1in^2}{6.45cm^2}$ and $\frac{6.45cm^2}{1in^2}$, both equal to 1.

We know a pressure, $\frac{5lb}{in^2}$. We want to know this pressure in $\frac{lb}{cm^2}$. We want to change (to convert) in^2 into cm^2.

Square inches are in the denominator (bottom) of the fraction we know, $\frac{5lb}{in^2}$.

We therefore need the conversion factor where in^2 is in the numerator (top) of the conversion factor we are going to use. We need the conversion factor $\frac{1in^2}{6.45cm^2}$.

We multiply the pressure we know by this conversion factor:

$$\frac{5lb}{in^2} = \frac{5lb}{1in^2} \times \frac{1in^2}{6.45cm^2} = \frac{5 \times 1}{6.45} \times \frac{lb \times in^2}{in^2 \times cm^2} = \frac{5}{6.45} \times \frac{lb}{cm^2} \times \frac{in^2}{in^2} = 0.775 \times \frac{lb}{cm^2} \times 1 = 0.775 \frac{lb}{cm^2}.$$

Notice that in physics we calculate with units (the names of the things we measure) exactly as we do with numbers.
In the above calculation we separated the units to place equal units above and below another (here it was in^2). **Anything divided by itself is 1** ($in^2/in^2=1$**). Anything multiplied by 1 remains itself** ($lb/cm^2 \times 1 = lb/cm^2$).

The pressure 5 pounds per square inch is equal to the pressure 0.775 pounds per square centimeter!

Now, let's use the power of 1 to find something else out from things we know.

How many inches are equal to 73 meters?

We start with <u>what we know</u>, 73 Meters. What <u>we want to know</u> is inches.

Suppose we do not know how many inches are in a meter, but:

We know that 1 inch is equal to 2.54 centimeters, and
we also know that 1 meter is equal to 100 centimeters.

We can make four conversion factors from what we know:

$$\frac{100cm}{1m} \qquad \frac{1m}{100cm} \qquad \frac{1in}{2.54cm} \qquad \frac{2.54cm}{1in}$$

Each of them is equal to 1, because their numerators and denominators are equal, and **anything divided by its equal is 1**.

We will change meters into centimeters, and then, knowing centimeters, we will change the centimeters into inches.

In a first step, we can use one of the conversion factors to change 73 meters into centimeters.

We know 73meters, which is the fraction $\frac{73m}{1}$. **Anything divided by 1 remains itself**. Meters are in the numerator (top) of the fraction we know.

Meters must therefore be in the denominator (bottom) of the conversion factor we are going to use. We want to know centimeters.

The conversion factor we need is $\frac{WhatWeWantToKnow}{WhatWeKnow} = \frac{cm}{m}$.

We need the conversion factor $\frac{100cm}{1m}$. Remember, we calculate with the units exactly like we calculate with numbers.

$\frac{73m}{1} \times \frac{100cm}{1m} = \frac{73 \times 100}{1 \times 1} \times \frac{m}{m} \times \frac{cm}{1} = \frac{7300}{1} \times 1 \times \frac{cm}{1} = 7300 \times 1 \times cm = 7300cm.$ We now know that in 73 meters there are 7,300cm.

In a second step, we can use another conversion factor to change the 7,300 centimeters we *now* know into inches.

We now know centimeters and want to know inches.

We know 7300cm, which is the fraction $\frac{7300cm}{1}$. **Anything divided by 1 remains itself**. Centimeters are in the numerator (the top) of the fraction we know.

Centimeters must therefore be in the denominator (the bottom) of the conversion factor we are going to use. We want to know inches.

The conversion factor we need is $\frac{in}{cm}$.

We need the conversion factor $\frac{1in}{2.54cm}$.

$$7300cm = \frac{7300cm}{1} = \frac{7300cm}{1} \times \frac{1in}{2.54cm} = \frac{7300 \times 1}{1 \times 2.54} \times \frac{cm}{cm} \times \frac{in}{1} = 2{,}874 \times 1 \times in = 2{,}874in.$$

We now know that 73 Meters are equal to 2,874 inches.

We could combine the first and second steps we just took into a simple single step to find out how many inches are in 73 meters, as follows:

First, we convert the meters into centimeters and immediately afterward we convert the centimeters into inches, using the two conversion factors we correctly selected.

$$\frac{73m}{1} \times \frac{100cm}{1m} \times \frac{1in}{2.54cm} = \frac{73 \times 100}{1 \times 1 \times 2.54} \times \frac{cm}{cm} \times \frac{m}{m} \times \frac{in}{1} = \frac{7300}{2.54} \times 1 \times 1 \times in = 2{,}874in.$$

This was not difficult for us, because we know we have only multiplied 73 meters by 1, two times, which doesn't change its value at all. 73 meters are equal to 2,874 inches!

This is the way we will solve our problems. Are you beginning to feel the power of 1?

***Now we can start learning many things more easily from what we know, and we can do that our whole life long**.

Let's start with measurements.

2. MEASUREMENTS

2.1 The 200-Meter run at the Olympic Games corresponds to the 220-yard run in America. Which is longer, and how much?

A meter is equal to 39.37 inches. A yard is equal to 36 inches.

200 meters are $\frac{200m}{1} \times \frac{39.37in}{1m} = \frac{200 \times 39.37}{1 \times 1} \times \frac{m}{m} \times \frac{in}{1} = 7874 \times 1 \times in = 7874in.$

220 yards are $\frac{220yd}{1} \times \frac{36in}{1yd} = \frac{220 \times 36}{1 \times 1} \times \frac{yd}{yd} \times \frac{in}{1} = 7920 \times 1 \times in = 7920in.$

The 220-yard run is 7920 – 7874 = 46 inches longer than the 200-meter run.

2.2 A French cannon has a diameter of 75 millimeters. What is this diameter in inches?

10 millimeters are equal to one centimeter. 2.54 centimeters are equal to one inch.

75 millimeters are:

$$\frac{75mm}{1} \times \frac{1cm}{10mm} \times \frac{1in}{2.54cm} = \frac{75 \times 1 \times 1}{1 \times 10 \times 2.54} \times \frac{mm}{mm} \times \frac{cm}{cm} \times \frac{in}{1} = \frac{75}{2.54} \times 1 \times 1 \times \frac{in}{1} = 2.95in.$$

2.3 A train traveled form New York to Chicago (967 miles) in 20 hours. Find its average speed in miles per hour.

Per means divided by. Per also means “for each”, or “for every”. We want to find miles per hour, which, mathematically, means dividing miles by hours. The average speed of the train was $\frac{967miles}{20h} = 48.35\frac{miles}{h}$.

2.4 Try to name as many advantages of the metric system over the English system as you can.

All calculations in the metric system are based on groupings of 10, i.e. (10, 100, 1000, etc.) or fractions of ten, i.e. (1/10, 1/100, 1/1000, etc.). This is not true in the English system in which the relationship between two measurements of the same kind must be known (memorized) for each quantity being considered (16 oz. = 1 lb., 5280 ft = 1 mile, 1728 cubic inches = 1 cubic foot, etc.).

***Can you think of any disadvantages of using the metric system?**

2.5 What must you do to find the capacity in liters of a box when its length, breadth and depth are given in meters?

A liter is equal to 1000 cm^3 ($\frac{1L}{1000cm^3}$). A meter is equal to 100 centimeters ($\frac{1m}{100cm}$).

Measure the box in centimeters. Length x Breadth x Width = the volume of the box in cm^3. Multiply this answer by $\frac{1L}{1000cm^3}$ to find the volume of the box in liters.

Example:

$$100\text{cm x } 300 \text{ cm x } 500 \text{ cm} = 15{,}000{,}000 \text{ cm}^3 \times \frac{1\text{L}}{1000\text{cm}^3} = 15{,}000L.$$

2.6 Find the number of millimeters in 6 kilometers.

$$\frac{6km}{1} \times \frac{1000m}{1km} \times \frac{100cm}{1m} \times \frac{10mm}{1cm} = 6{,}000{,}000mm.$$

2.7 The first non-stop transatlantic flight from Newfoundland to Ireland, 1890 miles, lasted 15 hours and 57 minutes. How many miles per hour did the plane fly?

First we find out how many hours 57 minutes are.

$\frac{57 \text{ min}}{1} \times \frac{1h}{60 \text{ min}} = 0.95h$. The total time of the flight, then, was 15.95 hours.

The average speed in miles per hour is miles divided by hours ($\frac{miles}{hours}$).

$$\frac{1890miles}{15.95h} = 118.496 \frac{miles}{h}.$$

How many kilometers per hour did the plane fly?

One kilometer is equal to 0.62 miles. $\frac{118.495miles}{hour} \times \frac{1km}{0.62mile} = \frac{191.120km}{h}$.

2.8 Find the capacity of a box in liters that is 0.5 meters long, 20 cm wide, and 100 mm deep.

Length of box is $\frac{0.5m}{1} \times \frac{100cm}{m} = 50cm$.

Width of box is 20 cm.

Depth of box is $\frac{100mm}{1} \times \frac{1cm}{10mm} = 10cm$.

The volume of the box is

$$50\text{cm x } 20\text{cm x } 10\text{cm} = 50 \text{ x } 20 \text{ x } 10 \text{ cm x cm x cm} = 10000 \text{ cm}^3 \times \frac{1\text{L}}{1000\text{cm}^3} = 10L.$$

3. DENSITY AND SPECIFIC GRAVITY

Density is the mass (amount of material) contained in a volume (a space). It is measured in $\frac{gram}{cm^3}$.

***Water has a density of $\frac{1gram}{1cm^3}$.**

***Specific Gravity tells us how dense a material is compared to water.**

***The density of water in the English system is 62.3 pounds per cubic foot, $\frac{62.3lb}{1ft^3}$.**

3.1 A liter of milk weighs 1032 grams. What is its density?

1 liter is equal to 1000 cm^3.
The density of the milk is its mass divided by its volume.
$\frac{1032gm}{1000cm^3} = \frac{1.032gm}{1cm^3} = 1.032\frac{gm}{cm^3}$.

What is the specific gravity of the milk?

Specific gravity compares the density of a body with the density of water.

The density of water is $1\frac{gram}{cm^3}$.

The specific gravity of the milk is its density, $1.032\frac{gram}{cm^3}$ divided by the density of water, $1\frac{gram}{cm^3}$. The answer is 1.032. The specific gravity of the milk is 1.032.

This milk is 1.032 times *denser than water*.

***Specific Gravity tells us how dense a material is compared to water.**

***The density of water in the English system is 62.3 pounds per cubic foot, $\frac{62.3lb}{1ft^3}$.**

3.2 A ball of yarn was squeezed into ¼ of its original size. What effect did this produce upon its mass, its volume, and its density?

The mass of the yarn (how much yarn was there) did not change. The volume changed to become $\frac{1}{4}$ of its original volume ($\frac{Volume}{4}$). Its new density became $\frac{mass}{Volume/4}$. We can <u>get rid of the 4</u> in the denominator by multiplying the denominator by 4, but if we do that we will also have to multiply the numerator by 4 to keep from changing the value of the fraction. This is a conversion factor ($\frac{4}{4}$), so we won't change the value of the density, because we are only multiplying it by 1.

When we do this, we find that $\frac{mass}{\frac{volume}{4}} \times \frac{4}{4} = \frac{mass}{volume} \times 4 = 4 \times density$. The density has increased to four times the original density.

3.3 If a wooden beam is 30cm x 20cm x 500 cm. and has a mass of 150 kilograms, what is the density of the wood it is made of?

The beam has a volume of $30 \text{ cm. x } 20 \text{ cm. x } 500 \text{ cm.} = 300000 \text{ cm}^3$.

The beam has a weight of $150kg = \frac{150kg}{1} \times \frac{1000gm}{1kg} = 150{,}000gm$.

The beam has a density of $\frac{150{,}000gm}{300{,}000cm^3} = \frac{1gm}{2cm^3} = 0.5\frac{gm}{cm^3}$.

3.4 Would you try to carry home a block of gold equal to 8 liters in volume?

Gold has a density of $19.3\frac{gram}{cm^3}$. $Density = \frac{mass}{volume}$, so $mass = density \times Volume.$

Eight liters have a volume of $8L = \frac{8L}{1} \times \frac{1000cm^3}{1L} = 8000cm^3$.

The weight of the gold is given by its density multiplied by its volume, $\frac{19.3gram}{cm^3} \times \frac{8000cm^3}{1} = 154{,}000gm$.

$\frac{154{,}000gm}{1} \times \frac{1kg}{1000gm} = 154kg$.

One kilogram is 2 metric pounds, so the gold would weigh 308 metric pounds. One liter of gold would weigh $\frac{1}{8}$ of this, or about 39 metric pounds.

3.5 What is the mass of a liter of alcohol?

$Density = \frac{mass}{volume}$, so $mass = density \times Volume.$

The density of alcohol is $0.79\frac{gram}{cm^3}$.

The volume of alcohol is $\frac{1L}{1} \times \frac{1000cm^3}{1L} = 1000cm^3$.

The mass of the alcohol is therefore $\frac{0.79gram}{cm^3} \times \frac{1000cm^3}{1} = 790gm$.

3.6 How many cubic centimeters are in a block of brass weighing 45.5 kilograms? How many liters? How many quarts?

$Density = \frac{mass}{volume}$, so, $volume = \frac{mass}{density}$.

The mass of the brass is $\frac{45kg}{1} \times \frac{1000gm}{1kg} = 45{,}000gm$.

The density of one kind of brass is $\frac{8.5gram}{cm^3}$.

The volume of the brass is therefore 45000gm divided by $\frac{8.5gram}{cm^3}$ =

$\frac{45000gm}{1} \div \frac{8.5gm}{1cm^3} = \frac{45000gm}{1} \times \frac{1cm^3}{8.5gm} = 5353cm^3$.

The volume of the brass in liters is $\frac{5353cm^3}{1} \times \frac{1L}{1000cm^3} = 5.353L$.

***One liter is equal to 1.057 quarts. A liter is only 5.7% greater than a quart.**

The volume of the brass in quarts is $\frac{5.353L}{1} \times \frac{1.057Quart}{1L} = 5.658Quart$.

3.7 What is the weight in metric tons of a cube of lead that is 2 meters long on a side?

The volume of the cube is 200cm x 200cm x 200cm = 8,000,000 cm^3.

The density of lead is $\frac{11.3gm}{1cm^3}$. $Density = \frac{mass}{volume}$, so, $mass = volume \times density$.

The mass of the lead is $\frac{8{,}000{,}000cm^3}{1} \times \frac{11.3gm}{1cm^3} = 90{,}000400gm$.

There are 1000gm in a kilogram. $\frac{90{,}000{,}400\text{gm}}{1} \times \frac{1kg}{1000gm} = 90{,}000.4kg$.

There are 1000 kilograms in a metric ton. $\frac{90{,}000.4\text{kg}}{1} \times \frac{1t}{1000kg} = 90{,}4t_{metric}$.

***A metric ton is 1000 kg, or 2000 metric pounds.**
***A metric pound is 500 gm.**
***An American ton is 2000 American pounds.**
***A metric pound is 1.1 American pounds.**
***A metric ton is 2200 American pounds.**

3.8 Find the volume in liters of a block of platinum weighing 45.5 kilograms.

$Density = \frac{mass}{volume}$, so, $volume = \frac{mass}{density}$.

The mass of the platinum block in grams is $\frac{45.5kg}{1} \times \frac{1000gm}{1kg} = 45{,}500gm$.

***The density of platinum is 21.4 $\frac{gm}{cm^3}$.**

We know grams and want to know cm^3.

$\frac{gm}{1}$ x $\frac{cm^3}{gm}$ = cm^3. If the density of platinum is $\frac{21.4gm}{1cm^3}$, then it is also true that one cm^3 of platinum weighs 21.4 grams. We can write this as $\frac{1cm^3}{21.4gm}$.

The volume of the block of platinum is:

$$\frac{45{,}500gm}{1} \times \frac{1cm^3}{21.4gm} = \frac{2{,}126cm^3}{1} \times \frac{1L}{1000cm^3} = 2.126L.$$

***Two liters of platinum weigh about 214 pounds. Two quarts of platinum weigh about 200 pounds.**

***Platinum is more dense than gold. The density of gold is 19.3 $\frac{gm}{cm^3}$.**

3.9 One kilogram of alcohol is poured into a cylindrical container, and fills it to a depth of 8 centimeters. Find the cross-sectional area of the cylinder.

$Density = \frac{mass}{volume}$, so $volume = \frac{mass}{density}$. The density of the alcohol is $\frac{0.79gm}{1cm^3}$.

The volume of the alcohol is 1000gm divided by its density $\frac{0.79gm}{1cm^3}$.

To divide by the density, which is a fraction, we invert the density (turn it upside down) and multiply.

$$\frac{1000gm}{1} \div \frac{0.79gm}{1cm^3} = \frac{1000gm}{1} \times \frac{1cm^3}{0.79gm} = 1265.8cm^3.$$

The volume of the cylinder is its area times its height, and is equal to 1265.8 cm^3.

Area times 8 cm = 1265.8 cm^3, so the area is:

$$area \times 8cm = 1265.8cm^3 \Rightarrow area = \frac{1265.8cm^3}{8cm} = 158.2cm^2.$$

***We can use the weight and density of liquids to find the characteristics of containers.**

3.10 Find the length of a lead rod 1 cm in diameter which weighs 1 kg.

One kilogram is equal to 1000 grams.

The lead rod has a mass of $\frac{1kg}{1} \times \frac{1000gm}{1kg} = 1000gm$.

Lead has a density of $\frac{11.3gm}{cm^3}$.

$Density = \frac{mass}{volume}$, so $Volume = \frac{mass}{density}$.

The volume of this lead rod is 1000gm divided by $\frac{11.3gm}{cm^3}$. We invert the density and multiply.

$$\frac{1000gm}{1} \div \frac{11.3gm}{cm^3} = \frac{1000gm}{1} \times \frac{1cm^3}{11.3gm} = 88.5cm^3 .$$

The volume of the rod is its cross-sectional area multiplied by its length, and is equal to 88.5 cm^3.

The radius of the rod is $\frac{1}{2}$ cm, so its cross-sectional area is $\pi \times r^2 = \frac{3.1416}{4} cm^2$.

The volume of the rod is therefore

$$Volume = length \times area \Rightarrow length = \frac{volume}{area} = \frac{88.5cm^3}{\frac{3.1416cm^2}{4}} \times \frac{4}{4} = 112.6cm \times \frac{1in}{2.54cm} \cong 44.4in .$$

Some interesting and important information about the density of solids, liquids, and gasses follows.

***Density depends on temperature. In general, warmer things have a lower density than when they are colder. This is not always true, however.**

For example, this is not true of water, which has its greatest density as a liquid at +4 degrees centigrade, just 4 degrees centigrade before it freezes when the temperature is lowered to under 0 degrees centigrade; when water is cooled below +4 degrees centigrade, it begins to expand and become less dense. In the form of ice it is least dense.

***If a solid object is <u>less dense</u> than a liquid, it will <u>float</u>, being partly submerged in that liquid.**

***If a solid object is <u>denser</u> than a liquid, it will <u>sink</u> below the surface of that liquid.**

***If a liquid is <u>less dense</u> than another liquid, and the two liquids do not mix with another (we say that the two liquids are immiscible) the less dense liquid will <u>float</u> on top of the other liquid. Oil, for example, is less dense than water and will not mix well with water. Oil therefore floats on water.**

***gasses mixed at normal daily temperatures generally remain completely mixed. Their thermal energies (the high speeds with which they collide with another) keep the gasses mixed.**

***Two gasses are mixed in a closed container. If one gas is less dense than the other gas, and the temperature is <u>lowered so that the mixture becomes very cold</u>, the less dense gas will rise in the more dense gas.**

***Two gasses are mixed in a closed container. At room temperature, the gasses are completely mixed.**

One gas is denser than the other gas. If the temperature of the gasses is <u>lowered so that the mixture becomes very cold</u>, the denser gas will sink in the less dense gas.

***If gasses are mixed in a closed container, and the container is cooled enough, the gasses in the container will no longer stay completely mixed, the heaviest gas going toward the bottom of the container and the lighter gasses rising above them in layers inside of the container, according to their respective densities.**

***When a volcano leaks gasses sideways instead of projecting them upward, gasses that are denser than air can come out of the side of the volcano and flow down the slopes of the volcano, pushing the air out of their way as they descend the slope. This causes living animals and people in the area covered by these gasses to suffocate. Some of these gasses may otherwise be poisonous and endanger life. Chlorine, Fluorine, and Carbon Dioxide are all heavier than air.**

***When moist grain is stored in a silo, bacteria begins to ferment the grain, producing gasses that are denser than air, gasses like carbon dioxide and nitrogen oxide.**

If a man goes under the silo at or near the base of the silo, he can enter an area where there is not sufficient oxygen for him to live and where the gasses he breathes-in can cause acids to form in his lungs as these gasses come into contact with the water in his lungs.

These gasses cannot be seen, tasted, or smelled, so the man does not notice that he is in a life endangering situation. Extra warning is necessary to protect him.

4. THE PRINCIPLE OF ARCHIMEDES

If we carry a large stone from the ground into a river or the sea, we notice that the stone is easier to carry, once it has gone under the water.

If we carry a heavy piece of wood from the ground into a river or the sea, we notice that we do not have to lift the wood any more once it has gone into the water and begins to float on the water.

The stone when going below the water pushed the water out of its way. The volume of water the stone pushed out of its way is equal to the volume of the stone. If we measure how much easier it is to carry the stone under water, we find that the weight of the stone was reduced by exactly the weight of the volume of water that the stone pushed out of its way.

*** The man who first realized this was Archimedes.**

***We call the amount of water that was pushed out of its way the "amount of displaced water".**

If we measure the weight of water displaced by the heavy piece of wood after the wood begins to float on the water, we find that the weight of the "amount of water displaced by the wood" is exactly equal to the weight of the heavy piece of wood.

Water is heavy.

***One cubic meter of water weighs 1000 kg.**

***One cubic foot of water weighs about 62.3 American pounds.**

4.1 Does the weight apparently lost by a submerged body depend upon its volume or its weight?

Only upon its volume, because the apparent loss of weight is equal to the weight of the liquid displaced, which is caused only by the volume of the submerged body.

4.2 A brick appeared to lose 1 lb. when it was submerged in a liquid 1 ft. deep; how much would it lose if suspended under the liquid 3 ft. deep?

The brick would still appear to lose 1 lb., because the density of the liquid did not change; the apparent loss of weight is equal to the volume of the brick, cm^3, multiplied by the density of the liquid $\frac{gm}{cm^3}$.

$$\frac{cm3}{1} \times \frac{gm}{cm^3} = gm .$$

How deep the brick is in the liquid does not matter; It must only be somewhere completely beneath the surface of the liquid.

4.3 Will a boat rise or sink deeper in the water as it passes from a river to the ocean?

***The density of sea water (salt water) is about $\frac{1.026gm}{cm^3}$.**

***The density of river water (fresh water) is about $\frac{1gm}{cm^3}$.**

The weight of the boat is equal to the density of the liquid it is floating in multiplied by the volume of the liquid the boat displaces.

If the density of the liquid that the boat is floating in changes, the volume of liquid the boat displaces must change in the opposite direction, because the weight of the boat remains the same.

If the density of the liquid goes up, the volume displaced by the boat must go down (when this happens, the boat is forced higher above the surface of the liquid).

If the density of the liquid goes down, the volume displaced by the boat must go up (this happens when the boat lowers in the liquid).

The boat rises as it passes from a river to the ocean. The boat sinks deeper into the water as it passes from the ocean into a fresh water river.

***When a ship goes from a river into the ocean, the density of the liquid it is floating in increases. The volume of the new liquid displaced by the ship must therefore become less if the weight of the ship is to remain the same. This means that the ship rises higher in the denser salt water (the water displaced by the ship becomes less) , and the higher density of the salt water multiplied by the reduced volume of salt water displaced by the ship remains equal to the weight of the ship.**

4.4 A fish lies perfectly still near the center of an aquarium. What is the average density of the fish?

The volume of the water displaced by the fish is equal to the volume of the fish.

The fish does not move, so its weight must be exactly equal to the weight of water it displaces.

The displaced water and the fish have the same volume.

The displaced water and the fish have the same weight.

Since density is equal to weight divided by volume, the displaced water and the fish have the same density.

***A submarine lies perfectly still, submerged at the center of the ocean; what is its average density?**

4.5 Where do the larger numbers appear on hydrometers?

Well, what is a hydrometer?

A hydrometer is a measuring device that measures the density of liquids. It floats upright in the liquid and has a stem that is oriented upward and is above the surface when it is floating in a liquid. If a liquid is denser, the hydrometer rises in the liquid. If a liquid is less dense, the hydrometer falls in the liquid.

The hydrometer is read by looking at the place on the stem where the surface level of the liquid it is floating in crosses its stem.

For denser liquids (higher numbers), this level is lower on the stem.

For less dense liquids (lower numbers), this level is higher on the stem.

The higher numbers are therefore at the lower positions on the stem, and the lower numbers are at the higher positions on the stem.

Earlier, we learned what the specific gravity of a solid body is.

***Specific Gravity of a Body =** $\dfrac{weight\_of\_the\_body}{weight\_of\_water\_displaced\_by\_the\_body}$**.**

4.6 A 150 lb_{metric} man can just float. What is his volume?

Because the man is <u>just</u> floating, his body displaces a volume of water that is equal to his body weight. His body weight is 150 lb.

Each metric pound is equal to 500 gm, so his body weight in grams is:

$\dfrac{150lb}{1} \times \dfrac{500gm}{lb} = 75000gm$.

$Density = \dfrac{mass}{volume}$, so, $Volume = \dfrac{mass}{density}$. The volume of the water that the man displaces is the mass of the water displaced, 75000gm, divided by the density of water $\dfrac{1gm}{1cm^3}$.

Dividing by the density is the same as inverting the density and multiplying by the inverted density.

$75000gm \div \dfrac{1gm}{1cm^3} = \dfrac{75000gm}{1} \times \dfrac{1cm^3}{1gm} = 750000cm^3$.

$\dfrac{75000\text{ cm}^3}{1} \times \dfrac{1L}{1000cm^3} = 75L$. The volume of the man is equal to the volume of the water he is displacing, so the volume of the man is also 75 liters.

4.7 Explain how you would find the specific gravity of an irregular solid that will sink in water.

Weigh the solid in air and then weigh the solid in water. The difference between these two weights is the apparent loss of weight of the solid body in water.

The specific gravity of the solid body is then given by dividing the weight in air of the body by the apparent loss of weight of the body in water= $\dfrac{weight\_in\_air}{loss\_of\_weight\_in\_water}$

4.8 Now we want to learn how to find the specific gravity of a liquid.

We need to learn what the specific gravity of a liquid is.

Specific Gravity of a Liquid = $\dfrac{loss\_of\_weight\_of\_a\_body\_in\_the\_liquid}{loss\_of\_weight\_of\_the\_same\_body\_in\_water}$.

A body loses 25 gm in water, 23 gm in oil, and 20 gm in alcohol. What is the specific gravity of the oil? What is the specific gravity of the alcohol?

The specific gravity of the oil is $\dfrac{loss\_of\_weight\_in\_oil}{loss\_of\_weight\_in\_water} = \dfrac{23}{25} = 0.92$

The oil is only 92% as heavy as the same volume of water.

The specific gravity of the alcohol is $\frac{loss\_of\_weight\_in\_alcohol}{loss\_of\_weight\_in\_water} = \frac{20}{25} = 0.8$.

The alcohol is only 80% as heavy as the same volume of water.

***It is often difficult to find the loss of weight of a body in a liquid.**

***We could also weigh one liter of any liquid and find its weight in grams.**

One liter contains 1000 cubic centimeters. So, the density of the liquid is this weight divided by 1000 cm^3

***We could also weigh 50 cm^3 of any liquid and find its weight in grams, and divide this weight by 50 cm^3 to find the density of the liquid.**

***The specific gravity of any liquid is the pure number of its density.**

4.9 A platinum ball weighs 330 gm in air, 315 gm in water, and 303 gm in sulphuric acid. Find the volume of the ball, and the specific gravity of the sulphuric acid. Find the specific gravity of the platinum ball.

The loss of weight of the platinum ball in water is 330 – 315 = 15 gm. The volume of water that the ball displaced weighs 15 gm. Because water weighs 1 gram for each cubic centimeter, the volume of water displaced was 15 cm^3. This is equal to the volume of the ball.

The volume of the ball is 15 cm^3.

The specific gravity of the sulphuric acid is:

$$\frac{loss\_of\_weight\_in\_sulpheric\_acid}{loss\_of\_weight\_in\_water} = \frac{27}{15} = 1.8$$

The specific gravity of the platinum ball is $\frac{weight\_in\_air}{loss\_of\_weight\_in\_water} = \frac{330}{15} = 22$.

4.10 A piece of paraffin weighs 178 grams in air and a sinker weighs 30 grams in water. Both together weigh 8 grams in water. Find the specific gravity of the paraffin.

The sinker in water and the paraffin in air tied together weigh 30 + 178 = 208 grams.

The sinker in water and the paraffin in water tied together weigh 8 grams. The paraffin must be <u>*completely*</u> under water if a weight of eight grams can still be measured. If the paraffin were floating, no weight could be measured.

The difference in weight between these two weights is 208gm – 8gm = 200 gm.

The volume of the paraffin alone displaced enough water to account for a weight difference of 200 gm., because the sinker was already under water and weighed 30 grams.

The weight of the displaced water is 200 gm.

The volume of the displaced water is 200 cm^3.

The volume of the paraffin is 200 cm^3.

The density of the paraffin is $\frac{weight\_in\_gm}{volume\_in\_cubic\_centimetres} = \frac{178}{200} = 0.89\frac{gm}{cm^3}$.

The specific gravity of the paraffin is 0.89.

4.11 A cube of iron 10 cm on a side weighs 7,500 gm. How much will it weigh if it is submerged in alcohol of density 0.82gm/cm³?

The volume of the iron is $10cm \times 10cm \times 10cm = 1000cm^3$. The iron will displace 1000 cm^3 when it is submerged in the alcohol.

The weight of the displaced alcohol is $\frac{1000cm^3}{1} \times \frac{0.82gm}{cm^3} = 820gm$. The displaced alcohol "lifts the iron" with a force of 820 gm.

The weight of the iron in the alcohol is therefore $7500gm - 820gm = 6{,}680gm$.

4.12 What fraction of a block of wood will float above water if its specific gravity is 0.5? 0.6? 0.9?

At 0.5 the density of wood is only half that of water, which is 1. So, 1cm^3 of the wood only weighs ½ gram and will displace only ½ cubic centimeter of water. This means that only ½ cubic centimeter of wood will be below the surface of the water. The other ½ cm^3 of the wood will extend above the water.

For a specific gravity of 0.5, 50% of the wood will be in the water and 50% above.

For a specific gravity of 0.6, 60% of the wood will be in the water and 40% above.

For a specific gravity of 0.9, 90% of the wood will be in the water and 10% above.

*** The specific gravity or the density of a body <u>floating</u> in water gives the percentage of the body that is below the surface of the water, the remainder being above the water.**

4.13 If a "rectangular iceberg" rises100 ft. above water, how far does it extend below the water (assume that the density of the ice is 0.9 that of sea water).

The specific gravity of the floating ice is 0.9. 90% will be below the water and 10% will be above the water. If 10% above the water is 100ft, then 900 ft must be the 90% below the surface of the water.

***About 90% of the ice in each iceberg is below the surface of the seawater. We only see about 10% of it.**

4.14 A barge 30 ft x 15 ft sank 4 inches (1/3 ft) when an elephant was taken on board. What was the elephant's weight?

The volume of the displaced water was $\frac{30\,ft}{1} \times \frac{15\,ft}{1} \times \frac{1\,ft}{3} = 150\,ft^3{}_{water}$.

$1\,ft = \frac{1\,ft}{1} \times \frac{12in}{1\,ft} \times \frac{2.54cm}{1in} = 30.48cm$. 1$ft^3$ is therefore equal to 28,316cm^3.

This is 28.316 liters of water which weigh: $\frac{28.316L_{water}}{1} \times \frac{1kg}{L_{water}} = 28.316kg$.

150 ft^3 of water weigh 150 times this much, or 150 x 28.316kg = 4,247.4kg.

1000kg = 1 metric ton. $\frac{4247kg}{1} \times \frac{1t_{metric}}{1000kg} = 4.247t_{metric}$.

***One metric ton is equal to 1.1 American tons.**

$$\frac{4.247t_{metric}}{1} \times \frac{1.1t_{Amer.}}{1t_{metric}} = 4.67t_{Amer.}$$

***We see that it is the heavy weight of water that allows barges and large ships to carry such heavy loads.**

4.15 A cubic ft of stone weighed 110 American lb in water. What is its specific gravity?

The stone lost the weight of 1 ft^3 of water, which weighs 62.3 American pounds.

The weight of the stone in air is therefore 110 lb + 62.3 lb, or about 172 American lb.

The volume of the stone is 1ft^3, which is equal to 28,316cm^3.

The weight of the stone is:

$$\frac{172lb_{Amer.}}{1} \times \frac{1lb_{metric}}{1.1lb_{Amer.}} \times \frac{500gm}{1lb_{metric}} = 78{,}181gm .$$

The density of the stone is $\frac{78{,}181gm}{28{,}316cm3} = 2.76\frac{gm}{cm^3}$.

The specific gravity of the stone is 2.76.

4.16 Steel is three times as heavy as aluminum. When equal volumes of each are submerged in water, how do their apparent losses of weight compare?

Each metal displaces the same volume of water. The apparent loss of weight in water is equal to the weight of the volume of water displaced.

The apparent loss of weight for each metal is the same.

4.17 The density of cork is 0.25 gm/cm^3. What force is required to push one cm^3 of cork beneath the surface of water?

The cork displaces 1 cm^3 of water, which weighs 1 gm and pushes upward on the cork.

A force of 1 gm is therefore required to push the cork beneath the surface of the water.

The cork already weighs ¼gm, so an addition ¾gm is required to push the cork completely beneath the surface of the water.

4.18 A block of wood 15 cm x 10 cm x 4 cm = 600 cm^3 floats in water with 1 cm in the air. Find the weight of the block and its specific gravity.

The weight of the block is equal to the weight of the water displaced.
The volume of the water displaced is: $15cm \times 10cm \times 3cm = 450cm^3$, which weighs $\frac{450cm3}{1} \times \frac{1gm}{cm^3} = 450gm$.

The block has a density of $\frac{450gm}{600cm^3} = 0.75\frac{gm}{cm^3}$.

The specific gravity of the block is 0.75

4.19 The specific gravity of milk is 1.032. How is its specific gravity affected by removing part of the cream?

The cream is the lightest part of the milk. Removing cream from the milk leaves the milk as a more dense mixture. The specific gravity of the milk increases. By adding water which has a density less than milk to the milk, the mixture becomes less dense, and the density of the milk decreases again.

***Cream can be removed from the milk and afterward water added to the milk so that the original specific gravity of 1.032 is re-established.**

4.20 A piece of sandstone having a specific gravity of 2.6 weighs 480 grams in water. Find its weight in air.

Let's call the weight of the stone in air A. The weight of the stone in air minus the apparent loss of weight in water is equal to 480 grams.

A - Loss of weight in water = 480gm.

So, the Loss of weight in water is equal to the weight in air minus 480 grams.

Loss of weight in water = A – 480gm.

The specific gravity = $\frac{weight\_in\_air}{loss\_of\_weight\_in\_water}$.

$2.6 = \frac{A}{A-480}$.

$2.6 \times (A-480) = A$.

$2.6A - 1248 = A$.

$1.6A = 1248$.

$A = 780gm$.

The weight of the stone in air is 780gm.

4.21 The density of a stone is about 2.5. If a boy can lift 120 lb, how heavy a stone can he lift to the surface of a pond?

The boy can lift the weight of the stone in air minus the loss of weight in water.

The weight of the stone in air minus the loss of weight in water = 120 lb.

The loss of the weight in water = the weight of the stone in air – 120 lb.

The specific gravity = $\frac{weight\_in\_air}{loss\_of\_weight\_in\_water}$.

If we call A the weight of the stone in air, our formula reads:

$2.5 = \frac{A}{A-120}$.

$2.5 \times (A - 120) = A$.

$2.5A - 300 = A$.

$1.5A = 300$.

$A = 200lb$.

The weight of the stone in air is 200 lb.

4.22 The hull of a battleship is made almost entirely of steel, its walls being of steel plates from 6 to 18 inches thick. Explain how it can float.

The steel must be formed so that it encloses a waterproof volume inside of the ship.

The enclosed form, when filled with water, must hold water that weighs more than the materials used to make the form.

Stated differently, the weight of water that the steel form can displace must weigh more than the steel form itself.

5. BAROMETRIC PHENOMENA

We live at the bottom of an ocean of air. We call this ocean of air our atmosphere. The atmosphere, like an ocean of water, causes great pressures to be formed within it. Because we live at the bottom of the ocean of air, we are exposed to the greatest average pressures it can cause. Like the pressures in the oceans of water, which are changing constantly by the waves the wind produces on their surfaces, and water currents within them, and the different quantities of heat they are receiving from the magma in the earth, the pressure caused by our atmosphere does not remain the same, but is also continually changing.

A barometer is a measuring device that measures atmospheric pressure. The concept **Barometric phenomena** therefore relates to the pressures and forces occurring in our atmosphere, and explanations of how and why they occur.

***the average value of the barometric pressure, measured at the level of our sea waters, is about 14.7 $\frac{lb}{in^2}$, which is about equal to $\frac{1000g}{cm^2}$.**

5.1 If a glass is completely or partially filled with water, and a piece of writing paper is placed over the top, the glass can be inverted (turned upside down) without spilling the water. Why?

When the glass is turned upside down, with your hand supporting the piece of writing paper, the paper causes the lower surface of the water to be formed as a flat plane. If the water in the glass is 5 cm deep, the <u>water</u> will push down on every cm^2 of the writing paper with a force of 5 gm, because each cm^3 of water weighs 1 gm. The downward acting pressure caused by gravity is, then, $\frac{5gm}{cm^2}$ on the upper surface of the writing paper.

A force caused by atmospheric pressure of approximately 1000 gm pushes upward on every cm^2 of the bottom surface of the writing paper from outside of the glass. Atmospheric pressure is $\frac{1000gm}{cm^2}$.

This force caused by atmospheric pressure that is pushing the water upward is equal to the force of the air at atmospheric pressure above the water in the glass, which is pushing the water downward with an equal force of approximately 1000 gm on every cm^2 from inside of the glass.

The upward and downward forces caused by atmospheric pressure on the writing paper are opposite and equal, and their net effect is therefore a force of 0 gm acting on each cm^2 of the writing paper. Because their sum force is zero, they can not cause the water in the glass to move.

However, there is still the force exerted on the water in the glass by gravity, which causes the water to move downward with a force of 5 gm on every cm^2 at the level of the writing paper (the lower surface of the water).

What stops the weight of the water in the glass from pushing the water and writing paper downward away from and out of the glass, then?

Carefully move your hand downward away from the writing paper. The water begins to move downward in the inverted glass caused by the weight of the water in the glass.

This movement of water downward in the glass, however, immediately causes the air volume above the water inside of the glass to grow *larger*.

This larger growing air volume above the water inside of the glass causes the air pressure above the water to become *less than* 1000 gm acting downward on every cm^2 of the waters surface from inside of the glass.

The atmospheric force pushing the downward surface of the writing paper upward (from outside of the glass) *has not changed*. It is equal to about 1000 gm acting upward on every cm^2 from outside of the glass.

This difference of atmospheric forces is no longer zero, and begins to point upward. This happens because the upward force caused by atmospheric pressure acting on the lower surface of the writing paper from outside of the glass *does not change*, while the downward force acting on the upper surface of the writing paper is continually becoming *less*.

The water continues to move downward inside the glass until the difference between the upward and downward atmospheric forces (which points upward) is <u>just equal to</u> the force caused by the weight of the water pushing downward on the writing paper.

When this balanced condition is reached, the water inside of the glass is no longer affected by any force. It therefore stops moving downward and becomes stable at this position inside of the glass.

The water stays in the glass.

***This gives us an idea of, or a feeling for, the great precision in the laws of nature, and of the world we are living in.**

5.2 How could you build a barometer?

We could take a glass tube about 85 cm long that is sealed at one end, and fill it completely with mercury. We could hold the open end of the tube with nothing but mercury in it closed and place it in a small dish of mercury below the surface of the mercury in the dish. When the closed end of the tube is pointing upward, and we open the open end of the tube under the surface of the mercury in the dish, we notice that the mercury in the tube falls a distance from the top of the tube.

We have just built a barometer; and the barometer is measuring the air pressure at the place we are standing! The atmospheric pressure is shown by the distance the mercury in the tube is standing above the surface of the mercury in the dish.

***The man who first did this was an Italian, named Torricelli, and this kind of barometer is called a "Torricelli Barometer", named after him.**

How does the Torricelli Barometer work?

The height of the mercury inside of the tube is completely determined by the atmospheric pressure outside of the tube. When the atmospheric pressure is high, the column of mercury in the glass tube is pushed high. When the atmospheric pressure is low, the column of mercury in the glass tube is no longer pushed as high.

***At sea level on a "normal" day, close to 76 cm of mercury is the height of the mercury column in the tube. We say that the atmospheric pressure is**

"normal". 72 cm indicates a very low atmospheric pressure area where the barometer is located (bad weather), and 80 cm indicates a very high atmospheric pressure area where the barometer is located (good weather).

5.3 If a small quantity of air should get into the space at the top of the mercury column of a Torricelli barometer, how would it affect the readings? Why?

This air would increase the air pressure above the mercury column in the closed end of the glass tube, pushing the mercury downward. This movement of the mercury column, downward, corresponds to a fall in atmospheric pressure. Therefore, the air that entered the closed end of the barometer caused a reading that is *less than* the real atmospheric pressure at that time and place.

5.4 Would the pressure of the atmosphere hold mercury as high in a tube as large as your wrist as in one having the diameter of your finger? Explain.

Yes. Think of your finger as having a cross-sectional area of one cm^2. Air pressure of the atmosphere would cause a force of 1000 gm to push this finger large column of mercury upward. This is true for every cm^2 of cross-sectional area for any larger diameter tube. Think of the larger tube as a collection of several smaller finger-like tubes, each of them having a cross-sectional area of one cm^2 that is being pushed upward by a 1000 gm force caused by atmospheric pressure. The mercury reaches the same height, regardless of how large the tube is.

***Of course, a tube with a very small inside diameter will still give the same reading, and building it would require much less mercury, and would not cost as much to build.**

5.5 Calculate the number of tons of atmospheric *force* on the roof of an apartment house that is 50 ft wide and 100 ft long. Why does the roof not cave in?

We can find the atmospheric force by multiplying the atmospheric pressure by an area. We need to know the area of the roof. The area of the roof is:

50ft X 100 ft = 5000ft^2.

There are 144 in^2 in 1 ft^2.

$$\frac{5000\,ft^2}{1} \times \frac{144in^2}{1\,ft^2} = 720000in^2.$$

Atmospheric pressure on a "normal" day is about $\frac{15lb}{in^2}$.

Force = Pressure x Area.

The atmospheric force acting on the roof is: $\frac{15lb}{in^2} \times \frac{720000in^2}{1} = 10{,}800{,}000lb.$

One ton is equal to 2000 pounds.

$$\frac{10800000lb}{1} \times \frac{1ton}{2000lb} = 5{,}400tons.$$

***Pressure always acts in all directions equally, when it is measured at a single location.**

Atmospheric pressure acts on the top of the roof, pushing the roof downward, as well as on the bottom of the roof, pushing the roof upward. These two forces are equal and opposite in direction. Their net effect is a zero force acting on the roof in the up/down directions. Only the weight of the roof caused by gravity pulls the roof downward.

The edges of the roof are also affected by the atmospheric pressure, the left side force pushing against the right side force of every piece in the roof, the front side force pushing against the backside force of every piece in the roof. We say that the great forces acting on the roof cancel each other, meaning that they all add up to a zero force, and the roof remains stationary.

***These same great forces are acting outside of us and inside of us. These are very strong forces, but we do not notice them.**

***Atmospheric pressure is caused by the weight of the air above us.**

It is surprising to find that the weight of 1 cubic meter of air is 1.293 kilograms!

5.6 Measure the dimensions of a room in feet and calculate the number of pounds of air in the room.

***12 ft^3 of air weigh one American pound, $\frac{12\,ft^3}{lb}$.**

* 1 liter of air weighs 1.293 grams, $\frac{1L}{1.293gm}$

Suppose we measured the room to be 15 ft wide and 30 ft long and 10 ft high.

The volume of the room is 15ft X 30 ft X 10 ft = 4500 ft^3.

The weight of the air in this room weighs $\frac{4500\,ft^3}{1} \times \frac{1lb}{12\,ft^3} = 375lb$.

5.6 A spaceship was made to fly in a curve to allow the astronauts inside to experience “weightlessness”. The astronauts had a balloon filled with helium gas onboard. The balloon fell to the floor of the spaceship during weightlessness. Why?

As the spaceship flew into the curve, everything inside of it was affected by a centrifugal force that was slightly greater than and opposed to the force of gravity. The air inside of the spaceship was pressed lightly against the ceiling of the spaceship by the difference between the centrifugal force and gravity as the astronauts became “weightless”. At this time the air inside of the spaceship became denser at the ceiling than at the floor. The balloon of helium moved as it always does; it moved from a position of greater air density to a position of lesser air density.

The balloon moved from the ceiling toward the floor.

5.7 What is a vacuum, and what does it cause?

A vacuum is the absence of all materials inside of a closed volume (space).

If we remove all of the gas molecules from a bottle, we say that we have created a perfect vacuum inside the bottle.

It is impossible to remove every single atom or molecule inside of a defined space to make a perfect vacuum there. The vacuums that we can make are partial vacuums; they can be very high vacuums, but never perfect vacuums.

***A perfect vacuum is not attainable.**

If we have a hollow steel ball and cut it exactly in half, we could place the two halves together again and use a vacuum pump and an air seal between the two halves to remove the air from the inside of the steel ball.

If we pump almost all of the air out of the inside of the ball, when we try to pull the two halves apart again, we find that we can, but the force with which we have to pull is very great.

If we measure the force we need to pull the two halves of the ball apart, we find that it is the same as the cross-sectional area of the ball multiplied by the barometric pressure at the time and place we were pulling the two halves apart.

The first time this was done was in Magdeburg, Germany, and the man who did it was the Mayor of Magdeburg, Otto von Guericke.

5.8 Von Guericke's hollow sphere had an interior diameter of 22 inches. What force in pounds was required to pull them apart?

The cross-sectional area of the inside of the sphere is Π X R^2.

Area of Circle = Π X R^2 = 3.14159 X 11^2 = 3.14159 X 121 = 380 in^2.

If the barometric pressure was $\frac{15lb}{in^2}$, the force holding the two halves of the sphere together was the cross-sectional area of the sphere multiplied by the barometric pressure.

$$\frac{380in^2}{1} \times \frac{15lb}{in^2} = 5{,}700lb.$$

6. THE COMPRESSIBILITY OF LIQUIDS

It has been found by carefully devised experiments that very great compressing forces produce only a small effect when we try to compress liquids.

For example, when 1 cm3 of water is compressed using a pressure of $\frac{3{,}000{,}000\,gm}{cm^2}$, the water can only be compressed to 0.9 cm^3, or about 90% of its original volume.

$$\frac{3{,}000{,}000\,gm}{cm^2} \times \frac{1\,kg}{1000\,gm} \times \frac{1\,t_{metric}}{1000\,kg} = \frac{3\,t_{metric}}{cm^2}.$$

This is a very great pressure. We almost always work with pressures very small compared to this pressure, and the amount of compression of the water or other liquids is so small that we can not measure it, or we can neglect it.

We say that liquids are practically non-compressible for this reason, knowing however that they can be slightly compressed using enormous pressures.

7. THE COMPRESSIBILITY OF AIR

7.1 The deepest measurement by sounding in the ocean is about 6 miles. Find the pressure at this depth.

The specific gravity of sea water is 1.026. The density of sea water is $1.026\frac{gm}{cm^3}$.

The pressure is equal to the depth in the sea water in centimeters multiplied by the density of the sea water.

The depth is $\frac{6mile}{1}\times\frac{5280\,ft}{1mile}\times\frac{12in}{1\,ft}\times\frac{2.54cm}{1in}=965{,}606cm.$

$$\frac{965606cm}{1}\times\frac{1.026gm}{1cm^3}=\frac{990712gm}{cm^2}.$$

$$\frac{990712gm}{cm^2}\times\frac{1kg}{1000gm}=\frac{990.712kg}{cm^2}.$$

This is almost a metric ton (1000 kg) force acting on each square centimeter of area, a tremendous crushing pressure.

7.2 What sort of a change in volume do the bubbles of air which escape from a sea diver's suit experience as they rise to the surface of the water?

The water pressure is greatest at the greatest depth. Rising toward the surface of the water from any depth, the pressure caused by the water on the air bubbles becomes less. The bubbles are more compressed near the diver, and become less compressed as they rise toward the surface of the water. The volume of the bubbles therefore increases as they rise toward the surface of the water.

7.3 Why does mountain climbing often cause pain and bleeding in the ears and the nose?

The air pressure outside of our cells becomes less as we climb higher. It takes time for our cells to change the higher air pressure inside of them to become equal to the outside air pressure. Air has to first cross over the cell membranes and then escape through the circulatory system and the lungs, and this takes time. If the difference between the inside and outside pressures acting on our cells becomes too great, they rupture, and bleeding occurs that is noticed in the ears and the nose.

7.4 In the picture shown, what would happen if you blew air very hard into the bottle partly filled with water through the tube, and then removed your mouth from the tube. Why?

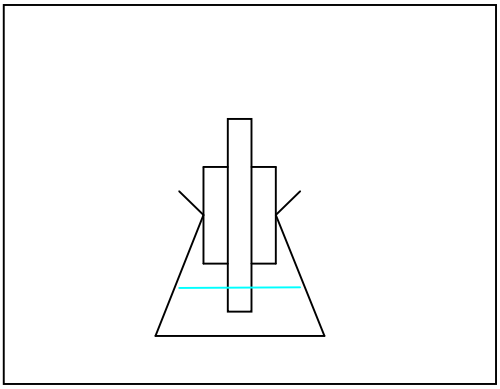

The tube is put into the bottle using a stopper. When blowing air through the tube, air pressure above the water in the tube is increased above the air pressure inside of the bottle.

A greater force is therefore pushing down on the column of water in the tube from the top of the tube than air pressure in the bottle is pushing up on the column of water in the tube from the bottom of the tube.

The sum of these two forces is a force directed downward on the column of water in the tube.

The column of water in the tube moves downward until its upper surface reaches the lower end of the tube.

At this time air enters the bottle through the tube and the air pressure inside the bottle becomes higher until it becomes equal to the air pressure being blown into it by the mouth.

The mouth is removed from the upper end of the tube.

A greater air pressure now causes a force to push upward on the water in the tube from inside the bottle than atmospheric pressure causes a force to push downward on the water at the upper end of the tube from inside the tube.

The sum of these two forces is a force directed upward on the water in the tube.

The water now begins to move upward and squirt out of the bottle, and this flow of water continues until the water in the bottle has been lowered to the same level as the lower end of the tube.

When this happens, the air in the bottle can escape from inside the bottle through the tube to the outside air, and the air pressure inside of the bottle decreases until it becomes the same as the atmospheric pressure outside of the bottle. At this time the air flow out of the bottle stops.

The new level of the water inside of the bottle is now just below the lower opening of the tube.

7.5 If a bottle or cylinder is filled with water and inverted in a dish of water, with its mouth beneath the surface, the water will not run out. Why?

The force of gravity acting on the water moves the water downward.
If the cylinder full of water is 10 cm long, the pressure caused by gravity acting on the water <u>at the mouth</u> of the cylinder is $\frac{10gm}{cm^2}$, which pushes the water in the cylinder downward.

The atmospheric pressure acts on the water (about $\frac{1000gm}{cm^2}$), which pushes the water in the cylinder upward. This pressure pushing upward is 100 times as strong as the pressure caused by gravity pushing the water in the cylinder downward, so the water stays in the cylinder.

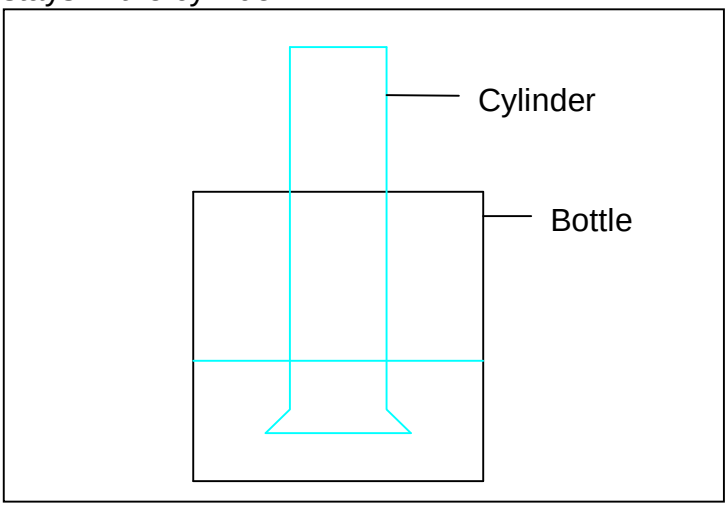

7.6 If a bent rubber tube is inserted beneath the mouth of the cylinder and air is blown in, it will rise to the top of the cylinder and displace the water. Explain why.

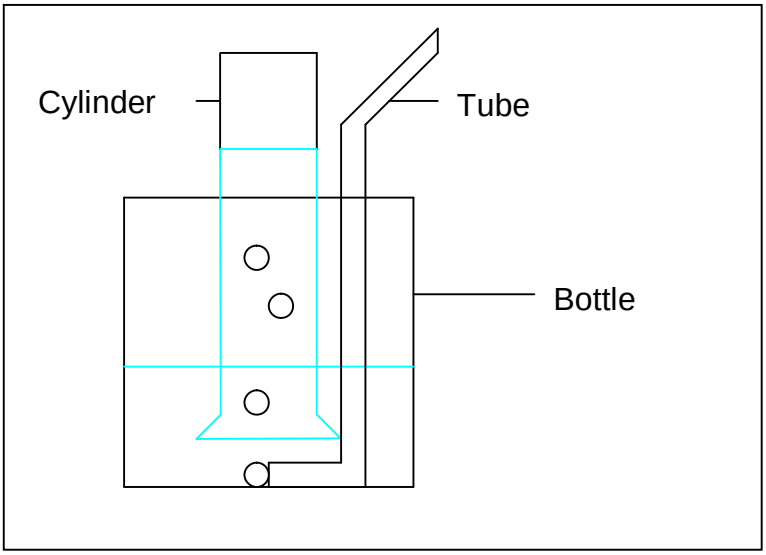

This is the method regularly used to collect gasses. Before the gas rises, the forces acting on the water in the cylinder are as explained in problem 7.5.

When gas is blown through the rubber tube, it escapes at its end forming bubbles, and atmospheric and water pressures exert an upward force on the bubbles formed, which causes them to collect at the top of the cylinder.

The gas being collected causes a pressure to form above the water in the cylinder, which acts on the upper surface area of the water in the cylinder to form a downward force on the water in the cylinder. This pressure adds to the water pressure caused by the weight of the column of water in the cylinder. When the sum of these two pressures becomes greater than atmospheric pressure acting on the water from outside of the bottle, the water in the cylinder begins to move downward.

The water traps the gas being collected in the upward portion of the cylinder.

7.7 Why must the stopper in a cider barrel be removed before the cider will flow properly from its faucet?

Read problem 5.1 again. The cider in the barrel acts similar to the water in the glass in problem 5.1. The surface of the cider is not exactly plane at the faucet, however, and cider dribbles out of the barrel when small bubbles of air enter there.

Opening the stopper at the top of the barrel allows air to be pushed into the barrel by atmospheric pressure, which then increases the downward pressure acting on the upper surface of the cider in the barrel to atmospheric pressure, about $\frac{1000gm}{cm^2}$. This is the same as atmospheric pressure acting upward on the cider surface in the barrel from the lower end of the faucet, which is also about $\frac{1000gm}{cm^2}$. The upper and lower atmospheric pressures are equal, and add together to form a zero pressure acting on the cider. They can not cause the cider to flow.

The cider now flows out of the barrel because of the downward force of gravity acting on the liquid cider.

7.8 When a bottle of water is inverted, the water will gurgle out of the bottle instead of pouring in a steady stream. Why?

In problem 5.1, we controlled the bottom surface of the water in such a way that no bubble of air could enter at the lower surface of the water in the inverted glass and then rise to the surface of the water inside of the glass. We covered the lower surface of the water with a piece of writing paper to do this.

When a bottle is inverted without this control, air enters at the lower surface of the water due to atmospheric pressure and forms bubbles that rise through the water to the top surface of the water, where they increase the pressure above the water. When this pressure plus the weight of the water added together become greater than Atmospheric pressure the water begins to flow out of the bottle.

As the water moves downward, the volume of air above the water in the bottle increases; this action reduces the air pressure acting on the upper surface of the water. As this pressure plus the weight of the water together become less than Atmospheric pressure, the water stops flowing out of the bottle.

Quickly, other bubbles of water rise from the bottom of the bottle through the water to the top surface of the water again, where they increase pressure above the water in the bottle a second time. The water rushes out again and shortly afterward stops flowing again.

This action occurs repeatedly until all water has flown out of the bottle. All of these events in time cause the familiar gurgling of water rushing out of the bottle.

***Things that appear to be simple to us can be quite complicated. The world we live in is not simple.**

7.9 If 100 ft^3 of hydrogen gas at normal pressure (1atmosphere) are forced into a steel tank having a capacity of 5 ft^3, what is the gas pressure in the tank expressed in $\frac{lb}{in^2}$?

Let us name the <u>beginning</u> pressure and volume of the hydrogen gas when it is at atmospheric pressure P_1 and V_1.

Let us name the <u>ending</u> pressure and volume of the hydrogen gas when it is compressed in the steel tank P_2 and V_2.

***Very carefully conducted experiments have shown us that the following natural law is true for the beginning and ending pressures and volumes of gasses when they are allowed to expand or when they are compressed:**

P_1 X V_1 = P_2 X V_2.

We want to know P_2.

$$P_2 = \frac{P_1 \times V_1}{V_2}.$$

We assume that P_1, atmospheric pressure at the tank location, is $\frac{15 lb_{American}}{in^2}$.

V_1 = 100 ft^3.

V_2 = 5 ft^3.

$$P_2 = \frac{15\frac{lb_{American}}{in^2}}{5\,ft^2} \times \frac{100\,ft^2}{1} = 300\frac{lb_{American}}{in^2}.$$

We would have to compress the hydrogen gas to a pressure of $300\frac{lb}{in^2}$ to put it all in the steel tank.

What is this pressure in the metric system?

In the metric system we can measure the pressure in $\frac{kg}{cm^2}$.

We can convert the American pounds to kilograms, and then convert the square inches to square centimeters. 2.2 American lb = 1 kg. 6.45 cm^2 = 1 in^2.

$$\frac{300 lb_{American}}{in^2} \times \frac{1kg}{2.2 lb_{American}} \times \frac{1in^2}{6.45cm^2} = \frac{21.1kg}{cm^2}.$$

7.10 An automobile tire having a capacity of 1500 in^3 is inflated to a pressure of 40lb/in^2. What is the density of the air within the tire? To what volume would the air in the tire expand if there should be a blow out?

***The following natural law relates the pressures and densities of gasses:**

$$\frac{P_1}{P_2} = \frac{D_1}{D_2}.$$

P_1 and D_1 are the pressure and density of the gas <u>before</u> it is changed.

P_2 and D_2 are the pressure and density of the gas <u>after</u> it is changed.

What is the density of the air within the tire?

$\frac{P_{air}}{P_{tire}} = \frac{D_{air}}{D_{tire}}$. We want to find D_{tire}.

***The density of air at atmospheric pressure is 4.8 x 10^{-5} $\frac{lb}{in^3}$.**

$$D_{tire} = \frac{P_{tire} \cdot D_{air}}{P_{air}} = 4.8 \times 10^{-5} \frac{lb}{in^3} \times \frac{40 \frac{lb}{in^2}}{15 \frac{lb}{in^2}} \cong 1.04 \times 10^{-3} \frac{lb}{in^3}.$$

The symbol $\cong$ means "is about equal to".

To what volume would the air in the tire expand if there should be a blow out?

***The following natural law relates the pressures and volumes of gasses:**

$$P_1 \times V_1 = P_2 \times V_2.$$

$$P_{air} \times V_{air} = P_{tire} \times V_{tire}.$$

$$V_{air} = \frac{P_{tire} \times V_{tire}}{P_{air}} = \frac{40 lb/in^2}{15 lb/in^2} \times \frac{1500 in^3}{1} = 4000 in^3.$$

***When the tire had a blow out, the air in the tire expanded to about 4000/1500 = 2.6 times the volume it had in the tire. This occurs very rapidly, and can cause parts of the tire that break off to become dangerous projectiles. When inflating large tires, for example, aircraft tires, it is always important to place them in a protective "inflating cage" to prevent people from being harmed if a blow out should occur.**

7.11 When normal conditions prevail, a gram of air occupies about 800 cm³. Find the volume a gram of air would occupy on top of Mount Blanc (altitude 15,781 ft) where the barometer indicates that the pressure is only about one half of what it is at sea level.

$$P_1 \times V_1 = P_2 \times V_2.$$

$$P_{normal} \times V_{normal} = P_{MontBlanc} \times V_{MontBlanc}.$$

$$V_{MontBlanc} = \frac{P_{normal} \cdot V_{normal}}{P_{MontBlanc}} = \frac{P_{normal} \cdot V_{normal}}{1/2 P_{normal}} = 2 \times V_{normal} = 2 \times 800 cm^3 = 1600 cm^3.$$

7.12 The mean density of the air at sea level is 0.0012gm/cm³. What is its density at the top of Mount Blanc?

$$P_1 \times D_2 = P_2 \times D_1.$$

$$P_{Atmospheric} \times D_{MontBlanc} = P_{MontBlanc} \times D_{Atmospheric}.$$

$$D_{MontBlanc} = \frac{P_{MontBlanc} \times D_{Atmospheric}}{P_{Atmospheric}}.$$

$$D_{MontBlanc} = \frac{\frac{1}{2} P_{Atmospheric} \times D_{Atmospheric}}{P_{Atmospheric}} = \frac{2}{2} \times \frac{\frac{1}{2} P_{Atmospheric} \times D_{Atmospheric}}{P_{Atmospheric}} = \frac{D_{Atmospheric}}{2} = 0.0006 \frac{gm}{cm^3}.$$

7.13 Two men, Glaischer and Coxwell, rose in their air balloon until the barometer height was only 18 centimeters. How many times did they have to breathe to obtain the same amount of air that they could attain at the surface?

The normal atmospheric pressure is 76 centimeters of mercury. They were at 18 centimeters of mercury. They were breathing air at only 18/76 = less than ¼ of normal air pressure. Only about ¼ of the force pushing oxygen through each square centimeter of their lungs was available to them, so it required four times as long to push the same amount of oxygen into their lungs as at sea level.

7.14 One cm³ of air at the earth's surface weighs 0.00129 grams. If this were the density of air all the way to the top of our atmosphere, to what height would the atmosphere extend?

Suppose we measured the atmospheric pressure to be $\frac{15lb}{in^2}$.

$$\frac{15lb_{American}}{in^2} \times \frac{1in^2}{6.45cm^2} \times \frac{2lb_{metric}}{2.2lb_{American}} \times \frac{500gm}{1lb_{metric}} \cong 1057 \frac{gm}{cm^2}.$$

A one square centimeter stack of air <u>from the ground to the upper limit of our atmosphere</u> would produce a pressure of $\frac{1057gm}{cm^2}$ on the ground at sea level.

<u>Each</u> centimeter <u>of this height</u> would, on the average, produce a pressure of $\frac{0.00129gm}{1cm^2}$.

The height of the atmosphere <u>in centimeters</u> would therefore be equal to $\frac{1057gm}{cm^2}$ total divided by $\frac{0.00129gm}{1cm^2}$ for each centimeter.

$$\frac{1057 \frac{gm}{cm^2}}{0.00129 \frac{gm}{cm^2}} = 819{,}443 \Rightarrow \frac{819{,}443cm}{1} \times \frac{1m}{100cm} \times \frac{1km}{1000m} \cong 8.2 kilometers.$$

We know that the density of the air with increasing altitude becomes less, however, so we know that the outer limit of our atmosphere is much more than 8.2 kilometers.

***The height the gasses in our atmosphere have not been clearly defined, but reach to over 120 kilometers. It is interesting to find that about ¾ of the total mass of the atmosphere is within the first 11 kilometers of height above the ground.**

8. PNEUMATIC DEVICES

8.1 A water tank 8 feet deep, standing some distance above the ground, closed everywhere except at the top, is to be emptied. The only means of emptying it is a flexible tube.

(a) What is the most convenient way of using the tube, and how could it be set into operation?

Tie a weight (for example, a stone) close to one end of the tube, so that this end of the tube will remain very close to the bottom of the inside of the tank. Push this end of the tube into the water, and then keep pushing the rest of the tube into the water to fill the tube completely with water. The end of the tube that first entered the water remains under water the whole time. This causes all air to be pushed out of the tube. Close the other end of the tube under water to prevent air from entering it and pull the tube upward and outside of the tank. Now place this end of the tube so that it is below the bottom of the outside of the tank. The weighted end of the tube must remain near the bottom of the tank on the inside of the tank the whole time. Open the closed end of the tube outside of the tank. Water begins to flow out of the tank. This method of emptying the tank is called **siphoning**.

How does siphoning work?

The pressure that is at the <u>lower end</u> of the tube in the tank <u>acting upward</u> is equal to atmospheric pressure plus the pressure caused by the depth of the water in the tank (caused by gravity acting downward on the water in the tank).

The pressure that is at the <u>upper end</u> of the tube in the tank <u>acting downward</u>, when this end of the tube is at the water level, is equal to atmospheric pressure plus the pressure caused by the weight of the water in the tube (caused by gravity acting downward on the water inside of the tube).

These two pressures add together to form a zero pressure acting on the water in the tube. They can therefore not cause the water in the tube to flow.

As the tube and the water in the tube are pulled upward toward the top of the tank, an additional downward pressure of the water in the tube <u>inside the tank</u> is caused by the additional height of the column of water in the tube, measured from the water level in the tank to the top of the tank.

As the tube and the water in the tube are bent over the top of the tank, and back down to the level of the water in the tank, downward pressure of the water in the bend on the outside of the tank becomes equal to the downward pressure in the bend on the inside of the tank. This is true because the height of the column of water in the tube bend inside of the tank above the tank water level is equal to the height of the column of water in the tube bend outside of the tank above the tank water level. These two water pressures are equal, but each side of the bend is trying to move the water in a direction opposite to the other side. These two pressures <u>also</u> add to a zero pressure acting on the water in the “bend” of the tube. They can not cause the water in the tube to move.

When the end of the tube outside of the tank is moved to a position *lower than* the *water surface* in the tank, however, the column of water in the tube bend outside of the tank is longer than the column of water in the tube bend inside of the tank. This causes the water to start flowing toward the outside of the tank through the tube.

Water flow is only caused by the weight of the column of water measured from the water level inside of the tank downward to the level of the end of the tube outside of the tank (the end of the tube outside of the tank is *lower than* the water level inside of the tank). Lengthening this distance will cause the water to flow out of the tank faster.

If the end of the siphoning tube outside of the tank is not below the bottom of the tank, water flowing out of the tank will stop when the water level inside of the tank becomes equal to the level of the end of the siphon tube outside of the tank. To completely empty the tank, the end of the siphon tube outside of the tank must therefore be below the bottom of the tank, and the end of the tube inside of the tank must be at the bottom of the tank.

(b) How long must the tube be to empty the tank completely?

The tube must be long enough to reach from the bottom of the inside of the tank, upward over the top of the tank, and to below the bottom of the outside of the tank. Since the tank is 8 feet deep, more than 16 feet of tube is required to empty the tank. In addition to the 16 feet, enough extra tube must be added to form the bend and afterward still extend to below the bottom of the tank.

8.2 Kerosene has a specific gravity of $0.8\frac{gm}{cm^3}$. Over what height can it be siphoned using a vacuum at normal atmospheric pressure?

***Normal atmospheric pressure is** $1033.6\frac{gm}{cm^2} \cong 1000\frac{gm}{cm^2} \cong \frac{15lb_{Amer.}}{in^2}$ **.**

A column of water that is 1033.6 cm high acting on a single square centimeter will cause the same pressure, because 1 cm^3 of water weighs 1 gm.

Kerosene is only 0.8 times as heavy as water, so a column of kerosene that can cause this same pressure must be higher than the column of water. It must be $\frac{1}{0.8}$ = 1.25 times higher than the column of water.

1.25 X 1033.6 = 1292cm = 12.92 meters high.

8.3 Let a siphon be made by filling a flask 1/3 full of water, closing it with a cork through which pass two pieces of glass tubing and then inverting so that the lower end of one of the tubes is in a beaker of water. If the other tube is of considerable length, the fountain formed in the flask will play forcibly and continuously until the beaker is emptied. Explain.

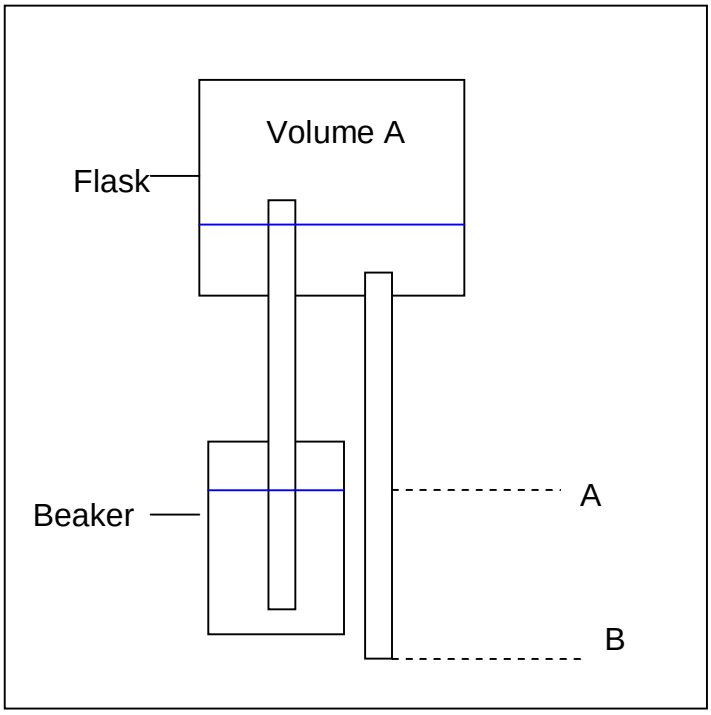

The flask is closed from outside air pressure, and the beaker is open to outside air pressure. To enable an explanation, we will assume that the tuber at point B is closed, and the same air pressure is above the water in the flask and above the water in the beaker, namely, normal outside air pressure.

When the tube full of water is opened at B, gravity causes the water to flow out of the flask.

As water flows out of the flask volume A becomes larger; this lowers the air pressure above the water in the flask.

The higher outside atmospheric air pressure pushes the water through the tube that connects the beaker with the flask from the beaker into the flask, causing a fountain to appear above the tube inside of the flask.

As the distance from A to B increases, the fountain becomes more violent in the flask.

The action continues until the water in the beaker is reduced to a level just under the end of the tube in it.

8.4 Draw a lifting type water pump and explain what happens on the up and down strokes.

This kind of water pump consists of a cylinder (tube, pipe) that has a one way valve at its lower end, and a piston that can move up or down inside of the cylinder. The piston is made so that water can only pass through the one way valve in it, but not between it and the cylinder. The piston divides the inside of the cylinder into two spaces, one above the piston (volume A which we will designate as A) and the other below the piston (volume B which we will designate as B).

The following figure shows what happens on the up stroke of a water pump.

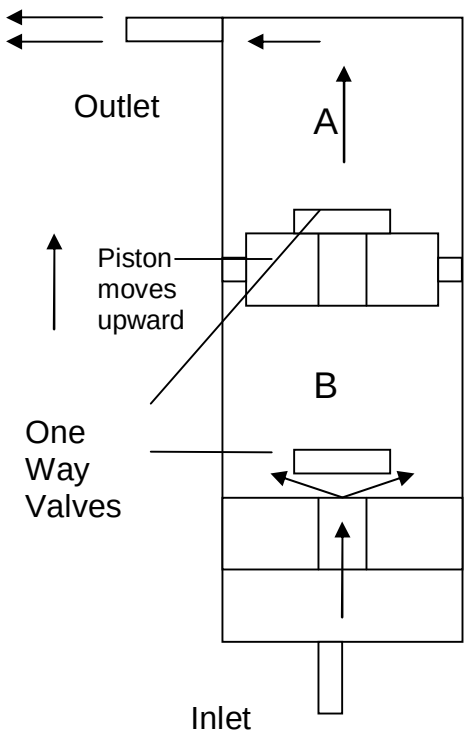

When the pump handle pulls the piston in the water pump upward, Volume A becomes smaller, increasing the pressure in this volume. This causes the one way valve in the piston to close. Water above the piston is now trapped and pressed out of volume A through the outlet pipe to the outside above ground where it can be used.

At the same time, volume B becomes larger, reducing the pressure in this volume. Outside pressure near the inlet pipe is now greater than the pressure in volume B; this causes water to flow from underground upward through the inlet pipe and open the lower fixed one way valve at the bottom of the cylinder. Water is forced from underground up through the inlet pipe into volume B.

Water is pumped outward to be used, and volume B is filled with fresh water from underground when the piston moves upward.

The following figure shows what happens during the down stroke of a water pump.

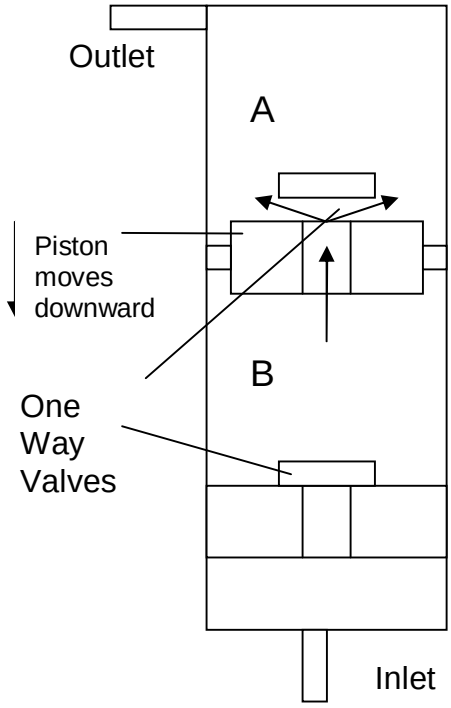

When the pump handle pushes the piston in the water pump downward, volume A becomes larger, reducing the pressure in this volume to less than the pressure in volume B; this causes the one way valve in the piston to open.

At the same time, volume B becomes smaller, increasing the pressure in this volume; this causes the lower fixed one way valve to remain closed. The pressure in volume B is now greater than the pressure in volume A, and water is forced from Volume B upward through the one way valve in the piston into volume A.

Fresh water is pumped from Volume B into Volume A, filling it with water when the piston moves downward. This water can now be pumped through the outlet the *next time* the pump handle pulls the piston upward.

8.5 Draw a diagram of a water pump operated by force with an air dome and explain what happens during the up and down strokes.

This water pump has a movable piston and two fixed one way valves at the base of the cylinder. One of these valves receives inlet water from an outside source, and the other valve leads to the outside pressurized water system. There is no valve in the piston. Compressed air in the air dome maintains water pressure in the outside water system.

The following figure shows what happens on the up stroke.

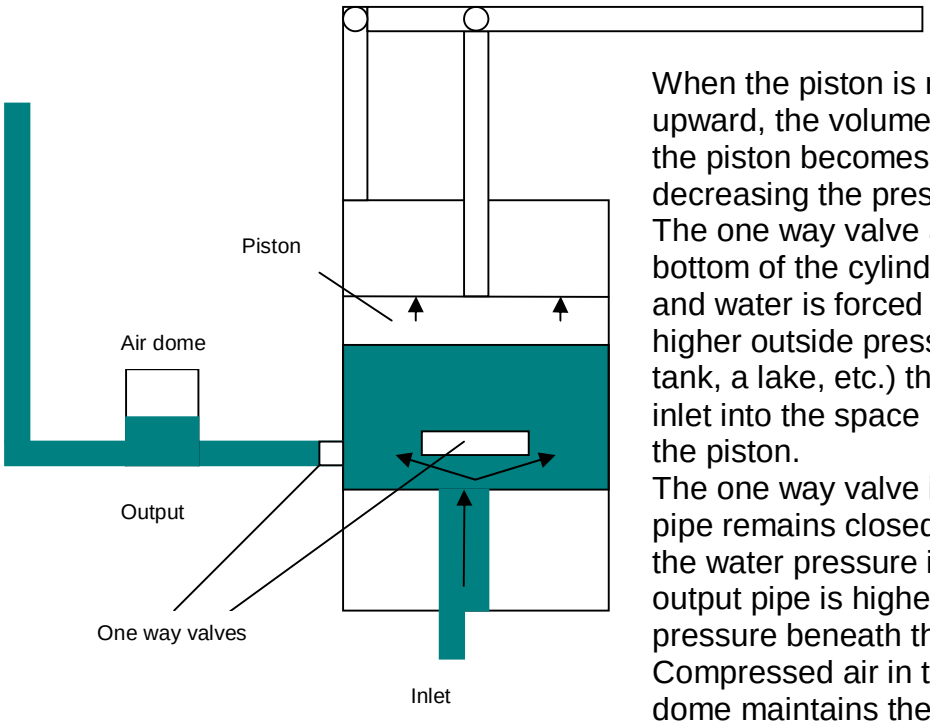

When the piston is moved upward, the volume beneath the piston becomes larger, decreasing the pressure there. The one way valve at the bottom of the cylinder opens and water is forced from the higher outside pressure (a tank, a lake, etc.) through the inlet into the space beneath the piston.
The one way valve in the outlet pipe remains closed, because the water pressure in the output pipe is higher than the pressure beneath the piston. Compressed air in the air dome maintains the output water pressure in the outside water system.

The following figure shows what happens during the down stroke.

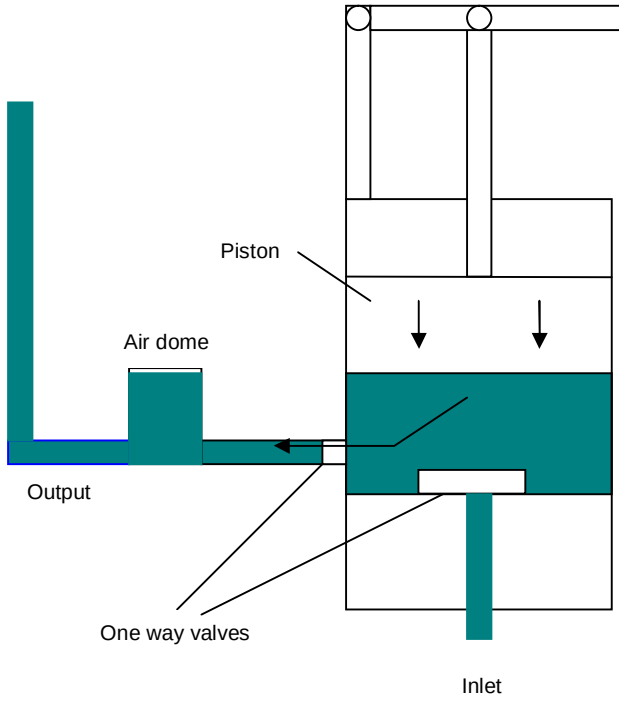

When the piston is moved downward, the volume beneath the piston becomes smaller, increasing the pressure in this space to higher than the inlet pressure. The one way valve at the bottom of the cylinder closes and water is forced from the higher pressure under the piston through the other one way valve into the output pipe to the outside water system. Air pressure in the air dome is compressed, increasing the outside water pressure in the outside water system. As water is used in the outside water system, its pressure decreases.

8.6 If the cylinder of an air evacuation pump is of the same size as a container, what fractional part of the air is removed from the container by one complete stroke of the pump?

Since the amount of the air in the container was halved by removing the same volume from it, the pressure of the air in the container fell to only ½ of what it was before.

Only ½ of the air is left in the container. After two strokes only ½ of this ½, or only ¼ of the air, is left in the container, and the pressure is therefore only ¼ of what it originally was.

We can make a formula to find the pressure in the container after a certain number of pump strokes:

P = ½ ^{N}, where N is the number of strokes.

After three strokes of the pump, N = 3, the pressure is ½ ^{3}, which is ½ x ½ x ½ = 1/8. After five strokes the pressure is only 1/32 of what it originally was.

After only ten strokes of the pump the pressure has fallen to 1/1024 of the original value.

8.7 If the cylinder of an air evacuation pump is one 1/3 the size of a container, what fractional part of the air will be left in the container after 5 strokes?

At the end of the first stroke the gas has been distributed over a volume that is one and 1/3, or 4/3 as large as the container volume. The pressure in the container therefore falls to only 1/ (4/3) = 3/4 of its original pressure. This happens at each stroke of the evacuation air pump.

$$P1 \times V1 = P2 \times V2 \Rightarrow P2 = \frac{P1 \times V1}{V2} = \frac{P1}{1} \times \frac{V1}{\frac{4V1}{3}} = \frac{P1}{1} \times \frac{V1}{\frac{4V1}{3}} \times \frac{3}{3} = \frac{P1}{1} \times \frac{3V1}{4V1} = \frac{3}{4} \times P1.$$

We can make a formula to find the pressure after a certain number of pump strokes:

P = 3/4 ^{N}, where N is the number of strokes.

The pressure in the cylinder after 5 strokes is $3/4^5$ = 3/4 x 3/4 x 3/4 x 3/4 x 3/4 = 243/1024 = 0.237 of the starting pressure.

What would be the reading of a barometer inside of the container if the atmospheric pressure at its location is 76mm mercury?

We started with an atmospheric pressure of 76mm mercury. The pressure in the container, as well as in the pump, following five strokes would be 0.237 X 76mm mercury, or 18 mm mercury. Following ten strokes, the pressure would be $3/4^{10}$ x 76mm, or 0.0563 x 76mm = 4.28mm. A perfect vacuum would be 0mm mercury.

8.8 Theoretically, can a container ever be completely exhausted by an evacuation pump, even if the pump is mechanically perfect?

No, because, for example, if the volume of the pump and the container being emptied of air were equal, by every stroke there would still be ½ of the gas remaining in the container that was in it at the end of the previous stroke. This remains true, regardless of the number of strokes the pump completes.

***This is why a perfect vacuum can not be attained.**

8.9 Explain by reference to atmospheric pressure why a balloon rises.

According to the principle of Archimedes, the upward (buoyant) force exerted by a liquid (and also a gas) that is under the influence of gravity is exactly equal to the weight of the displaced liquid (or gas).

If the weight of the air in the balloon plus the weight of the balloon is the same as the weight of the air displaced in the atmosphere, the balloon would not rise. Mathematically:

$\text{Weight}_{\text{Balloon}} + \text{Weight}_{\text{Air in Balloon}} = \text{Weight}_{\text{Air Displaced by Balloon}}$, which means:

$\text{Weight}_{\text{Air in Balloon}} = \text{Weight}_{\text{Air Displaced By Balloon}} - \text{Weight}_{\text{Balloon}}$.

To make the balloon rise, the gas in the balloon must weigh *less than* the weight of the air the balloon displaces minus the weight of the balloon.

$\text{Weight}_{\text{Air in Balloon}} < (\text{Weight}_{\text{Air Displaced By Balloon}} - \text{Weight}_{\text{Balloon}})$.

This can be made to be true when the air in the balloon is heated to make it warmer than the air in the atmosphere, or when a gas is put into the balloon that is less dense (lighter) than the air in the atmosphere (for example, hydrogen or helium).

8.10 A piston is in a tube. The air pressure on the right side of the piston is equal to twice the atmospheric pressure, while the air pressure on the left side of the piston is ½ of atmospheric pressure. What force acts on the piston when its cross-sectional area is 50 square centimeters?

If the atmospheric pressure on this day were to be 1000 gm/cm^2, the pressure on the right side of the piston would be 2000 gm/cm^2 and on the left side of the piston would be 500 gm/cm^2. The difference between these two opposing pressures would then be 2000 – 500 = 1500 gm/cm^2. A 1500 gm force pushes on each square cm of area of the piston toward the side of the piston that has the lower pressure; it pushes the piston toward the left.

The total force pushing the piston toward the left is:

1500 gm/cm^2 x 50 cm^2 = 75,000gm.

The force acting on the piston is 75 kilograms.

8.11 What determines how high a balloon will rise? Under what conditions will it begin to descend?

A balloon will continue to rise until its weight and the weight of the gasses in it are equal to the weight of the air it displaces in the atmosphere.

As the balloon rises, the atmospheric air becomes less and less dense; the atmospheric pressure acting on the balloon decreases.

If the balloon is an open balloon, some of the gas in it will escape to the atmosphere while it is rising, because the atmospheric pressure holding it in the balloon is continuously becoming less. The balloon will eventually reach a height where its total weight is equal to the weight of the air it displaces, and will stop rising. If the balloon is a hot air balloon, it will begin to fall as the gas in it cools; this decreases the volume of the balloon, the volume of air displaced by the balloon, and the balloon begins to fall back toward the earth.

If the balloon is a closed balloon, and made of a stretchable substance, like rubber, the balloon will become larger and larger as it rises through ever decreasing atmospheric pressure. This causes the balloon to rise until the material it is made of breaks. Then the gas escapes from within the balloon and the damaged balloon falls back toward the earth.

8.12 If a diving bell is sunk until the level of the water within it is 1033 centimeters beneath the surface of the water, to what fraction of its initial volume has the enclosed air been reduced?

1033 gm/cm^2 is atmospheric pressure.

If the diving bell is pushed 1033 cm below the surface of the water, this will add 1033 gm/cm^2 to atmospheric pressure, because each cm^3 of water weighs 1 gm.

The pressure inside of the diving bell must then be 2 times the atmospheric pressure.

This will make the volume of the air in the bell ½ of what it was before it was sunk in the water at 1 atmospheric pressure.

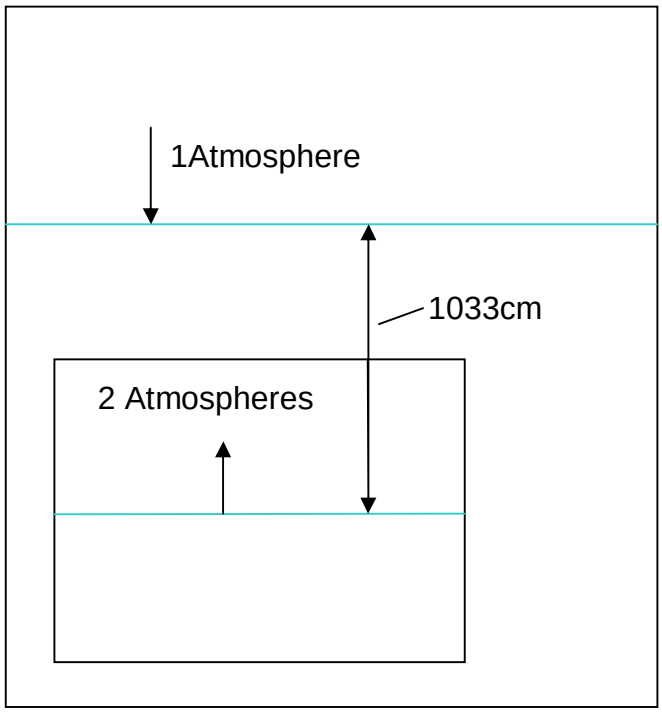

8.13 If a diver's tank has a volume of 2 ft^3, and contains a pressure of 40 atmospheres, to what volume will the air expand when it is released at a depth of 34 feet under the water surface?

V_1 = 2ft^3.

P_1 = 40 Atmospheres.

$$P_2 = \frac{34\,ft}{1} \times \frac{12in}{1\,ft} \times \frac{2.54cm}{1in} \times \frac{1gm}{1cm^3} = 1{,}036.3\frac{gm}{cm^2} \cong 1atmosphere.$$

We need to find V_2.

$$V_1 \times P_1 = V_2 \times P_2.$$

$$V_2 = \frac{V_1 \times P}{P_2}.$$

$$V_2 = \frac{2\,ft^3}{1} \times \frac{40atmospheres}{1atmosphere} = 80\,ft^3.$$

8.14 A submarine weighs 1800 American tons when its submerging tanks are empty, and in that condition 10% of its volume is above water. What weight of water must be let into the submerging tanks to just submerge the boat?

90% of the volume of the submarine is below water, so its specific gravity is 0.9.

Enough water must be let into the submerging tanks to bring the other ten percent of its weight under water. 10% of 1800 American tons is 180 American tons.

$$\frac{180t_{Amer.}}{1} \times \frac{1t_{metric}}{1.1t_{Amer.}} = 163.6t_{metric}\,.$$

What volume of water is required to make the submarine submerge?

163.6 metric tons of water are required to make the submarine submerge.

This is the weight of $\frac{163.6t_{metric}}{1} \times \frac{1m^3{}_{water}}{1t_{metric}} = 163.6m^3{}_{water}$.

163.6 cubic meters of water must be pumped into the submerging tanks before the submarine will fully submerge.

$$\frac{163m^3}{1} \times \frac{1{,}000{,}000cm^3}{m^3} \times \frac{1in^3}{16.39cm^3} \times \frac{1\,ft^3}{1{,}728in^3} = 5{,}755\,ft^3\,.$$

5,755 cubic feet of water must be pumped into the submerging tanks before the submarine will fully submerge.

9. MOLECULAR MOTIONS

9.1 If a container filled with hydrogen at a pressure of 2 atmospheres has a small leak, the pressure in the container falls off at a rate four times faster than if the container was filled with air. Can you explain why this is so?

If the size of hydrogen is about ¼ the size of the average air molecule, then four atoms of hydrogen would go through the hole where normally only one atom of the gasses in the air would go through. The air would take four times longer to go through the leaking hole than hydrogen would. The pressure inside of the container would last about four times as long when air is in the container, then.

9.2 What is the density of air within an automobile tire that is inflated to a pressure of 40 lb/in^2?

One atmosphere pressure is 14.7 lb/in^2.

$$\frac{40lb_{Amer.}}{in^2} \times \frac{1atmosphere}{\frac{14.7lb_{Amer.}}{in^2}} = \frac{40lb_{Amer.}}{in^2} \times \frac{1in^2}{14.7lb_{Amer.}} \times \frac{1atmosphere}{1} = 2.72atmospheres.$$

At one atmosphere of pressure the density of air is $\frac{1.293gm}{1L}$.

At 5.44 atmospheres of pressure the density of air is $2.72 \times \frac{1.293gm}{1L} \cong \frac{3.5gm}{1L}$.

9.3 One liter of air at 76cm of mercury atmospheric pressure is compressed so as to occupy 400 cm^3. What is the pressure against the walls of the container?

V_1 = 1000 cm^3. P_1 = 1 atmosphere. V_2 = 400 cm^3. We want to find P_2.

$$P_1 \times V_1 = P_2 \times V_2.$$

$$P_2 = \frac{P_1 \times V_1}{V_2} = \frac{1atmosphere \times 1000cm^3}{400cm^3} = 2.5atmospheres.$$

The resulting pressure against the walls of the container is 2.5 atmospheres.

9.4 If an open container contains 250 gm of air when the barometric height is 750mm mercury, what weight will the same container at the same temperature contain when the barometric pressure is 740 mm mercury?

At 750mm mercury the air weighs 250 gm. At 740mm mercury it will weigh $\frac{740}{750}$ as much. At 740mm mercury the container of air will weigh $250gm \times \frac{740}{750} = 246.66gm$.

9.5 (a) Find the pressure to which a diver was subjected who descended to a depth of 304 ft.

We will change the feet into inches, and the inches into centimeters.

$\frac{304\,ft}{1} \times \frac{12in}{1\,ft} \times \frac{2.54cm}{1in} \cong 9{,}266cm$. The density of water is $\frac{1gm}{1cm^3}$.

The pressure of a column of water 9,266cm deep is the density of water multiplied by this depth.

$\frac{9266cm}{1} \times \frac{1gm}{1cm3} = \frac{9266gm}{1cm^2}$. We will change the grams into metric pounds, the metric pounds into American pounds, and the square centimeters into square inches, to find the answer in $\frac{lb_{Amer.}}{in^2}$.

$$\frac{9266gm}{1cm^2} \times \frac{1lb_{Metric}}{500gm} \times \frac{1.1lb_{Amer.}}{1lb_{Metric}} \times \frac{6.45cm^2}{1in^2} \cong \frac{131.5lb_{Amer.}}{1in^2}.$$

9.5 (b) Find the density of air in his suit, if the density of air at the surface of the water is 0.00128 $\frac{gm}{cm^3}$, and the temperature is assumed to remain constant.

1 atmosphere of pressure is equal to $\frac{1033gm}{cm^2}$.

$\frac{9266gm}{1cm^2} \times \frac{1atmosphere}{\frac{1033gm}{cm^2}} = \frac{9266gm}{1cm^2} \times \frac{1cm^2}{1033gm} \times \frac{1atmosphere}{1} = 8.96atmospheres.$ The air density in his suit is $\frac{8.96atmospheres}{1} \times \frac{\frac{0.00128gm}{cm^2}}{1atmosphere} = \frac{0.01156gm}{cm^2}$.

9.6 A bubble of air that escaped from the diver's suit in problem 9.5 would increase to how many times its volume on reaching the surface?

$$P_1 \times V_1 = P_2 \times V_2.$$

$$P_{surface} \times V_{surface} = P_{submerged} \times V_{submerged}.$$

$$V_{surface} = \frac{P_{submerged} \times V_{submerged}}{P_{surface}} = \frac{\frac{9266gm}{cm^2}}{\frac{1033gm}{cm^2}} \times \frac{V_{submerged}}{1} = 8.96 \times V_{submerged}.$$

9.7 Salt is heavier than water. Why does not all of the salt in a mixture of salt and water settle to the bottom?

Some of the salt molecules (NaCl) are dissociated (fall apart into their atoms) as sodium Na^+ and chlorine Cl^- ions (positive and negative, electrically charged atoms).

When these ions are hit by the molecular action of the heavy water molecules, H_2O, they give up enough energy to the ions that they remain in the spaces between the water molecules in the liquid. This also causes the speed of the water molecules in the solution to decrease (the solution becomes cooler).

We say that the salt has become dissolved in the water.

10. THE COMPOSITION AND RESOLUTION OF FORCES

To understand how forces act on objects, we must understand a minimum about right triangles. A right triangle has as one of its angles an angle equal to 90 degrees.

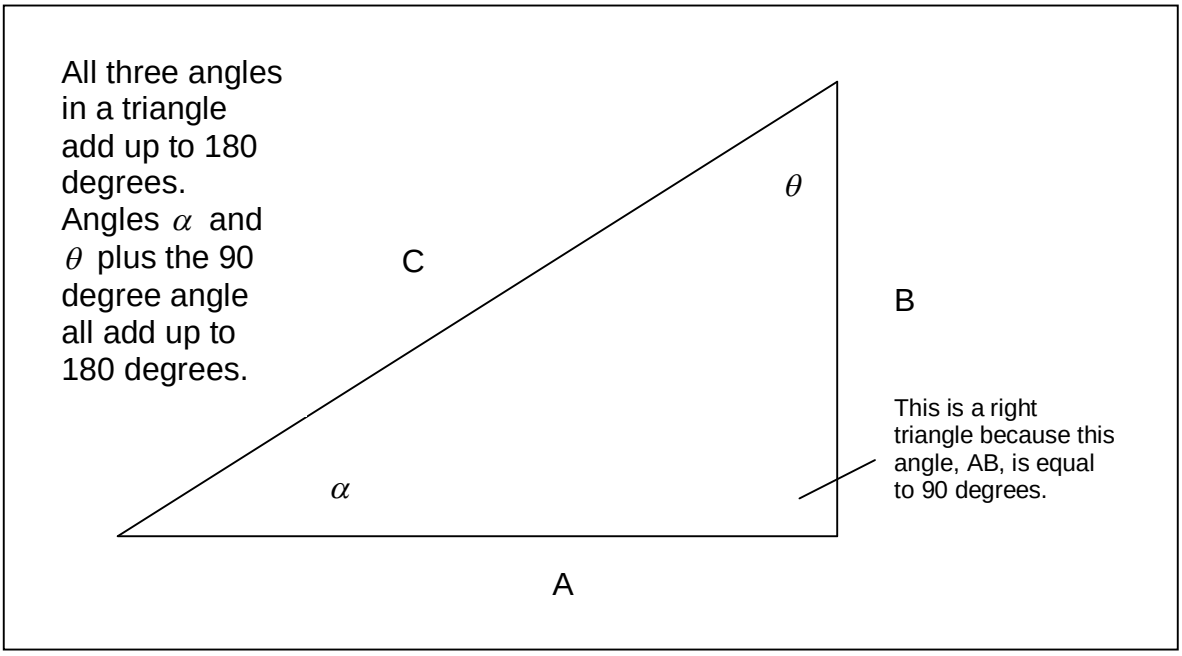

The angle α can also be called the angle AC (the angle between sides A and C of the right triangle ABC).

The length of side B divided by the length of side C is called the *sine* of the angle α .

The length of side A divided by the length of side C is called the *cosine* of the angle α .

The length of side B divided by the length of side A is called the *tangent* of the angle α .

The sine of a certain angle always has the same value.

The cosine of a certain angle always has the same value.

The tangent of a certain angle always has the same value.

10.1 The engines of a steamboat can drive it 12 miles/hour. How fast can it go up a stream in which the current is 3 miles/hour? How fast can it come down the same stream?

Upstream speed is12 miles/hour - 3 miles/hour = 9 miles/hour.

Downstream speed is 12 miles/hour + 3 miles/hour = 15 miles/hour.

10.2 The wind drives a boat east with a force that causes it to move eastward 12 miles/hour. The propellers of the boat drive it south with a force that causes it to move southward 15 miles/hour. What is the resulting speed and direction that the boat moves?

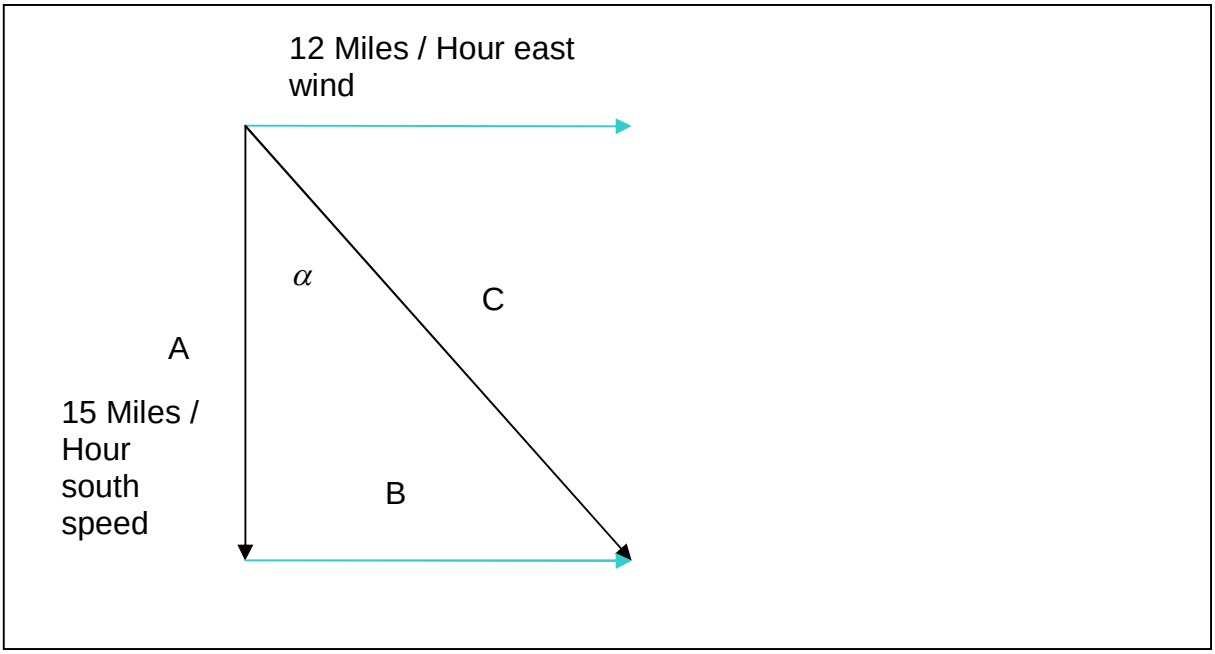

In triangle ABC the angle between sides A and B is 90 degrees.

From the theorem of Pythagoras we know that $A^2 + B^2 = C^2$.

A=15, B= 12. $C^2 = 15^2 + 12^2$.

$C^2 = 225 + 144 = 369$.

C= $\sqrt{369} = 369^{1/2}$ =19.2.

The boat moves 19.2 miles/hour.

The sine of the angle α (alpha) is B/C = 12/19.2 = 0.625. When we look up which angle has this sine we find that the angle is about 38 degrees.

Alpha is therefore about 38 degrees. South is 180 degrees.

The boat is on a course of 180 – 38 = 142 degrees.

The boat moves 19.2 miles/hour in the direction 142 degrees south-east.

10.3 A barge is anchored in a river during a storm. If the wind acts eastward on it with a force of 3000lb, and the tide northward with a force of 4000lb, what is the direction and strength of the resulting force?

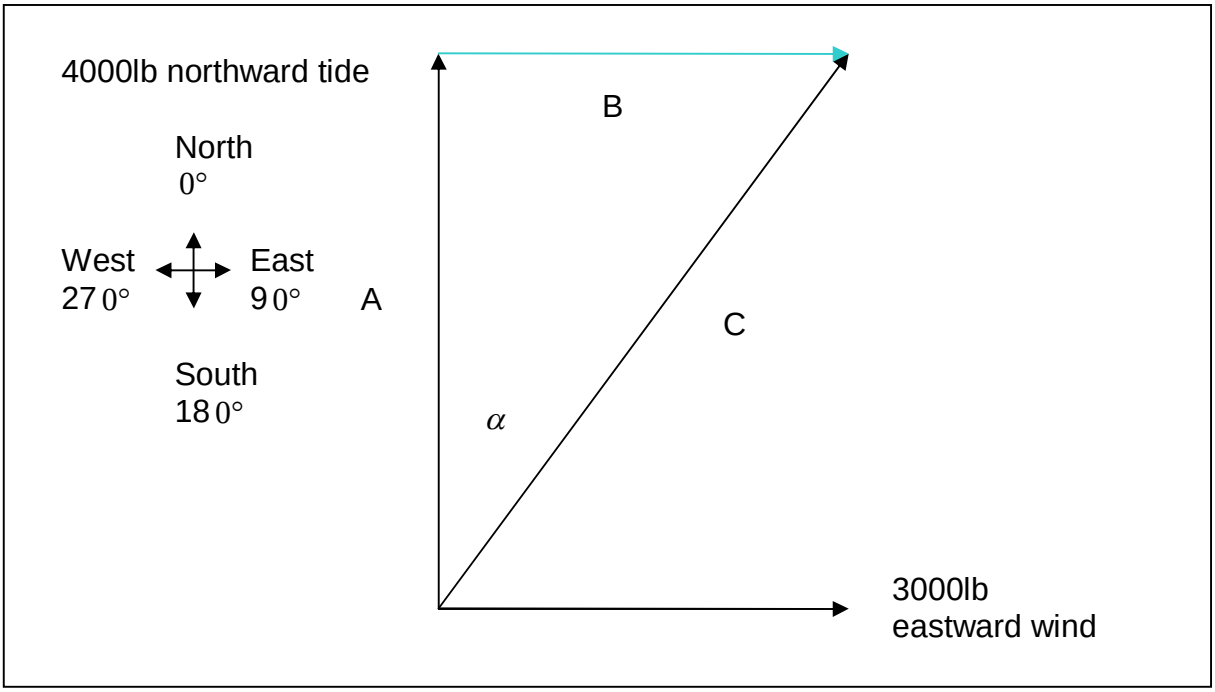

In triangle ABC the angle between sides A and B is 90 degrees.

From the theorem of Pythagoras for right triangles, we know that $A^2 + B^2 = C^2$.

A=4000, B= 3000. $C^2 = 4000^2 + 3000^2$.

$C^2 = 16000000 + 9000000 = 25000000$.

C= $\sqrt{25000000} = 25000000^{1/2}$ =5000.

The boat is affected by a force of 5000lb.

The sine of the angle α (alpha) is B/C = 3000/5000 = 0.6. When we look up the angle that has this sine, we find that the angle is about 37 degrees.

Alpha is therefore about 37 degrees. North is 0 degrees.

The boat is acted on by a force of 5000lb that tries to move it in the direction of 37 degrees north-east.

10.4 A picture weighing 20 pounds hangs on a cord whose parts make an angle of 120 degrees with each other. Find the tension in each part of the cord.

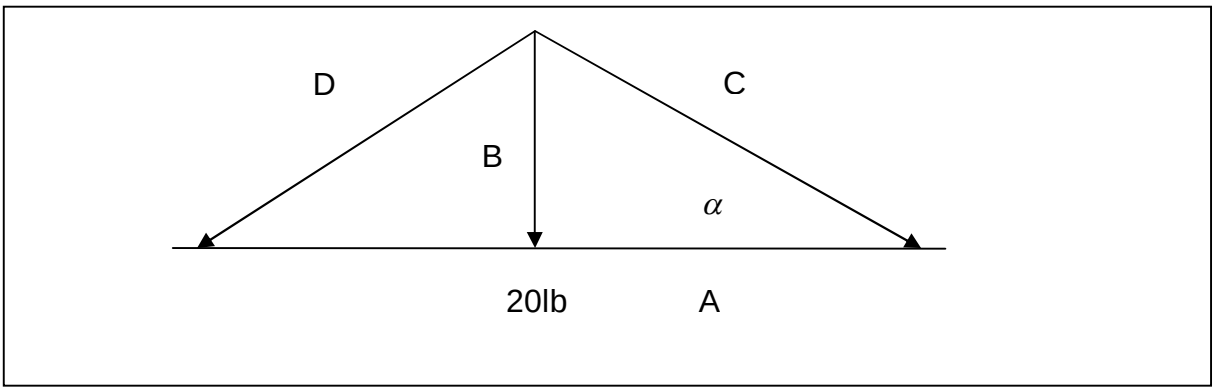

The cord angle DC is 120 degrees. Angles BD and BC are each ½ of this, or 60 degrees.

Angle AB is 90 degrees. Angle α is therefore 30 degrees.

The sine of angle α (30 degrees) is 0.5.

$\frac{B}{C}$=0.5.

C = $\frac{B}{0.5}=\frac{20}{0.5}$=40.

The tension in the cord, part C, is 40 pounds. This is also the tension in part D of the cord. The tension in every part of the cord is the same; it is 40 pounds.

***The cord must hold a weight that is twice the weight of the picture, if the cord angle at the point of hanging the picture is 120 degrees.**

10.5 If a barrel weighs 200 pounds, with what force must a man push parallel to the ramp to keep the barrel from moving when the length of the ramp is 3 meters and the height of the ramp is 1 meter?

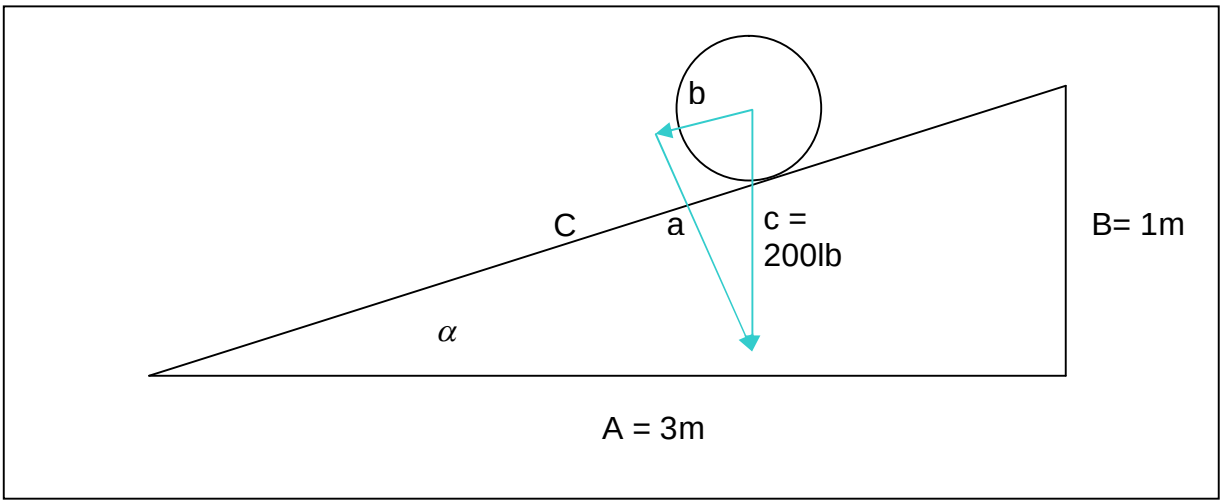

Triangle ABC (the ramp) and triangle abc are similar, because 2 of their sides are parallel, and two of their angles are equal.

Sides B and c are parallel, and sides C and b are parallel.

Angle CB = angle bc and angle AB = angle ab (both are right angles).

Both have as smallest angel the angle α, (angle AC and angle ac), which must be equal because the other two corresponding angles are equal, and all three angles in a triangle must add up to 180 degrees.

From triangle ABC we can figure the length of side C using the theorem of Pythagoras for right triangles; $C^2 = A^2 + B^2$. $C^2 = 1^2 + 3^2 = 1 + 9 = 10$

C = $\sqrt{10}$.

The sine of angle α in triangle ABC is B/C = $\frac{1}{\sqrt{10}}$.

In triangle abc, the sine of α is $\frac{b}{c}=\frac{1}{\sqrt{10}}$.

Therefore, $b = \frac{c}{\sqrt{10}} = \frac{200lb}{\sqrt{10}} = 63.2lb$.

This is the force that pushes on the barrel parallel to the surface of the ramp, which causes the barrel to roll back down the ramp. If the barrel is not to roll back down the ramp, the man must push against the barrel in the opposite direction to this force (parallel to the surface of the ramp) with a force of 63.2 pounds.

If the man pushes against the barrel in this direction with a force greater than 63.2 pounds, the barrel will roll farther up the ramp.

This force is only 62.3/ 200 = 32 % of the weight of the barrel itself.

If two men were pushing the barrel up the ramp, each man would only have to push with a force approximately equal to 16% of the weight of the barrel.

***Ramps, also called *inclined planes*, can greatly reduce the work we have to do to accomplish a job.**

Of course, the ramp must be <u>strong enough</u> to support the weight being moved over it!

10.6 A block of ice weighing 200 pounds is held at rest on an inclined plane that is 12 feet long and 5 feet high. Using the "resolution and proportion method", (a) find the component of its weight that tends to make the ice slide down the incline. (b) With what force must one push to keep the ice at rest? (c) How great is the component force that tends to break the incline?

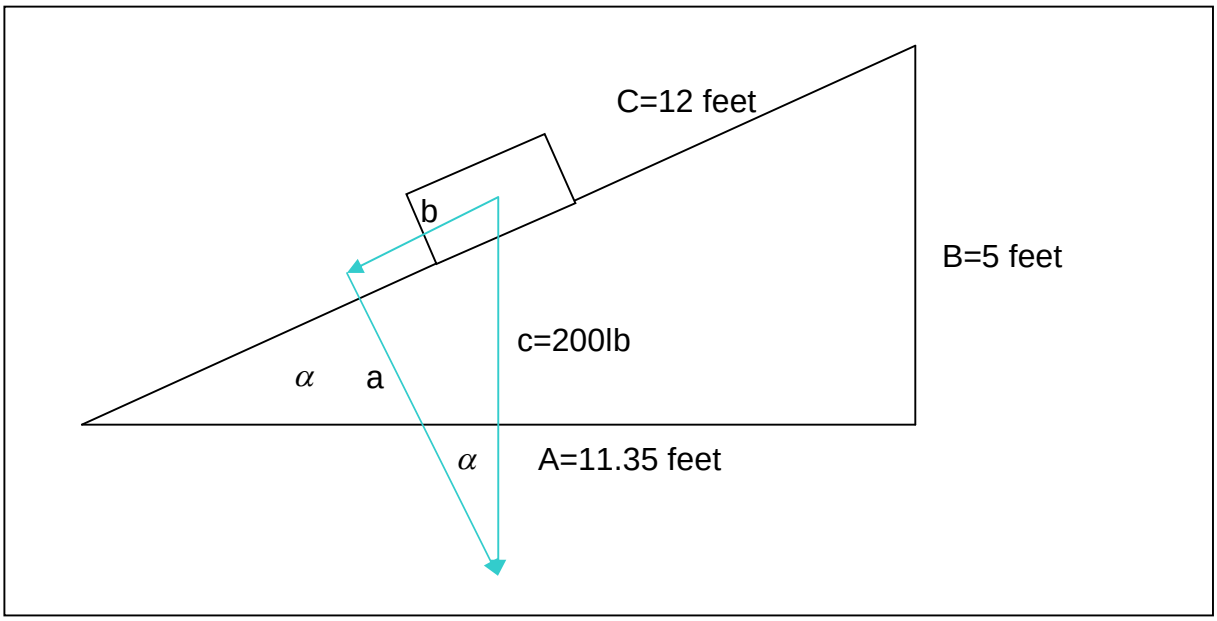

(a) Triangle ABC (the ramp) and triangle abc (the forces acting on the block of ice) are similar, because 2 of their sides are parallel, and two of their angles are equal.

Side b and side C are parallel, and side c and side B are parallel.

Angle BC = angle bc, and angle AB = angle ab (both are right angles).

Both have as smallest angel the same angle α, (angle AC and angle ac).

From triangle ABC we can figure the length of side A using the theorem of Pathagoras for right triangles; $C^2 = A^2 + B^2$. $A^2 = C^2 - B^2 = 144 - 25 = 129$.

$A = \sqrt{129} = 11.35\,ft$.

The sine of angle α is $\frac{B}{C}$ (from triangle ABC). The sine of angle α is also $\frac{b}{c}$ (from triangle abc).

$$\frac{5\,feet}{12\,feet} = \frac{b}{200lb}.$$

$$Side\_b = \frac{5\,feet}{12\,feet} \times \frac{200lb}{1} = 0.4166 \times 200lb = 83.3lb.$$

This is the component of the weight of the ice block that tends to make the ice slide down the incline.

(b)A force of 83.3lb must be pushed against the ice block in the opposite direction parallel to the surface of the ramp to prevent the ice block from sliding back down the ramp.

(c)The cosine of angle α is $\frac{A}{C}$. The cosine of angle α is also $\frac{a}{c}$.

$$\frac{11.35\,feet}{12\,feet} = \frac{a}{200lb}.$$

$$Side\_a = \frac{11.35\,feet}{12\,feet} \times \frac{200lb}{1} = 0.946 \times 200lb = 189lb.$$

This is the component of the weight of the ice block that tends to break the incline.

10.7 A Tightrope 20 meters long is depressed one meter at the center when a man weighing 60 kilograms stands on it. What is the tension in the rope?

Gravity pushes downward with the weight of the man at the center of the tightrope.

The tightrope pushes upward with an equal force on the man's feet, which keeps the man in balance at the center of the tightrope.

In the following figure the upward force of 60kg supplied by the tightrope is a common side of the two triangles ABC and abc. This side is side B in triangle ABC and side b in triangle abc.

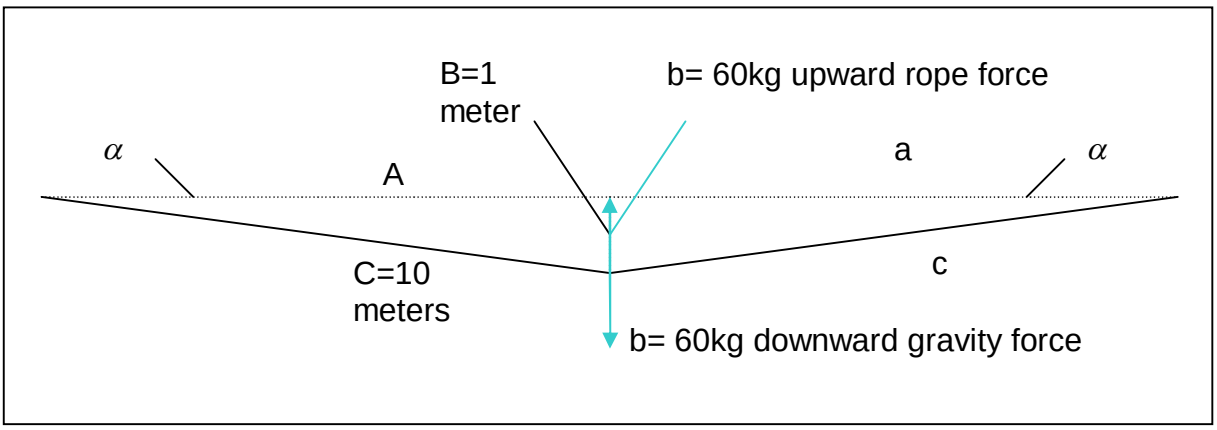

Triangles ABC and abc are equal.

The sine of angle α is $\frac{B}{C}$. The sine of angle α is also $\frac{b}{c}$.

$\frac{B}{C} = \frac{b}{c}$.

Therefore, $c = \frac{C}{B} \times b = \frac{10m}{1m} \times 60kg = 10 \times 60kg = 600kg$.

***Both ends of the tightrope must be anchored to a support that can withstand a 600kg pulling force.**

10.8 The anchor rope of a kite balloon makes an angle of 60 degrees with the earth. If the lifting force of the balloon is 1000 pounds, find the pull of the balloon on the rope and the horizontal force of the wind on the balloon.

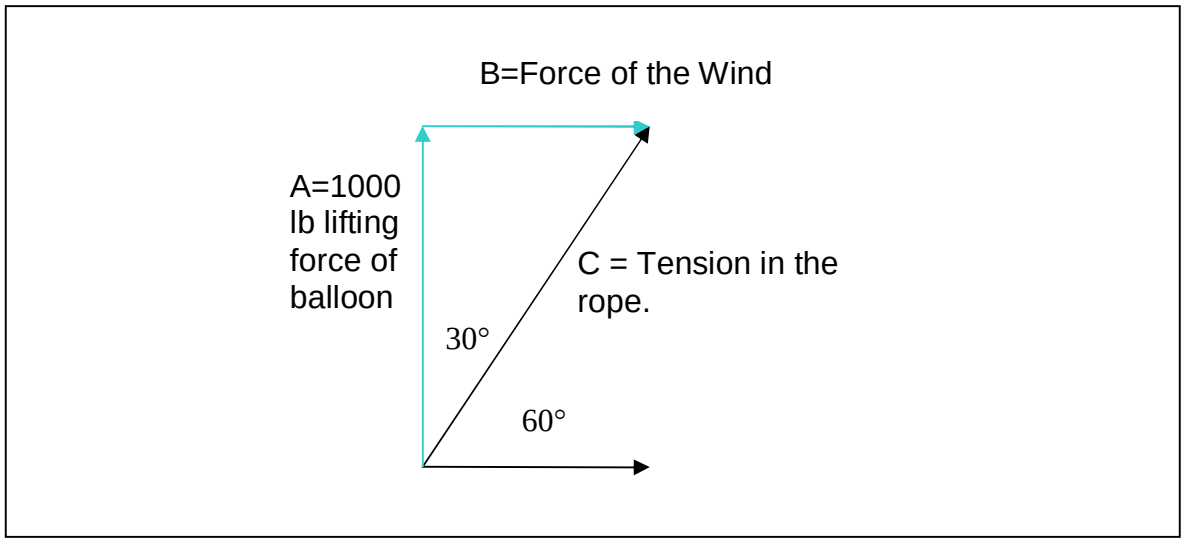

The tangent of 30 degrees is 0.577. The tangent of 30 degrees is also $\frac{B}{A} = \frac{B}{1000lb}$.

$\frac{B}{1000lb}$ = 0.577; B=0.577 x 1000lb.

B = 577 pounds. The horizontal force of the wind on the balloon is 577 pounds.

In the right triangle ABC, $C^2=A^2+B^2$. Therefore, $C^2=1000^2+577^2=1000000+332929$.

$C^2=1332929$. C= $\sqrt{1332929}$. C= 1155.

The combined lifting force of the balloon added to the force of the wind causes a tension in the rope of 1155 pounds.

10.9 A canal boat and the engine towing it move in parallel paths which are 50 feet apart. The tow rope is 130 feet long, and the force (effort) applied to the end of the rope is 1300 pounds. Find the strength of the component of the 1300 pound pull that acts parallel to the path of the boat.

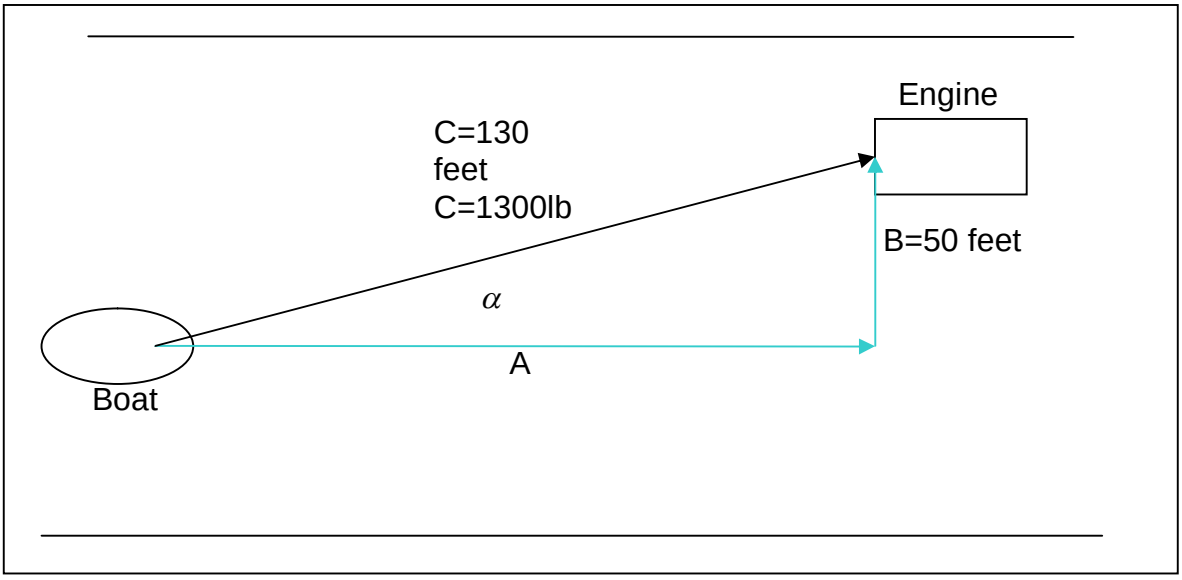

In the triangle ABC, $C^2=A^2+B^2$. $A^2=C^2-B^2$. $A^2=130feet^2 - 50feet^2$.

$A^2= 16900 – 2500feet^2$.

$A^2=14400feet^2$. A = 120feet.

The cosine of angle α is $\frac{A}{C}=\frac{120\,feet}{130\,feet}=\frac{Alb}{1300lb}$.

$$Alb=\frac{120\,feet}{130\,feet}\times\frac{1300lb}{1}=1200lb.$$

The force that pulls the boat parallel to the bank of the canal is 1200 pounds.

10.10 A boy is flying a kite. Describe the forces acting on the kite.

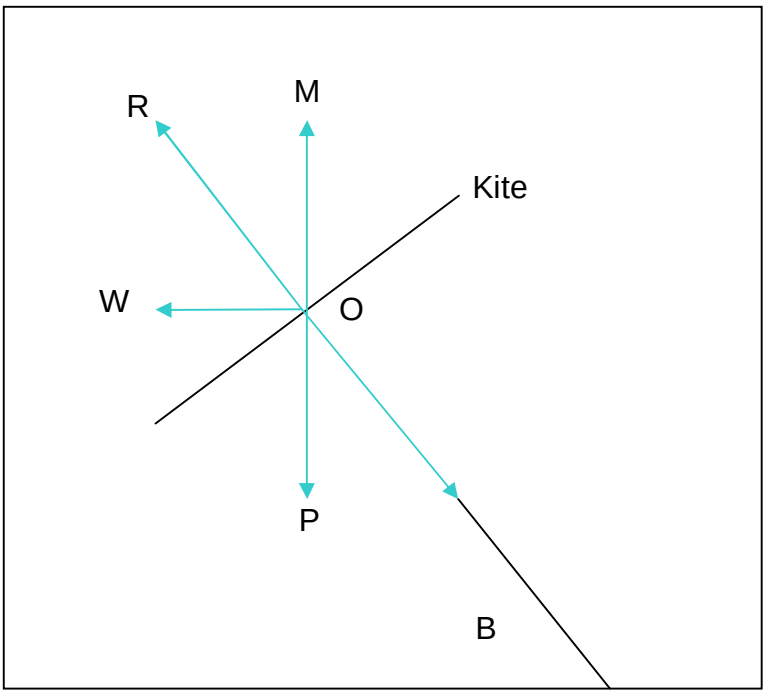

B is where the boy is standing.

W is the direction of the wind.

O is the center of all forces acting on the kite.

M is the lift on the kite caused by the wind. It is equal to the weight of the kite, P.

R is the resultant force acting on the kite caused by the wind and the weight of the kite. It is equal to the pull exerted by the boy on the kite.

Force R is equal to force B. Force P is equal to force M. The kite is stationary in the air.

11. GRAVITATION

We need to understand the difference between mass and weight when we talk about gravitation.

Mass refers to the amount of matter present in an object.

Weight refers to the <u>force</u> pulling the mass of that object toward the earth.

Mass is measured in pounds, ounces, tons, grams, kilograms, and other measures.

Weight is a force, and a force is equal to the product of mass times an acceleration acting on that mass. $F = m \times a$.

The acceleration we are always interested in when we consider gravitation, is the earth's acceleration of gravity, which we represent with the letter g.

Weight is equal to $m \times g$.

The acceleration of gravity in the English system is $\frac{32\,ft}{s^2}$.

The acceleration of gravity in the metric system is $\frac{9.81m}{s^2}$.

The weight of a one pound mass in the English system is $m \times g$, or $\frac{32lb \cdot ft.}{s^2}$.

The name given to this weight is "a one pound force", to distinguish it from a one pound mass.

If a boy steps on the scales to weigh himself in America, and finds that he weighs 100 pounds, a $\frac{3200lb \cdot ft.}{s^2}$ force is pulling on his body, but he says that he weighs 100 pounds.

The weight of a one kilogram mass in the metric system is $m \times g$, or $\frac{9.81kg \cdot m}{s^2}$.

The name given to this weight is "one Newton".

If a man steps on the scales to weigh himself in Europe, and finds that he weighs 100 kilograms, a 981 Newton force is pulling on his body, but he says that he weighs 100 kilograms.

11.1 Explain why the toy shown will not continue to lie on its side when it is released, but raise to the vertical position.

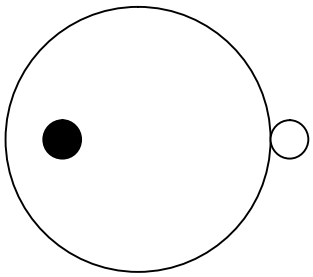

Toy held on its side. The Center of Gravity is at the location of the black spot

Does the center of gravity rise?

The center of gravity of a body will always move to its lowest possible position when the body is only affected by the force of gravity.

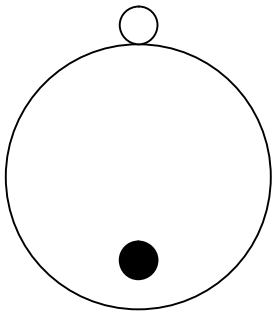

Toy is released. The Center of Gravity moves to its lowest position.

The center of gravity does not rise, it moves to its lowest possible position under the influence of gravity.

11.2 Where is the center of gravity of a hoop; of a Box?

The center of gravity of a hoop is at the center of the hoop.

The center of gravity of a box is at the center of the box.

Is the box more stable when it is empty or when it is full?

It makes no difference as long as the contents of the box do not change its center of gravity.

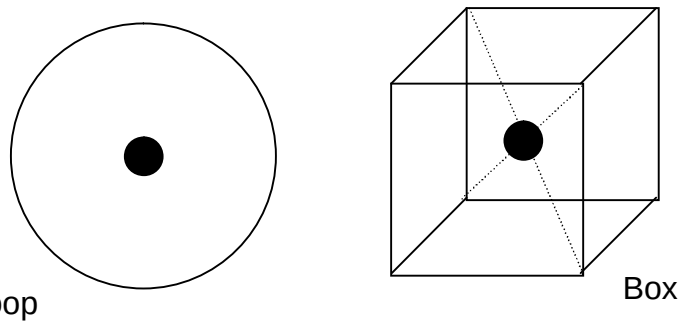

11.3 Where must the center of gravity of the beam of a balance be with reference to the supporting knife edge?

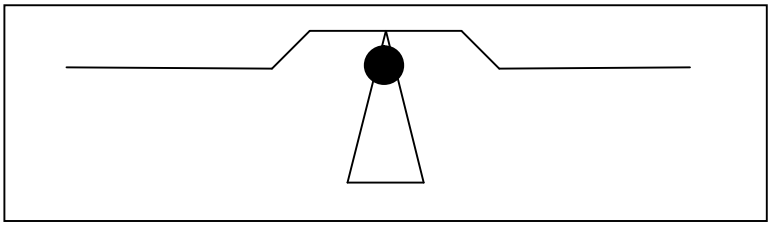

The center of gravity of any object will always move to its lowest possible position when only the force of gravity is acting on the object. In this case the object is the balance itself. The balance must be constructed so that its center of gravity is directly below the location that the knife edge contacts the balance beam.

11.4 What is the purpose of ballast in a ship?

The ballast in a ship could be a long tube attached to the floor of the ship that is filled with water. The weight of the water in the tube means that more of the ship's weight is nearer the bottom of the ship than the top of the ship. This lowers the center of gravity of the ship, making it less likely to tip to one side or the other if it is traveling in rough waters in the ocean, or where strong winds are causing high waves that could be striking the ship from the side, possibly causing it to tip over.

11.5 What is the most stable position of a brick?

The most stable position of any body is the position where its center of gravity is as low as possible. For the brick, this means that it must be lying flat on its largest area side.

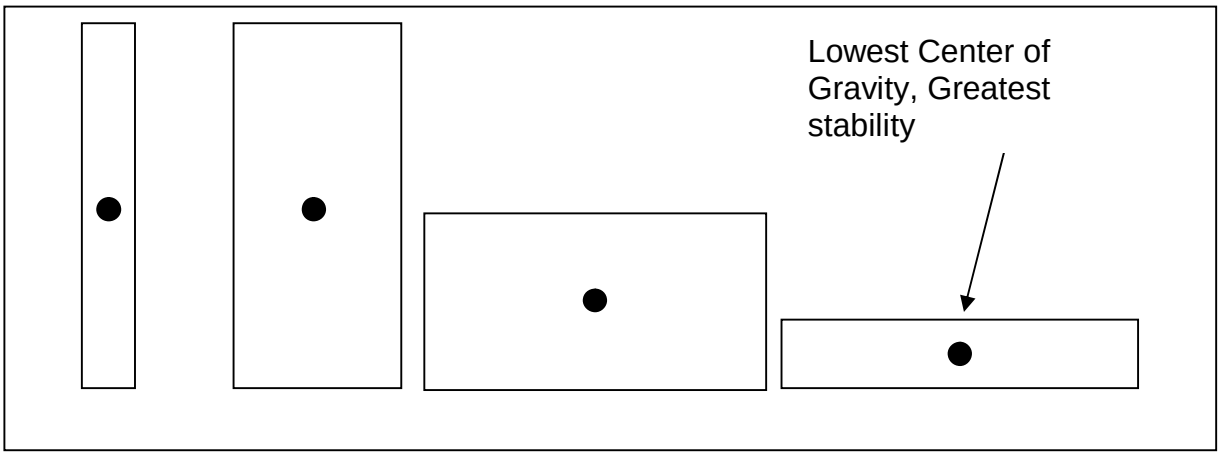

11.6 In what state of equilibrium is a pendulum at rest?

When its center of gravity is on a vertical line below its point of suspension, a pendulum is most stable. Why? In this position no component force of gravity exists that could move the pendulum horizontally.

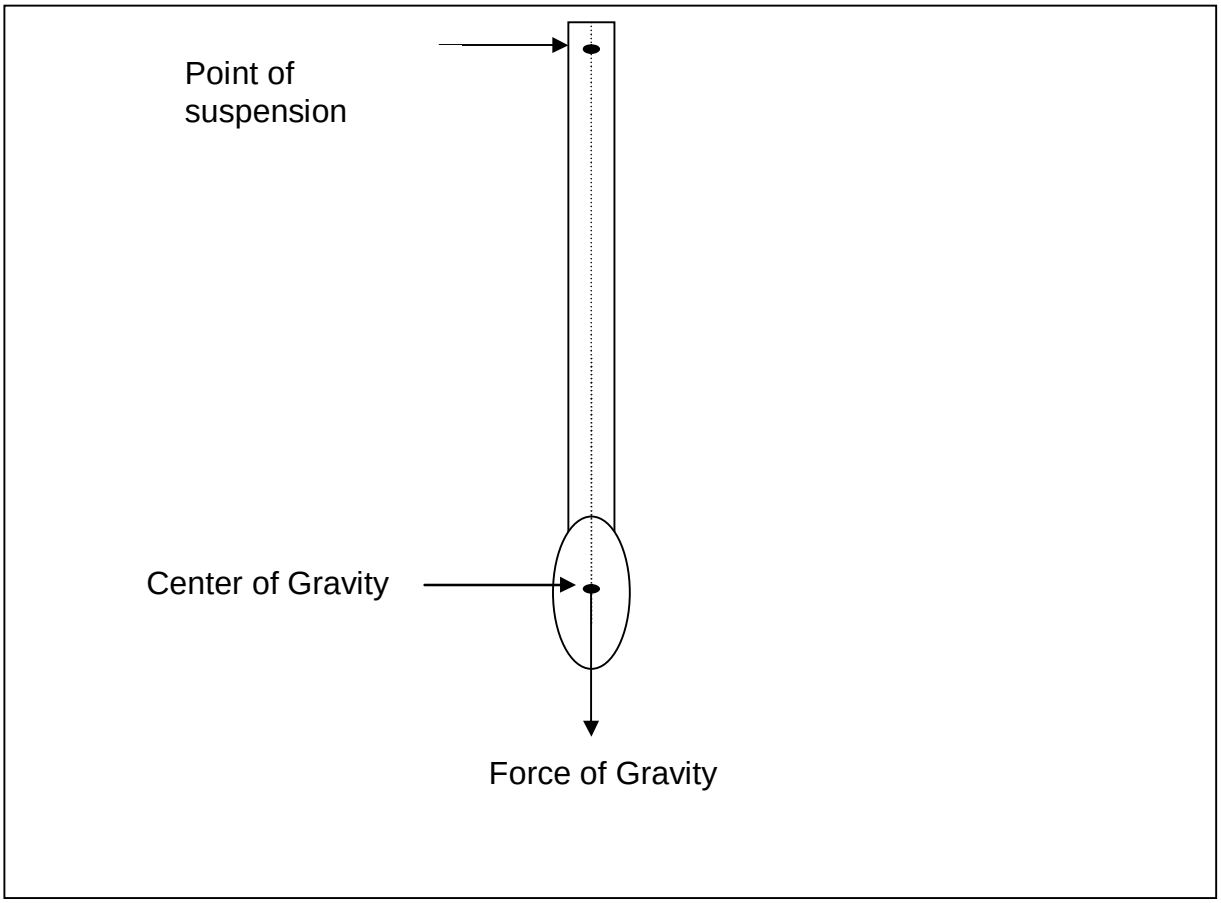

11.7 What is the purpose of the tail of a kite?

The tail of a kite causes the center of gravity of the kite to be below the force lifting the kite, thereby stabilizing it in flight.

11.8 Do you get more sugar to the kilogram in Calcutta, India than in Aberdeen, Scotland when using a <u>beam</u> balance? When using a <u>spring</u> balance?

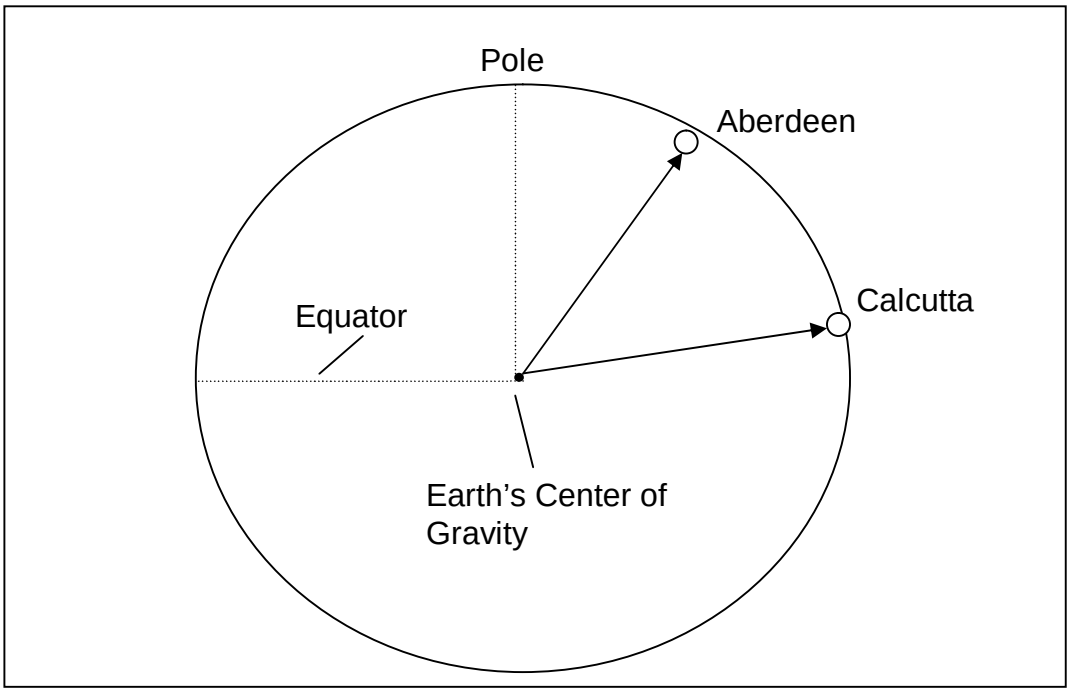

The distance from the center of gravity of the earth to the equator is longer than from the center of gravity of the earth to the North Pole or the South Pole. The earth is not a sphere. We call the earth an ellipsoid. The distance from the center of gravity of the earth to Calcutta is longer than from the center of gravity of the earth to Aberdeen. The force of gravity at Calcutta is weaker than the force of gravity at Aberdeen because Calcutta is farther from the center of gravity of the earth than Aberdeen is.

The force of gravity acts on both sides of the balance equally when we use a beam balance.

If we place a standard 1 kilogram weight on the balance at Calcutta and balance the beam with sugar the Kilogram weight will be pulled toward the center of gravity of the earth with the same force as the sugar. At Aberdeen, the force of gravity acting on both the 1 kilogram weight and the sugar is stronger than at Calcutta, but it is equal on both sides of the beam. This is why when using a beam balance the same amount of sugar is required to balance the 1 kilogram weight, regardless of where the beam balance is used.

When we use a spring balance, the force of the spring remains constant. If we place a standard 1 kilogram weight on the spring balance at Calcutta, the standard 1 kilogram weight will be pulled less against the spring than would be the case at Aberdeen. It takes **more** sugar to cause the spring balance to read 1 kilogram at Calcutta than it does at Aberdeen, because the force of gravity at Calcutta is less than it is at Aberdeen.

11.9 What change would there be in your weight if your mass were to become four times as great and that of the earth three times, the radius of the earth remaining the same?

The force of gravity acting between two bodies (the earth and your body in this case) is equal to the product of the universal gravitational constant, G, multiplied by the masses of both of the bodies; this answer is then divided by the square of the distance between the two bodies. Mathematically stated: $F = \frac{G \times m_1 \times m_2}{D^2}$.

If the first mass becomes four times as great and the second mass becomes three times as great, the answer will be twelve times as great.

11.10 The pull of the earth on a body at the earth's surface is 100 kilograms. The radius of the earth is about 4000 miles. Find the pull of the earth on the same body 4000 miles above the surface of the earth.

The distance between the bodies has doubled, or become 2 times as far as before.

Two squared, 2^2, or 2x2=4. Because in the formula $F = \frac{G \times m_1 \times m_2}{D^2}$ we divide by the square of the distance, the force of gravity between the two bodies must now be only ¼ as much as it originally was. One-fourth of 100 kilograms is only 25 kilograms.

At 1000 miles above the surface of the earth the new distance would be 5000 miles. This is 5000 divided by 4000 or 1.2 times the original distance between the bodies.

1.2 squared is1.44. When we divide the original force of gravity, 100 kilograms, by 1.44 we find that the new force of gravity is only 64 kilograms.

At only three miles above the surface of the earth, the new distance would be 4003/4000 times as much as the original distance between the bodies, or 1.00075 as much. $1.00075^2 = 1.0015$. Dividing 100 kilograms by 1.0015 shows that at only three miles above the surface of the earth the force of gravity now only pulls on the body with a force of 99.85 kilograms. At three miles of altitude, the 100 kilogram mass has already lost 0.15 kilograms, or 150 grams, of weight.

12. FALLING BODIES

To understand falling bodies we must first understand a few physical concepts.

A force must act on a body to cause its velocity to change. Changing the velocity of a body from its starting velocity to its end velocity can not be done immediately, meaning that it takes time to cause any velocity change. If we know the difference between the starting and final velocity of a body, and we know how much time was required for the force applied to the body to change its velocity from its starting velocity to its final velocity, we can make a relationship between the velocity change and the time required to cause it. We subtract the starting velocity from the final velocity, and divide this answer by the amount of time required to cause the velocity change. We call this relationship **acceleration**.

$$Acceleration = \frac{FinalVelocity - StartingVelocity}{Time}$$

12.1 If a body starts from rest and travels with a constant acceleration of 10 ft/s², how fast will it be going at the close of the fifth second?

v = velocity

a = acceleration

t = time

$v = a \times t$. Velocity is equal to acceleration multiplied by time.

$v = \frac{10\,ft}{s^2} \times \frac{5s}{1} = \frac{50\,ft}{s}$. At the end of the 5 seconds, the velocity of the body was 50ft/s.

The starting velocity was 0 ft/s. The final velocity was 50 ft/s. We can not use these values of velocity to find out how fast or how far the body traveled at a particular time because they are only true for two known times. To find out how fast the body is moving or how far the body moved at <u>any</u> particular time, we need to know the average velocity of the body between the starting and final times.

$V_{average} = \frac{V_{final} - V_{starting}}{2}$. $V_{average} = \frac{50\,ft/s - 0\,ft/s}{2}$. The average velocity was 25 ft/s.

How far did the body travel in the 5 second time period?

s=distance

v=velocity

t=time

$s = v \times t$. Distance is equal to velocity multiplied by time. The average velocity was 25 ft/s. The time the body traveled this average velocity was 5 seconds. The Distance the body traveled was 25 ft/s multiplied by 5s, or 125 feet.

If a velocity change of a body is the same for each equal time period of change, we call this relationship **uniform acceleration**. For example, if a body experiences a velocity change of 20 meters/s for each of five consecutive seconds, we say that the body had a uniform acceleration of $\frac{20m/s}{5s}$, which is equal to 4 m/s².

12.2 A body starting from rest and moving with uniformly accelerated motion acquired a velocity of 60 ft/s in 5seconds. Find the acceleration of the body.

$a = \frac{v}{t}$. The acceleration of the body is 60ft/s divided by 5 s, which is $\frac{12\,ft}{s^2}$.

How far did the body travel at the end of the first second; at the end of the fourth second; at the end of the fifth second?

s=distance

a=acceleration (uniform acceleration or average acceleration)

t=time

Distance is equal to one-half of the uniform acceleration multiplied by the time squared.

$s = \frac{a \times t^2}{2}$.

At the end of the first second the body moved $\frac{1}{2} \times \frac{12\,ft}{s^2} \times 1s^2 = 6\,ft$.

At the end of the fourth second the body moved $\frac{1}{2} \times \frac{12\,ft}{s^2} \times 4s^2 = 98\,ft$.

At the end of the fifth second the body moved $\frac{1}{2} \times \frac{12\,ft}{s^2} \times 5s^2 = 150\,ft$.

***Uniform acceleration can cause bodies to travel great distances in a short amount of time**.

12.3 A body moving with uniformly accelerated motion traveled 6 ft during the first second. Find its velocity at the end of the fourth second.

If the body moved 6 feet in the first second and its acceleration is uniform, then its velocity at the end of this second will be 6ft/s. The body acquired this velocity in one second, so its acceleration is 6ft/s divided by 1second, or 6ft/s/1s=6ft/s².

a=acceleration

v=velocity

t=time

$v = a \times t$. At the end of the fourth second the body had acquired a velocity of 6ft/s² multiplied by 4s, or $\frac{6\,ft}{s^2} \times \frac{4s}{1} = \frac{24\,ft}{s}$.

How far did the body travel during the first four seconds?

$s = \frac{a \times t^2}{2}$. The distance the body traveled is $\frac{1}{2} \times \frac{6\,ft}{s^2} \times \frac{16s^2}{1} = 48\,ft$.

12.4 A ball thrown across the ice started with a velocity of 80ft/s. It was retarded by friction at the rate of 2ft/s².How far did it roll?

$v = a \times t$, so $t = \frac{v}{a} = \frac{80\,ft/s}{2\,ft/s^2} = 40s$. $s = \frac{a \times t^2}{2} = \frac{2\,ft/s^2 \times (40s)^2}{2} = 1600\frac{ft}{s^2} \times \frac{s^2}{1} = 1600\,ft$.

12.5 A bullet was fired with a velocity of 2400 ft/s from a rifle having a barrel 2ft long. Find the average velocity of the bullet while moving the length of the barrel.

$$V_{average} = \frac{V_{final} - V_{starting}}{2} = \frac{2400\,ft/s - 0\,ft/s}{2} = \frac{2400\,ft/s}{2} = 1200\,ft/s.$$

The time to move through the barrel is $t = \frac{s}{v_{average}} = \frac{2\,ft}{1200\,ft/s} = \frac{1}{600}s.$

The acceleration of the bullet while it was in the barrel was

$$a = \frac{v_{final}}{t} = \frac{2400\,ft/s}{1/600s} = \frac{2400}{\frac{1}{600}} \times \frac{600}{600} \times \frac{\frac{ft}{s}}{\frac{s}{1}} \times \frac{s}{s} = \frac{1{,}440{,}000}{1} \times \frac{ft}{\frac{s^2}{1}} = 1{,}440{,}000\,ft/s^2.$$

12.6 A ball was thrown vertically into the air with a velocity of 160 ft/s. How long did it remain in the air?

$v_{up} - g \times t_{up} = 0$.

$-gt_{up} = -v_{up}$.

$t_{up} = \frac{v_{up}}{g}$; g = 32ft/s². $t_{up} = \frac{160\,ft/s}{32\,ft/s^2} = 5s.$

t_{up} = 5s, one half of the total time the ball was in the air, because it took as long for the ball to climb up as it took for the ball to fall back to the ground. The ball therefore remained in the air for 10 seconds.

12.7 A baseball is thrown upward. It remained in the air 6 seconds. With what velocity did it leave the hand?

If the ball remained in the air for 6 seconds, half of this time it was going upward and the other half of this time it was going downward. $t_{up} = 3s$.

$$\frac{v_{start}\,ft}{s} = \frac{gft}{s^2} \times \frac{t_{up}s}{1} = \frac{32\,ft}{s^2} \times \frac{3s}{1} = \frac{96\,ft}{s}.$$

How high did the baseball go?

Method 1:

s=1/2 a t². $s = \frac{1}{2} \times \frac{32\,ft}{s^2} \times (3s)^2 = \frac{1}{2} \times \frac{32\,ft}{s^2} \times \frac{9s^2}{1} = \frac{1 \times 32 \times 9}{2 \times 1}\frac{ft}{1}\frac{s^2}{s^2} = 16 \times 9\frac{ft}{1} \times 1 = 144\,ft$.

Method 2:

$v_{start} = 96\frac{ft}{s}$. $v_{top} = 0\frac{ft}{s}$. $v_{average} = \frac{v_{start} - v_{top}}{2} = \frac{96-0}{2}\frac{ft}{s} = 48\frac{ft}{s}$. The height reached is equal to $v_{average} \times t_{up} = \frac{48\,ft}{s} \times \frac{3s}{1} = \frac{48 \times 3}{1}\,ft \times \frac{s}{s} = 144\,ft \times 1 = 144\,ft$.

12.8 A man dropped a ball from the top of the Woolworth building in New York City, 780 feet above Broadway. How many seconds did it fall?

$$s = \frac{1}{2}at^2; \quad t = \sqrt{\frac{2s}{g}} = \sqrt{\frac{2 \times 780\,ft}{\frac{32\,ft}{s^2}}} = \sqrt{\frac{2 \times 780\,ft \times s^2}{32\,ft}} = \sqrt{\frac{780s^2}{16}} \cong 7s.$$

With what velocity did the ball strike Broadway?

$$v_{end} = a \times t = \frac{32\,ft}{s^2} \times \frac{7s}{1} \cong \frac{224\,ft}{s} \times \frac{3600s}{h} \times \frac{1mi}{5280\,ft} = \frac{153mi}{hr} \times \frac{1.6km}{mi} = \frac{245km}{h}.$$

12.9 A bomb fell 10 seconds from an airplane before striking the ground. How high was the airplane?

$$s = \frac{1}{2}at^2 = \frac{1}{2}gt^2 = \frac{1}{2} \times \frac{9{,}81m}{s^2} \times [10s]^2 = \frac{1 \times 9.81 \times 100}{2}\frac{m}{1} \times \frac{s^2}{s^2} = \frac{981}{2}\frac{m}{1} \times 1 \cong 490m \times \frac{3.27\,ft}{m} \cong 1600\,ft$$

12.10 What speed does a steel ball reach before striking the earth if it is dropped from the Eiffel Tower, 335 meters high?

$$g = 9.81m/s^2. \quad h = 335m. \quad h = \frac{1}{2} \times g \times t^2. \quad t = \sqrt{\frac{2h}{g}} = \sqrt{\frac{670m}{\frac{9.81m}{s^2}}} = \sqrt{\frac{670m \times s^2}{9.81m}} = 8.26s.$$

$$v_{end} = g \times t = \frac{9.81m}{s^2} \times [8.26s] = \frac{9.81m}{s^2} \times \frac{8.26s}{1} = \frac{81m}{s} \times \frac{1km}{1000m} \times \frac{3600s}{h} \cong \frac{290km}{h}.$$

12.11 If the acceleration of a marble rolling down an inclined plane is 20cm/s², what velocity will it have at the bottom, the plane being 7 meters long?

$$s = \frac{1}{2}at^2. \quad t = \sqrt{\frac{2s}{a}} = \sqrt{\frac{2 \times 700cm}{\frac{20cm}{s^2}}} = \sqrt{\frac{2 \times 700cm \times s^2}{20cm}} = \sqrt{\frac{70s^2}{1}} \cong 8.36s.$$

$$v_{end} = a \times t = \frac{20cm}{s^2} \times \frac{8.36s}{1} \cong \frac{167cm}{s}.$$

12.12 If a man can jump 3 feet high on the earth, how high could he jump on the moon, where g is 1/6 as much?

If the downward force of gravity on the moon is only one-sixth as much as on the earth, then the man can jump six times as high on the moon as he can on the earth. Six times three feet is 18 feet.

12.13 The brakes were set on a train running 60 miles per hour. The train stopped 20 seconds later. Find the deceleration in ft/s², and the distance the train traversed after the brakes were applied.

$$v = \frac{60mi}{h} \times \frac{1h}{3600s} \times \frac{5280\,ft}{1mi} = \frac{88\,ft}{s}. \quad a = \frac{v_{end} - v_{start}}{t} = \frac{\frac{0-88\,ft}{s}}{20s} = \frac{-88\,ft}{20s^2} = \frac{-4.4\,ft}{s^2}.$$

The train decelerated 4.4 ft/s².

$$s = \frac{1}{2}at^2 = \frac{1}{2} \times \frac{4.4\,ft}{s^2} \times [20s]^2 = \frac{2.2\,ft}{s^2} \times \frac{400s^2}{1} = 880\,ft.$$

The train traveled 880 feet from the time the brakes were applied until it stopped.

12.14 How far will a body fall from rest during the first half-second?

In the English system $= \frac{1}{2}gt^2 = \frac{1}{2} \times \frac{32\ ft}{s^2} \times [0.5s]^2 = \frac{16\ ft}{s^2} \times \frac{0.25\,s^2}{1} = 4\ ft.$

In the metric system $s = \frac{1}{2}gt^2 = \frac{1}{2} \times \frac{9.81m}{s^2} \times [0.5s]^2 = \frac{4.905m}{s^2} \times \frac{0.25s^2}{1} = 1.226m.$

12.15 With which velocity must a ball be shot upward to reach a height of 555 feet?

$$s = \frac{1}{2}gt^2. \ t_{up} = \sqrt{\frac{2s}{g}} = \sqrt{\frac{1110\,ft}{\frac{32\,ft}{s^2}}} = \sqrt{34.68s^2} \cong 5.9s. \ v_{up} = g \times t = \frac{32\,ft}{s^2} \times \frac{5.9s}{1} = 188\frac{ft}{s}.$$

How long will the ball remain in the air before it returns?

$t_{total} = 2 \times t_{up} = 2 \times 5.9s = 11.8s$.

12.16 What force supports an airplane in flight?

The air resistance R acting on its wings supports an airplane in flight.

$R = kAV^2 i$. $k \cong 0.005$. A is the area of the wings. V is the velocity of the airplane. $i = the\_angle\_of\_incidence\_of\_the\_wings\_with\_the\_air\_flow$.

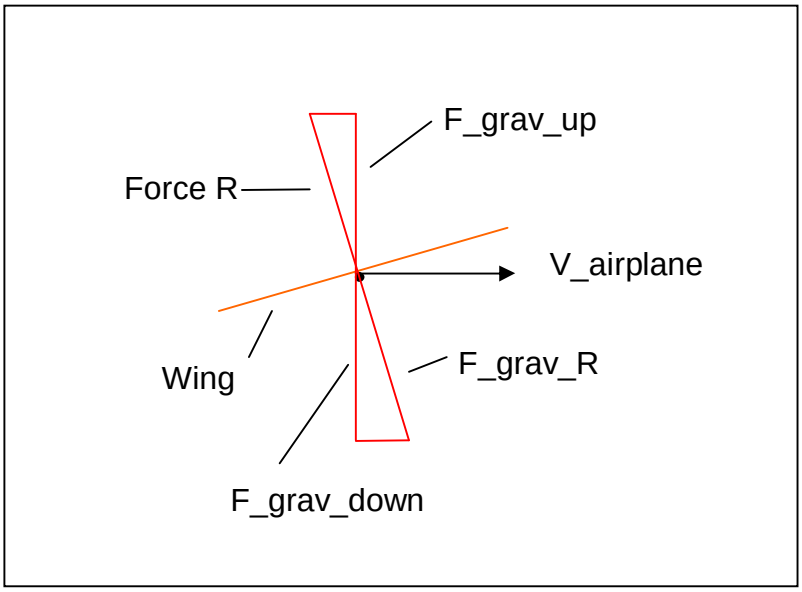

12.17 A clock that makes a certain swing (1/2 period) per second in New York City is 99.3 cm (=39.1 inches) long. Account for the fact that this same pendulum at the equator must be 39 inches long, while at the earth's poles it must be 39.2 inches long.

The length of the pendulum in a pendulum clock determines the number of "steps" that will occur during each time interval. Increasing the length of the pendulum will decrease the rate of the clock. Decreasing the length of the pendulum will increase the rate of the clock.

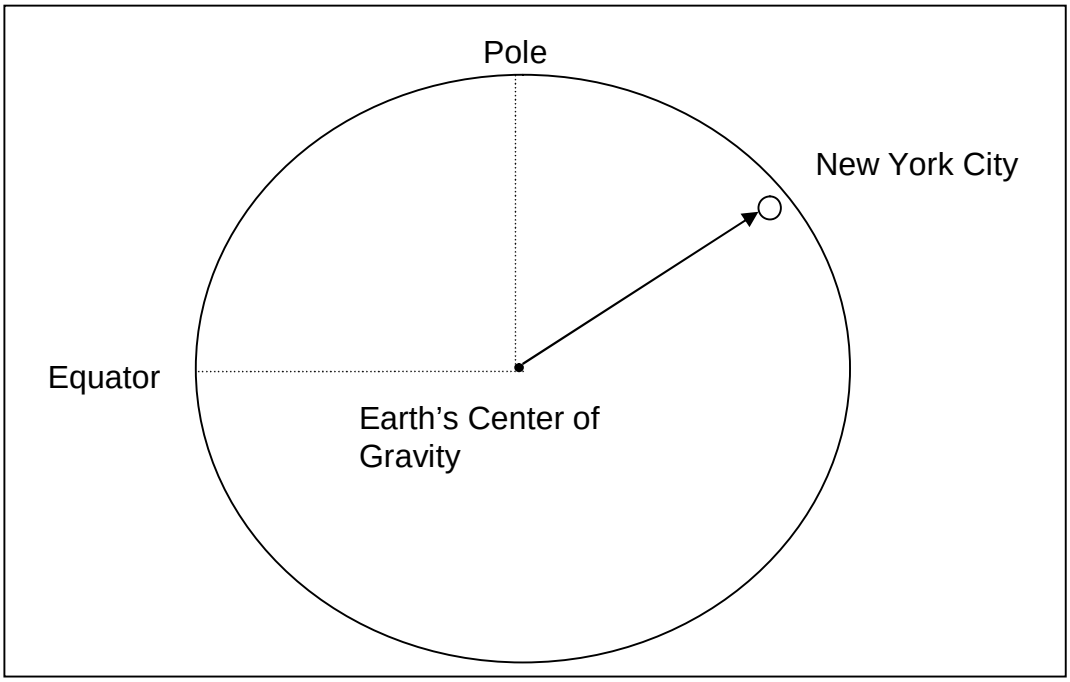

The radius of the earth at its poles is shorter than the radius of the earth at the equator. The force of gravity at the poles is therefore stronger than at the equator. $F_{grav\_pole} \succ F_{grav\_equator}$.

At the poles the length of the pendulum must be longer than at New York City to make the clock interval one second in duration; at the equator the length of the

pendulum must be less than at New York City to make the clock interval one second in duration.

12.18 The swing of a pendulum is equal to one-half of the period of a pendulum. How long is the pendulum having a period of 3 seconds, of ½ second, of 1/3 second?

The formula for determining the swing of a pendulum is $t = \Pi \times \sqrt{\frac{l}{g}}$.

In this formula, l is the length of the pendulum, and g is the acceleration of gravity.

Reforming this formula to obtain l, we find that $l = \frac{g \times t^2}{\Pi^2}$.

For a 3 second period pendulum, $t = 1.5$, so $l = \frac{980\frac{cm}{s^2} \times \left[\frac{1.5s}{1}\right]^2}{\Pi^2}$ =223.425cm.

For a 1/2 second period pendulum, $t = 0.25$, so $l = \frac{980\frac{cm}{s^2} \times \left[\frac{0.25s}{1}\right]^2}{\Pi^2}$ =6.206cm.

For a 1/3 second period pendulum, $t = 0.166$, so $l = \frac{980\frac{cm}{s^2} \times \left[\frac{0.166s}{1}\right]^2}{\Pi^2}$ =2.758cm.

We can make a simpler formula to find the length of a pendulum in centimeters of any period using the above formula $l = \frac{g \times t^2}{\Pi^2}$. We substitute $\frac{T}{2}$ for t in the formula to obtain the formula $l = \frac{g \times \left[\frac{T}{2}\right]^2}{\Pi^2} = \frac{gT^2}{4\Pi^2} = \frac{980\frac{cm}{s^2}}{4\Pi^2} \times T^2 s^2 = 24.825\frac{s^2}{cm} \times T^2 cm$.

***The length of the pendulum in centimeters is found by the formula $l = 24.825 \times T^2 cm$.**

A 2 second period pendulum has the length $l = 24.825\frac{cm}{s^2} \times 4s^2 = 99.3cm$ = 39.1in.

A 3 second period pendulum has the length $l = 24.825\frac{cm}{s^2} \times 9s^2 = 223.425cm$ = 87.962in.

A 1/2 second period pendulum has the length $l = 24.825\frac{cm}{s^2} \times 1/4s^2 = 6.206cm$ = 2.443 in.

A 1/3 second period pendulum has the length $l = 24.825\frac{cm}{s^2} \times 1/9s^2 = 2.758cm$ = 1.085in.

The length of the pendulum in inches is found by dividing its length in centimeters by 2.54.

12.19 A man was let down over a cliff with a rope to a depth of 500 ft. What was his period as a pendulum?

$$\frac{500\,ft}{1}\times\frac{12in}{1\,ft}\times\frac{2.54cm}{1in}=15240cm\,.\;\; l=24.825\times T^2cm$$

$$T^2=\frac{l}{24.825}s^2=\frac{15240}{24.825}s^2=613.89s^2\Rightarrow T=\sqrt{613.89s^2}\cong 24.8s$$

13. NEWTON'S LAWS OF MOTION

Newton's First Law.

When any object is moving, it resists any change to the direction it is moving or the velocity with which it is moving. The object has mass and it has a velocity. We call the body's momentum its mass multiplied by its velocity.

***1. Every object tends to stay at rest or to move uniformly in a straight line unless an external force causes it to change its state. This property that all bodies have of resisting any force trying to change their state (meaning to change their motion or direction of motion) is called inertia.**

A body has a 5 kilogram mass and is moving 20 meters each second; its momentum is $5kg \times \frac{20m}{s} = \frac{100kg \cdot m}{s}$.

A body has a 4 pound mass and is moving 2 feet each second; its momentum is $4lb \times \frac{2\,ft}{s} = \frac{8\,ft \cdot lb}{s}$.

Newton's Second Law.

***2. The rate of change of momentum is proportional to the force acting, and the change takes place in the direction in which the force acts.**

If we have two identical masses, and we apply a force to the first mass, and a second force that is twice as large as the first force to the second mass, the amount of momentum that is given to the second mass is twice as great as the amount of momentum given to the first mass.

Newton's Third Law.

If one object experiences a change in its momentum, another object experiences an equal and opposite change in its momentum.

When one ball strikes another ball, one ball gains momentum, and the other ball loses momentum.

***3. To every action there is an equal and opposite reaction.**

13.1 What principle is applied when tightening the head of a hammer by pounding on the handle?

Newton's third law, "every action has an equal and opposite reaction". Pounding on the handle imparts a momentum to the handle. The handle imparts a momentum to the hammer head. The momentum of the hammer head is exactly opposite to the momentum of the handle. The handle and the hammer head push against each other with equal and opposite forces, tightening the head of the hammer on the inclined plane of the hammer handle.

13.2 What keeps the car from falling when it is at position B?

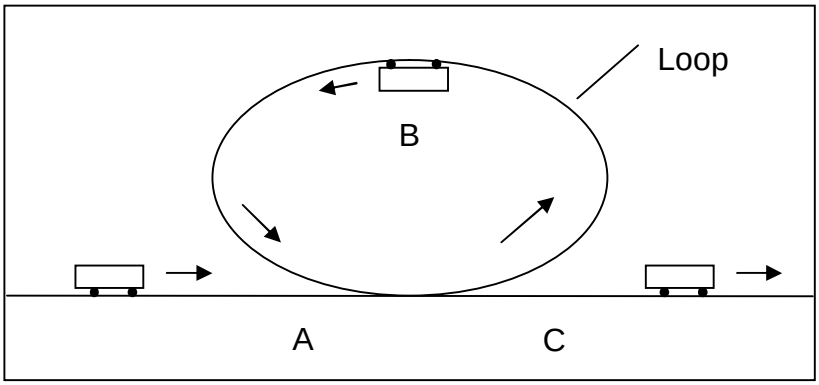

The car at position B is moving along the circumference of a curve. It is pushed upward by a force called centrifugal force, which is caused by the loop. The centrifugal force acting on the car at position B, because of the loop, is constantly changing the direction of the car, but not its momentum (this is true because the centrifugal force is always acting at right angles to the length of the car, so there is no component of centrifugal force that could change the velocity of the car). The car loses velocity when it climbs from the level ground at position A to position B against the force of gravity, which decreases the cars momentum. The car must, therefore, have a momentum larger than the change in momentum caused by the force of gravity if it is to remain on its path at position B.

13.3 Why does a flywheel cause machinery to run more smoothly?

The inertia of the flywheel resists changes to its momentum caused by jerky or irregular movements in the machinery. The small forces acting to cause small changes in the momentum of the moving parts of the machine are therefore not so easily noticed.

A small momentum being transferred to a massive flywheel only allows the flywheel's velocity to change a small amount, holding the rotational speed of the flywheel almost constant.

13.4 Balance a small card on your finger and then place a coin on it so that the coin is also balanced on your finger. Snap the card away quickly with the fingers of your other hand and note that the coin remains balanced on your finger. What principle is illustrated?

The coin resists the pull of the card on its underside, which is trying to change the coins velocity and direction. The coin remains where it is. This illustrates the principle of inertia. *The property that all bodies have of resisting any force trying to change their state (meaning to change their motion or direction of motion) is called* ***inertia.***

13.5 Is it any easier to walk toward the rear than toward the front of a rapidly moving train?

If you are standing still in the train, you have the mass of your body and the velocity of the train, which determine your momentum.

If you try to walk toward the front of the train, you do not change your mass, but you <u>increase</u> your velocity in the direction of movement of the train by the speed you walk. You increase your momentum.

If you try to walk toward the back of the train, you do not change your mass, but you decrease your velocity in the direction of movement of the train by the speed you walk. You decrease your momentum.

The amount of change in your momentum is the same in each case, but they are opposite in direction, so the force that caused the change in momentum in each case is equal, but it is opposite in direction.

It is not more difficult to walk toward the front of the train than to walk toward the rear of the train. Both are equally difficult.

13.6 Suspend a weight by a string. Attach a piece of the same string to the bottom of the weight. If the lower string is pulled with a sudden jerk, it breaks, but if it is pulled steadily, the upper string will break. Why?

The upper string is subject to a force that is more than the force acting on the lower string (the weight plus the pull on the lower string).

The lower string is only subject to the force pulling on it.

If the lower string is pulled steadily, the force acting on the upper string is greater, and it will break first.

If the lower string is jerked rapidly, the weight will resist this attempt to change its momentum. Now the force acting on the lower string is greater than the force acting on the upper string, and the lower string breaks first.

13.7 Where does a body weigh more, at the poles or at the equator? Give two reasons why.

***Reason 1. The radius of the earth is shorter at the poles than at the equator, causing the force of gravity to be greater at the poles than at the equator.**

***Reason 2. A centrifugal force that opposes the force of gravity acts on all bodies on the earth that are not located at one of the earth's poles. This force is caused by the rotation of the earth toward the east; it is greatest at the equator. The resultant force of adding the force of gravity and the centrifugal force is therefore smallest at the equator.**

Because there is no component of the earth's centrifugal force at the poles, the force of gravity is not decreased by the earth's centrifugal force there.

13.8 Three trains are all running at the velocity of 60 kilometers per hour.

What is the velocity of train A with reference to train B, to train C?

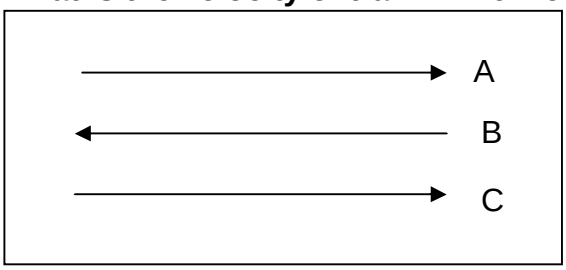

Train A is moving 120 kilometers per hour in relation to train B; it is moving 0 kilometers per hour with relation to train C.

13.9 If a weight is dropped from the roof to the floor of a moving train car, will it strike the point on the floor which was directly beneath its starting point?

Yes, because the downward force of gravity acting on the weight is at a right angle to the direction of velocity of the weight; there is no component of the force of gravity that can change the weight's velocity in the direction the train is moving. The weight continues moving at the same velocity of the train in the direction of the train. The weight moves in the direction of the train just as far as the floor of the train moves in the direction of the train while the weight is dropping. The weight strikes the floor of the train at the spot on the floor that was directly beneath the weight before the weight was dropped.

13.10 Why is a train track banked toward the inside of the curve when it turns to change directions?

When a train enters a curve, a centrifugal force pushes the train toward the <u>outside</u> of the curve; if the centrifugal force is strong enough, it can push the train off the track toward the outside of the curve. The track is banked toward the <u>inside</u> of the curve to produce a component of the downward force of gravity that acts in a direction opposite to the direction of the centrifugal force. The degree of banking can be set to offset the centrifugal force for the velocity of the train as it makes its turn; this keeps the train on the track.

13.11 If the earth were to stop rotating, would objects at the equator weigh more or less? Why?

The weight of objects at the equator would become more, because the centrifugal force acting on the bodies at the equator that opposes the force of gravity would disappear; this increases the effect of gravity on all objects, not only at the equator, but at any location on the earth except at the earth's poles. See also problems 11.8 and 12.17.

13.12 How is Newton's third law involved in rotary lawn or irrigation sprinklers?

***3. To every action there is an equal and opposite reaction.**

The water stream hits the paddle, imparting momentum to the paddle which rotates the paddle away from the water stream. The back side of the paddle hits the rotateable water nozzle, imparting momentum to it, causing it to rotate a little. A spring then moves the paddle back into the stream of water again, and the cycle repeats itself.

The momentum of the moving water imparts momentum to the paddle which moves it. An arm on the back side of the paddle strikes the rotateable water nozzle and imparts momentum to it, causing it to rotate. If we neglect friction, the momentum the water imparted to the paddle is equal to the momentum the paddle imparted to the water nozzle. The spring exerts a small force on the paddle to turn it into the water stream again.

13.13 How does a clothes drying centrifuge work?

The centrifuge is a large cylinder having holes in its side that is rotated by a motor at high speed.

Centrifugal force acts on the clothes and the water molecules in them, pressing them against the inside wall of the cylinder. The clothes remain in the cylinder, but the momentum imparted to the water molecules causes them to flow through the holes in the cylinder wall and then away from the cylinder on paths tangential to the cylinder. Most of the water is removed from the clothes, and they dry quickly after being removed from the centrifuge.

13.14 Explain how reaction pushes an ocean liner or an airplane forward.

The propeller which is attached to a ship (airplane) imparts momentum to water (air). The water (air) pushes back with equal momentum on the ship (airplane).

The mass of the water (air) is greater than the mass of the ship (airplane); so the velocity of the water (air) is less than the velocity of the ship (airplane).

The ship moves forward in the water. The airplane moves forward in the air.

13.15 If one ball is thrown horizontally from the top of a tower, and another is dropped from the tower at the same time, which will strike the earth at the bottom of the tower first?

Neither. The ball that is thrown horizontally has no component of velocity toward the earth. Gravity pulls both balls downward with the same acceleration, and each ball strikes the earth at the same time with the same downward velocity (the ground is completely level under the tower).

13.16 If a rifle bullet were fired with a velocity of 300 meters per second from a tower having a height of 19.6 meters, how far would it strike the earth away from the base of the tower if there were no air resistance?

$s = \frac{gt^2}{2} \Rightarrow \frac{t^2}{1} = \frac{2s}{g} \Rightarrow \frac{t}{1} = \sqrt{\frac{2s}{g}} = \sqrt{\frac{2 \times 19.6m}{9.8\frac{m}{s^2}}} = \sqrt{4s^2} = 2s$. It takes two seconds for the bullet to fall from the top of the tower to the bottom of the tower. The horizontal distance the bullet traveled is its horizontal velocity multiplied by the time it took until the bullet fell to the earth.

$s_{horizontal} = v_{horizontal} \times t_{fall} = \frac{300m}{s} \times 2s = 600m$. The bullet traveled 600 meters before it struck the earth.

13.17 The hydraulic ram is a practical illustration of the principle of inertia. With its aid, water from a pond can be raised into a tank that stands at a higher level than the pond. Explain how it works.

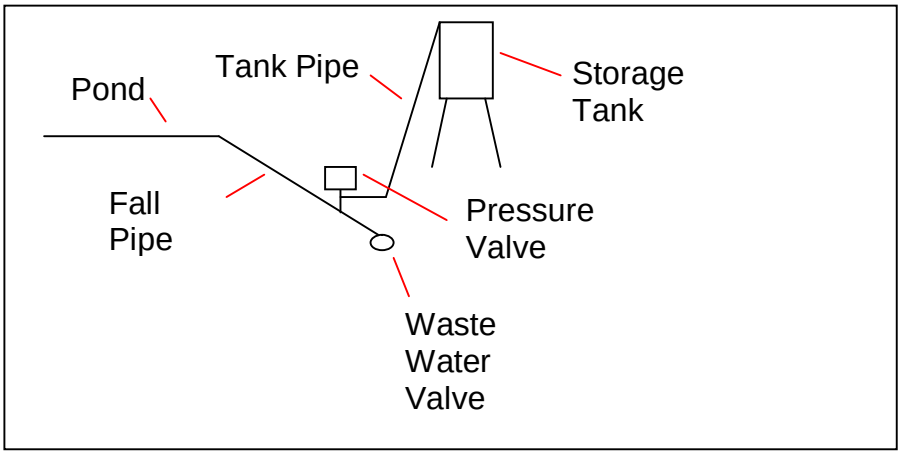

Water from the pond flows down the fall pipe to its end and exits the fall pipe through a waste water valve. When the water flows through this pipe fast enough, the waste water valve snaps quickly shut and a high pressure impulse builds up in the fall pipe that immediately opens the pressure valve. This pulse is caused by the inertia of the water moving in the fall pipe, which acts like a solid ram. Water is forced past the pressure valve, and moves through the tank pipe to the top of the tank where the tank is filled.

Now we want to know how the system works in detail according to the laws of physics.

Assume that the fall pipe is a 2 inch pipe having a cross sectional area of 20 cm². The length of the fall pipe is 15 meters, or 1,500cm. The volume of water in the fall pipe is then 20cm² multiplied by 1,500cm, which is equal to 30,000cm³.

1000cm³ of water weighs one kilogram, so the mass of the water in the fall pipe is 30 kilograms of water when water is flowing through it and it is full.

Assume the velocity of the water flowing inside of the fall pipe is 2 meters per second. The momentum of the water flowing in the fall pipe is then the mass of the water in this pipe multiplied by its velocity,

or $Momentum_{FallPipeWater} = \frac{30kg}{1} \times \frac{2m}{s} = 60\frac{kg \cdot m}{s}$.

When the velocity of the water flowing through the fall pipe reaches $\frac{2m}{s}$, the waste water valve snaps shut. A force builds up in this pipe, caused by the inertia of the water moving inside it that causes the pressure valve to open. Water now flows through the pressure valve and into the housing above it until the velocity of the water in the fall pipe has changed to zero. When this happens, the pressure valve closes again.

Let us assume that the time it took for the velocity of the water in the fall pipe to change from $\frac{2m}{s}$ to $\frac{0m}{s}$ is only ¼ of a second.

When we divide momentum by time we obtain a force. A force has the units $\frac{kg \cdot m}{s^2}$, because force is equal to mass times acceleration.

The force that builds up in the pipe is equal to

$$F_{FallPipe} = \frac{60kg \cdot m}{s} \div \frac{1s}{4} = \frac{60kg \cdot m}{s} \times \frac{4}{s} = 240\frac{kg \cdot m}{s^2} = 240Newtons\ .$$

This 240 Newton force is directed against the end of the fall pipe, which has a cross sectional area of 20cm².

A 240 Newton force, acting on an area of 20cm², produces a pressure of $P_{FallPipe} = \frac{240N}{20cm^2} = 12\frac{N}{cm^2}$. This is the pressure above the pressure valve by the time the velocity of the water in the fall pipe has changed to zero. The pressure above the pressure valve is now greater than the pressure below the pressure valve, and the pressure valve closes, holding this pressure in the housing above the pressure valve. This is the pressure available to push water up the tank pipe and into the supply tank.

A ten meter high column of water in the tank pipe having a cross sectional area of 1cm² has a mass of 1kg, because 1cm³ of water weighs 1 gram.

The force of gravity acting on this ten meter high column of water is equal to the mass of the water column multiplied by the gravitational acceleration acting on it, or $F_{Gravity\_on\_water} = \frac{1kg}{1} \times \frac{9.81m}{s^2} = \frac{9.81k \cdot gm}{s^2} = 9.81N$.

The downward force due to gravity on the ten meter high column of water is 9.81N.

The upward force required to hold this ten meter high water column in place is therefore also 9.81N.

The upward force acting on the ten meter high column of water is 12N.

It is $\frac{12N}{9.81N} = 1.223$ times as strong as the force of gravity acting on the column.

The height of water that can be sustained by this force is $12N \div \frac{9.81N}{10m} = \frac{12N}{1} \times \frac{10m}{9.81N} = \frac{120m}{9.81} = 12.23m$.

This particular hydraulic ram should be able to push water 12.23 meters above the pressure valve.

If the pressure valve is two meters below the pond, we should be able to fill a tank to a height of 10.23 meters above the pond.

There are always losses of efficiency in any system, however, and the real height that can be reached by this system will be less than 10.23 meters above the pond.

13.18 If two men were standing on a frictionless frozen pond, how could they get off of the pond?

If the two men push against each other a momentum will be imparted to each of them, causing them to move across the ice in opposite directions to another. Each man will eventually reach the edge of the pond.

Could one man get off of the ice if he were alone?

One man could take off his trousers and stuff his jacket into one of the legs. Using the other leg of the trousers he could swing the trousers around his head. Centrifugal force acting on the jacket will pull against the mass of his body giving him momentum, which will cause him to move across the ice. Once he is moving he can

stop swinging the trousers and his jacket. He will then move in a straight line until he reaches the edge of the pond.

13.19 If a 10 g bullet is shot from a 5 kg gun with a velocity of 400 m/s, what is the backward velocity of the gun?

$$M_{bullet} \times V_{bullet} = M_{gun} \times V_{gun} \Rightarrow v_{gun} = \frac{M_{bullet} \times V_{bullet}}{M_{gun}} = \frac{\frac{10gm \times 400m}{s}}{5000gm} = \frac{4000gm \cdot m}{5000gm \cdot s} = \frac{4m}{5s} = \frac{0.8m}{s}$$

13.20 If a team of horses pulls 500lb when drawing a wagon, with what force does the wagon pull backward on the team?

The moving wagon pulls on the team with 500lb also, because every action has an equal and opposite reaction.

Why do the wheels turn before the hoofs of the horses slide?

The hoofs of the horses carry the weight of the horses on a small area, which creates a great pressure on the surface of the earth. The friction of the hoofs under this pressure on the earth is large, acting like an anchor in the earth.

The wagon wheel only experiences rolling friction on the surface of the earth and in the bearings on its axles. This friction is small compared to the friction of the horse's hoofs on the earth.

The force applied by the horses on the wagon is constant. Force is mass multiplied by acceleration, so the pulling force of the horses acting on the mass of the wagon causes the wagon to accelerate, i.e., to move in the direction of the horses while the horses are still standing with their hoofs on the earth. Once the wagon begins to move, the horses step forward. The force required to keep the wagon moving is less than the force required to start the wagon into motion, because the horses must initially overcome the inertia of the wagon before the wagon will move.

13.21 Why does a falling mass, on striking the earth, exert a force in excess of its weight?

Weight is the force caused by the earth's gravitational acceleration acting on a mass, $f = m \times g$.

When a mass falls, it acquires velocity which increases with the time of the fall. The mass therefore acquires momentum, mass times velocity, which increases with the time of the fall. When the mass strikes the earth its momentum changes in a very short time to become zero. We can call this time the time of deceleration $t_{deceleration}$.

The force that develops when a falling body strikes the earth is $f = \frac{m \times v_{final}}{t_{deceleration}}$.

The time $t_{deceleration}$ is very small. When it is divided into the body's final momentum, mv_{final}, a force results that is very large when compared to the force $f = m \times g$, the weight of the body's mass.

We note that the great force produced when a body strikes another body is mainly produced by the very short time of deceleration.

13.22 A force of 1 Newton acts for three seconds on a mass of 1 kilogram. What velocity is imparted to the mass?

$$F = m \times a \Rightarrow a = \frac{F}{m} = \frac{1N}{1kg} = \frac{\frac{1kg \cdot m}{s^2}}{1kg} = \frac{1kg \cdot m}{s^2} \times \frac{1}{1kg} = \frac{1m}{s^2}.$$

The mass was accelerated 1m/s².

Velocity is acceleration multiplied by time $v = a \times t_{acceleration} = \frac{1m}{s^2} \times \frac{3s}{1} = \frac{3m}{s}$.

The velocity imparted to the mass is 3meters per second.

13.23 How long must a 100 Newton force act on a 20 kilogram mass to impart a velocity of 40 meters/second to it?

$F = m \times a \Rightarrow a = \frac{F}{m} = \frac{100N}{20kg} = \frac{\frac{100kg \cdot m}{s^2}}{20kg} = \frac{5m}{s^2}$. The mass is accelerated to $\frac{5m}{s^2}$.

$v = a \times t \Rightarrow t = \frac{v}{a} = \frac{\frac{40m}{s}}{\frac{5m}{s^2}} = \frac{40m}{s} \times \frac{1s^2}{5m} = 8s$. The time of acceleration is 8 seconds.

13.24 A force of 1 Newton acts on 1 kilogram for 1 second. How far is the kilogram moved at the end of the second?

$F = m \times a \Rightarrow a = \frac{F}{m} = \frac{1N}{1kg} = \frac{\frac{1kg \cdot m}{s^2}}{1kg} = \frac{1m}{s^2}$. The mass is accelerated $\frac{1m}{s^2}$.

$s = \frac{a \times t^2}{2} = \frac{\frac{1m}{s^2} \times \frac{1s^2}{1}}{2} = \frac{1}{2}m$. The mass is moved a distance of ½ meter.

14. MOLECULAR FORCES IN SOLIDS

***Cohesive Forces: The forces that bind like kinds of molecules are called cohesive forces.**

***Adhesive Forces: The forces that bind unlike kinds of molecules are called adhesive forces.**

***Hardness: Substances that have the strongest cohesive forces will scratch substances that have less cohesive forces. The strongest cohesive forces are found in the diamond, which will scratch all other substances. This is what is meant when we speak of hardness.**

***Brittleness: If one substance breaks more easily than another when struck with a hammer, we say that the one that broke more easily is more brittle than the one that did not. Glass is more brittle than copper.**

***Ductility: If one substance can be drawn into a finer wire than another substance, we say that the substance that can be drawn into a finer wire is more ductile than the other.**

Great forces are usually required to pull the molecules of a solid object apart. If a solid is pulled apart by a strong enough force, we say that its limit of tenacity has been exceeded. Usually, some materials, like metals, stretch somewhat before their limit of tenacity is reached by applying a large enough force to them (like fixing one end of a metal wire and applying a force to its other end, for example).

When a material is stretched by a force, but not broken, it can return to its original size once we remove the force acting on it.

If the material returns to its original size, we say that the material was perfectly elastic during the time it was exposed to the force.

If the material does not return to its original size, we say that the material was deformed during the time it was exposed to the force.

If a certain force stretches a solid, two times this force will stretch the solid twice as far. Three times the force will produce three times the stretch, etc. This remains true until the perfectly elastic limit of the solid is exceeded, and the solid becomes deformed. Robert Hooke (1635 – 1703) stated this fact known as Hooke's law as follows:

***"Within the limits of perfect elasticity, elastic deformations of any sort, be they twists or bends or stretches, are directly proportional to the forces producing them."**

14.1 Tell how you can, using Hooke's law and a 20 kilogram weight, make a scale for a 40 kilogram spring balance.

Place the 20 kilogram mass on the spring balance and, using an unmarked scale (a piece of paper (or something else convenient to use) covering and fixed to the old scale), place a mark on the scale next to the scale pointer. This is the 20 kilogram mark on the new scale.

Remove the 20 kilogram mass from the scale. Place a mark next to the pointer on the unmarked scale. This is the zero mark on the new scale.

Divide the distance between the zero and 20 kilogram marks on the scale into 20 equal parts and mark them on the scale as you did before for the 0 and 20 kilogram marks.

Each of the divisions on the new scale is now equal to one kilogram, and each ½ division is equal to one metric pound.

14.2 A broken piece of iron or steel can be made solid again by “welding”. The two broken ends are heated white hot and then pounded together, or are melted by a gas flame or an electric arc. Gold foil is welded together cold in the process of filling a tooth. Explain what “welding” is.

A material is pressed together or melted until the molecules of the material are close enough for the *cohesive forces* between them to attract the molecules of both pieces back together. Heat must be applied to some materials to bring the molecules close enough together for this *cohesive bonding* to occur.

Joining two pieces of the same material together by causing their molecules to bond by cohesive forces between them (or dissimilar materials by causing their molecules to bond by adhesive forces between them) is called “welding”.

14.3 A piece of broken wood can be repaired with glue. What does the glue do?

The molecules of glue set up strong adhesive forces between themselves and the molecules of the wood. The glue also possesses strong cohesive forces between its own molecules. The glue is therefore able to hold the two pieces of wood together.

14.4 Why are springs usually made of steel instead of copper?

The elastic limits of steel are much larger than copper. The steel springs therefore have a wider force range of application, and are stronger than copper springs. Copper springs do not oxidize as readily as steel springs and are used where small forces are applied to them and in applications where corrosion control is important.

14.5 If a given weight is required to break a given wire, how much force is required to break two such wires hanging side by side?

Twice the force is required to break two identical wires.

How much force is required to break a second wire of twice the diameter of the first wire?

The cross sectional area of the first wire is $A = \Pi r^2$.

The cross sectional area of the second wire is $A = \Pi(2r)^2 = 4\Pi r^2$.

The cross sectional area of the second wire, having twice the diameter of the first wire, is four times greater than the cross sectional area of the first wire.

It therefore takes four times as much force to break the second wire.

15. MOLECULAR FORCES IN LIQUIDS

15.1 Explain how capillary attraction becomes useful in a fountain pen point.

It draws ink in a thin stream between the two halves of the point of the pen where the force of attraction between the ink in the point and the paper allow writing on the paper to occur.
Other examples of capillary action are the bristles of a paint brush that pull large quantities of paint into the brush, lamp wicks that lift the oil into the oxygen of the air so that the oil will burn cleaner, and sponges that pull large quantities of water into them for washing or drying.

15.2 Candle wax can be removed from clothing by covering it with blotting paper and then ironing it with a hot iron. Explain how this works.

Heat from the iron liquefies the wax beneath the blotting paper. Adhesive forces between the blotting paper and the liquid wax are stronger than the adhesive forces between the cloth and the wax. This draws wax out of the cloth.

15.3 How will a piece of sharp cornered glass become rounded when heated to redness by a flame?

The heat liquefies the solid glass on the corner; the liquid tries to assume a spherical form, rounding the sharp edge before it solidifies again.

15.4 The leads for pencils are made by subjecting powdered graphite to enormous pressures produced by hydraulic machines. Explain how the pressure changes the powder into a coherent mass.

The pressure forces the graphite powder molecules very close together until the coherent forces between the molecules begin to attract each other. When this occurs the lead to be used to make a pencil is formed.

15.5 Float two matches an inch apart on water. Touch the water between them with a hot wire. The matches will spring apart. What does this show about the effect of heat on the surface tension of water?

The molecules attracted together by surface tension on the surface of the water seem to be closer together than the molecules deeper in the liquid. When the surface molecules are suddenly heated at one part, the water molecules around this point receive a molecular impulse from the hot wire and move radially away from the point in all directions on the surface of the water. The water surface acts like a solid connection from the position of the hot wire to the matches floating on it, causing the matches to spring apart due to the molecular momentum imparted to them by the molecules of water moving rapidly away from the point on the surface.

15.6 Repeat the experiment in exercise 15.5, touching the water with a wire that has been dipped in alcohol. The matches rapidly spring apart again. What do you infer about the relative surface tensions of alcohol and water?

The molecules of alcohol are larger and farther apart than those of water. The surface tension of alcohol is therefore weaker than the surface tension of water.

15.7 Fasten a bit of gum camphor to one end of half of a toothpick and lay it on the surface of a large container of clean, still water. Explain the motion of the toothpick.

The toothpick begins to move in a spiral motion on the surface of the water. The camphor molecules are heavier and farther apart than water molecules, and exert a momentum on the end of the toothpick when going into solution in the water. The other end of the toothpick remains stable. This produces the toothpick's spiral motion.

15.8 Shot are made by pouring molten lead through a sieve on top of a tall tower and catching them in water at the bottom of the tower. Why are the shot spherical?

When the shot begins to fall it is in a liquid droplet state. The cohesive forces between its molecules cause the droplets to change to a spherical state, and the droplets on the surface due to surface tension hold the formed droplet in an almost perfect spherical form. As the balls of shot fall through the air, they are cooled to a solid state on the outside, but are still very hot. Falling into water they are rapidly cooled and change completely from the liquid to solid state.

15.9 Explain how capillary action makes an irrigation system successful.

When water falls on dry materials, the adhesive forces between the water molecules and the molecules of the materials it falls on are great. The soil quickly absorbs the water and becomes damp. The damp soil reaches the dry roots of the plants and is absorbed on their surfaces by capillary action. The water enters the plant by osmosis, and the plants begin to grow again.

15.10 When building a macadam road, coarse stones are placed at the bottom, smaller stones on top of them, and finally tiny granules are tightly rolled together by means of a street roller. Explain how this arrangement of materials helps keep the road dry.

Cohesive forces between the water molecules in conjunction with the force of gravity acting on them, and capillary action between the tightly packed fine particles on the surface of the road cause the water drops to flow through the upper surface of the road. Larger drops are formed in the underlying stone layer of the road, which are drawn farther down in streams into the coarse stone layer of the road, where the water flows away underneath the upper surface of the road.

15.11 What force is mainly responsible for the upward return of water that has gravitated into the soil?

Capillary forces of adhesion cause the water molecules deeper in the earth to be pulled toward the dry earth above them. This shows that the capillary forces of adhesion acting on the water molecules can be greater than the force of gravity trying to pull them deeper into the soil.

Would the looseness of the soil make any difference (dry farming)?

Loose soil has particles of earth that are farther apart than the particles of tightly packed soil. The capillary action in this kind of soil would therefore be expected to be less strong and capable of drawing the water molecules that are deeper in the soil upward.

15.12 Why do fish in an aquarium die if the water is not frequently refreshed?

Liquids have gasses dissolved in them. Fish breathe by removing dissolved air from the water they live in; this decreases the amount of oxygen dissolved in the water. If the water is not renewed, or more oxygen is not dissolved in the water, the fish will die.

15.13 Explain the apparent generation of ammonia gas when aqua ammonia is heated.

Aqua Ammonia is water in which ammonia gas has been dissolved.

***Experiment shows that in every case of absorption of a gas by a solid or a liquid that the quantity of gas absorbed decreases when the temperature is increased.**

When the temperature is increased, the amount of ammonia that can remain dissolved in the water decreases, so the excess ammonia gas leaves the solution and enters the air above it as pure ammonia gas. The ammonia gas was not generated; it existed already as ammonia gas before it was first dissolved in the water.

15.14 Why in the figure shown will the water flow much faster after reaching point F?

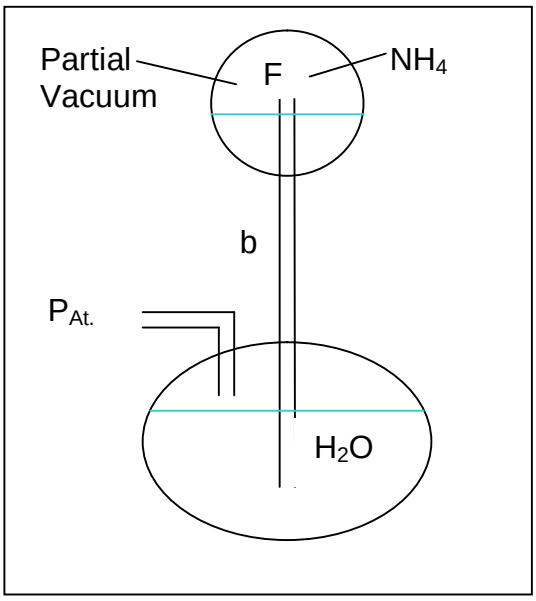

As NH_4-Gas is first absorbed into the H_2O through tube b, the H_2O climbs upward in tube b, because a partial vacuum is formed in the upper container caused by NH_4-Gas leaving it. Atmospheric pressure acting on the lower surface of the water inside of tube b in the lower container pushes the water up the tube.

When the water in the upper container reaches point F, the surface area of contact between the water and the ammonia gas has become much greater, increasing the rate at which ammonia gas can dissolve into the water. As the rate at which ammonia gas dissolves into the water increases rapidly, the strength of the partial vacuum in the upper container also increases rapidly.

The increased pressure difference between atmospheric pressure acting in the lower container and the stronger partial vacuum in the upper container now pushes the water upward through tube b faster.

16. MEASUREMENT OF WORK

16.1 To drag a trunk weighing 120 pounds required a force of 40 pounds. How much work must be done to drag this trunk three yards?

***Work = Force X Distance.**

$$Work = 40lb \times 3yards = 120lb.yards = \frac{120lb.yard}{1} \times \frac{3\,ft}{1yard} = 360\,ft \cdot lb.$$

How much work must be done to lift the trunk two yards high?

$$Work = Force \times Dis\tan ce = 120lb. \times 2\,yard = 240lb \cdot yard = \frac{240lb \cdot yard}{1} \times \frac{3\,ft}{1yard} = 720\,ft \cdot lb.$$

16.2 A carpenter pushed with a force of 5 pounds when removing a shaving of wood that was four feet long. How much work was done?

$$Work = 5lb. \times 4\,ft. = 20\,ft \cdot lb.$$

16.3 How many ft-lb of work does a 150-lb man accomplish when climbing a mountain that is 6300 ft high? Assume that the man started climbing when he was at an altitude of 300 ft.

$$Work = (6300 - 300)\,ft \times 150lb = 6000\,ft \times 150lb = 900{,}000\,ft \cdot lb.$$

16.4 A horse pulls a metric ton of coal to the top of a hill 30 meters high. Express the work accomplished in Newton-Meters.

A metric ton of coal has a mass of 1000 kilograms. The force of gravity acting on this mass is the mass multiplied by the acceleration of gravity, which is 9.81 meters per second for every second.

$$F_{GravityActingOnCoal} = \frac{1000kg}{1} \times \frac{9.81m}{s^2} = 9810N\ .$$

The work required to lift the metric ton of coal is this force multiplied by the distance the metric ton was moved vertically, which was 30 meters.

$$Work_{LiftingTheCoal} = 9810N \times 30m = 294{,}300N \cdot m\ .$$

The horse did not pull with the full force of 9810 Newton, but a lesser force. The horse pulled the metric ton a much longer distance than 30 meters up the road, however, to raise the ton of coal that high. The horse therefore did the same amount of work as *lifting* the metric ton 30 meters high vertically.

$$Work_{Horse} = 294{,}300N \cdot m$$

16.5 If 20,000 inhabitants of a city use an average of 20 liters of water each day for each person, how much work must the engines that pump the water do to deliver the water to the city if the city is 75 meters higher than the water source?

We must know what the total daily mass of water lifted each day is.

$$\frac{20{,}000\,people}{1} \times \frac{20L_{water}}{1person} \times \frac{1kg}{1L_{water}} = \frac{400{,}000kg}{1} = 400{,}000kg$$

The *force* that is required to lift this water is the mass of the water multiplied by the acceleration of gravity.

$$F_{gravity} = \frac{400{,}000kg}{1} \times \frac{9.81m}{s^2} = 3{,}924{,}000N\,.$$

The work that must be done to lift the water is this force multiplied by the height the water must be lifted, 75 meters.

$$Work = Force \times Dis\tan ce \Rightarrow Work_{Engines} = 3{,}924{,}000N \times 75m = 294{,}300{,}000N \cdot m\,.$$

16.6 If a hydraulic elevator carries a load of 20,000 lb. and moves 4 times as fast as the piston driving it, what force must be applied to the piston?

Let us call the distance the elevator moved X; then the distance the piston moved is X/4.

The work the elevator completed was 20,000lb. multiplied by X ft.

The work the piston completed was $Force_{Piston} \times \frac{X}{4}$ ft.

The work the piston completed is equal to the work the elevator completed.

$$Force_{Piston} \times \frac{Xft.}{4} = 20{,}000lb \times Xft \Rightarrow Force_{Piston} = \frac{20{,}000lb \times Xft.}{1} \times \frac{4}{Xft.} = 80{,}000lb.$$

If the water pressure that operates the elevator is $\frac{70lb.}{1in^2}$, what must the area of the piston be?

$$\Pr essure = \frac{Force}{Area} \Rightarrow Area = \frac{Force}{\Pr essure}.$$

$$Area_{Piston} = \frac{Force_{Piston}}{\Pr essure_{Piston}} = \frac{80{,}000lb}{\frac{70lb}{1in^2}} = \frac{80{,}000lb}{\frac{70lb}{1in^2}} \times \frac{1in^2}{1in^2} = \frac{80{,}000lb}{1} \times \frac{1in^2}{70lb} = 1{,}142.8in^2.$$

What must the radius of the piston be?

$$Area_{circle} = \pi \times r^2 \Rightarrow r^2 = \frac{Area_{circle}}{\pi} \Rightarrow r = \sqrt{\frac{Area_{circle}}{\pi}} = \sqrt{\frac{1{,}142.8in^2}{\pi}} = 19.07in.$$

The diameter of the piston is twice its radius, or 38.14 inches.

A $38\frac{1}{4}$ inch diameter piston would do the work of lifting the elevator.

17. WORK AND THE PULLEY

17.1 Although the mechanical advantage of the single fixed pulley is only 1, it is extensively used in connection with clothes lines, awnings, open wells, and flags. Explain.

The single fixed pulley is used to change the direction in which a force is applied.

17.2 Draw a diagram of a set of pulleys by which a load of 250 pounds can be raised by a force of 50 lb.

The mechanical advantage of a pulley system is equal to the weight lifted divided by the force applied.

In this case the mechanical advantage of the pulley system must be 250 pounds divided 50 pounds, or 5.

***There is an easy way to determine how to build a pulley system for any desired mechanical advantage. The number of rope segments going from one pulley wheel on the fixed block of pulleys to another pulley wheel on the movable block of pulleys must be equal to the mechanical advantage desired**.

The number of rope segments going from one pulley wheel on the fixed block of pulleys to another pulley wheel on the movable block of pulleys in this case must be equal to five. These rope segments are numbered from 1 to five in the figure.

Notice in the figure that rope segment number 5 goes from the wheel to the frame of the other block of pulleys and is tied to the other frame (not the frame it belongs to)

Also notice in the figure that the total number of pulley wheels is 5.
If you wanted to make a set of pulleys that would pull with a force of 4000 Newton when you pull with a force of 500 Newton, how many pulley wheels would you need?

The mechanical advantage of the pulley system is 4000 divided by 500, or 8. You would need eight pulley wheels. You could make two pulley blocks, each having four wheels attached to their own frame. The eighth rope segment must go from wheel 8 to the frame of the other pulley block and then be tied to that frame (not to its own frame).

The weight of the person pulling on the rope must be enough to create a pulling force of 500 Newton. What is the least body mass that the person can have?

$$F_{Gravity} = Mass_{Body} \times Acceleration_{Gravity} \Rightarrow Mass_{Body} = \frac{F_{Gravity}}{Acceleration_{Gravity}}.$$

$$Mass_{Body} = \frac{500N}{\frac{9.81m}{s^2}} = \frac{500N}{\frac{9.81m}{s^2}} \times \frac{1kg}{1kg} = \frac{500Nkg}{\frac{9.81kg \cdot m}{s^2}} = \frac{500Nkg}{9.81N} = \frac{500kg}{9.81} \times \frac{N}{N} = \frac{500kg}{9.81} \times 1 = 50.96kg.$$

To account for friction in the pulley system, the person should have a mass of about 55 kilograms.

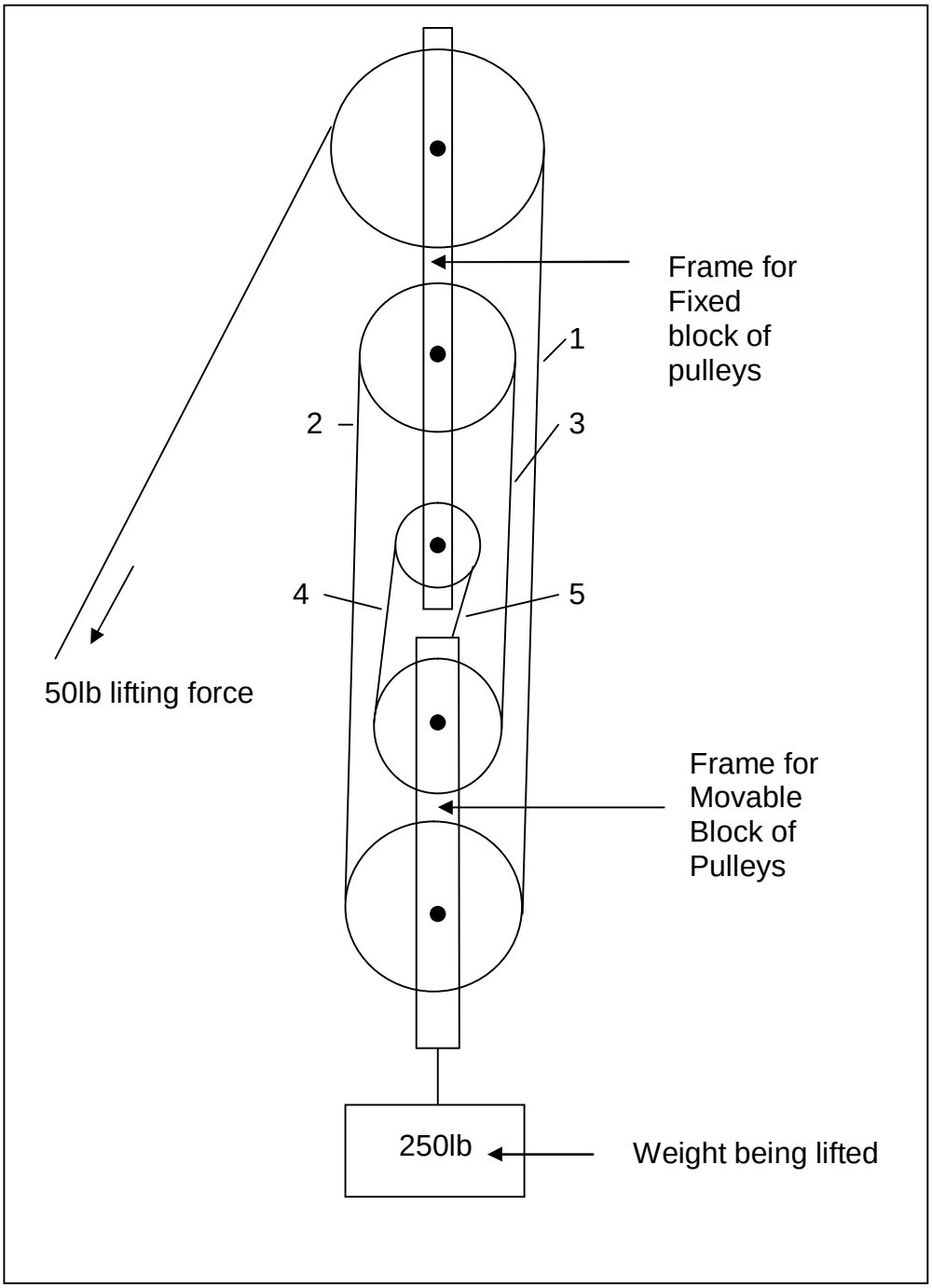

17.3 Draw a diagram of a set of pulleys by which a force of 50lb can support a weight of 200lb.

The mechanical advantage of the pulley system is 200 / 50 = 4. There are four pulley wheels divided into two fames, one fixed and the other movable.

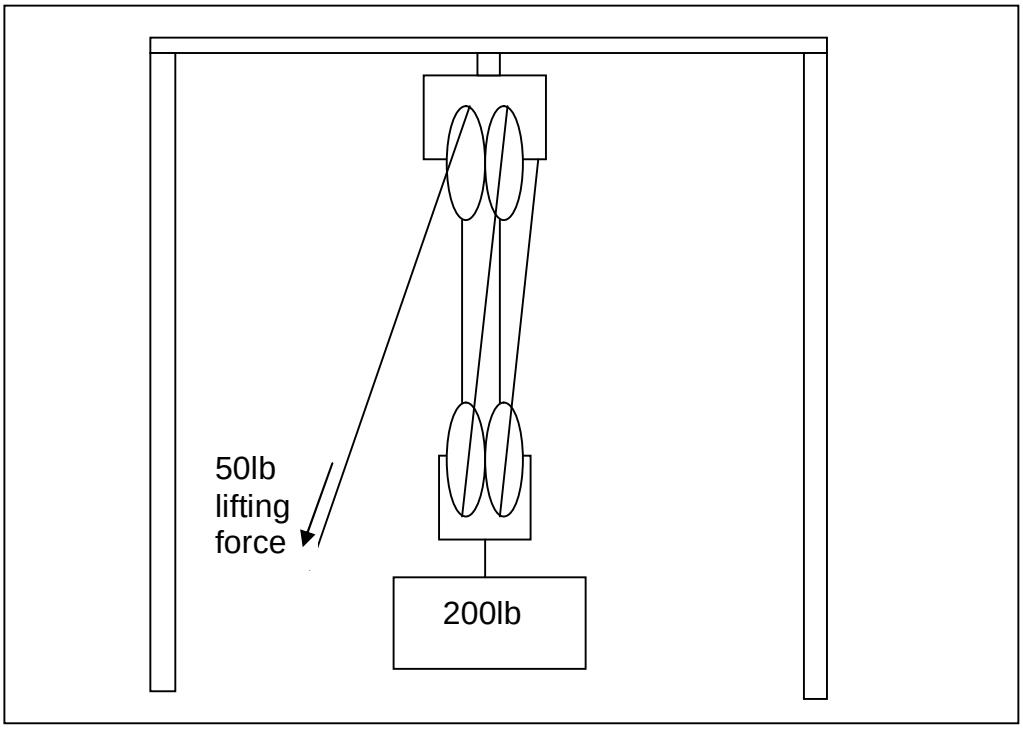

17.4 Two men pulling 50 lb each lifted 300 lb using a system of pulleys. If there were no friction, how many feet of rope did the two men pull down in raising the weight 20 feet high?

The work done lifting 300 lb 20 ft is 600 ft-lb. The two men must have done the same amount of work to lift the weight. The force of the two men pulling together was 100 lb.

$$Force_{men} \times Distance_{men} = Force_{weight} \times Distance_{weight} \Rightarrow Distance_{men} = \frac{Force_{weight} \times Distance_{weight}}{Force_{men}}$$

$$Distance_{men} = \frac{300lb \times 20\,ft}{100lb} = 60\,ft\,.$$

18. WORK AND THE LEVER

A lever can be used to multiply, i.e. to increase or decrease a force. When it does this, we say that the lever has a mechanical advantage. For example, if we push on a lever with a force of 10 Newton and the lever pushes on some other object with a force of 100 Newton, we say that the lever in this case has a *mechanical advantage of ten*, because the resultant force of the lever is ten times larger than the force we exert on the lever. The mechanical advantages of levers can be more than one, equal to one, or less than one.

A lever can also be used to change the direction of a force if the lever is a lever of type 1.

In the figure, the triangle is an immovable, stable point (a location that can be on an object, or the floor, or the earth, etc.) on which the lever rests and against which the lever can work; this point, or location, is called the "**Fulcrum**" of the lever.

E represents the force Exerted, while R represents the force that results.

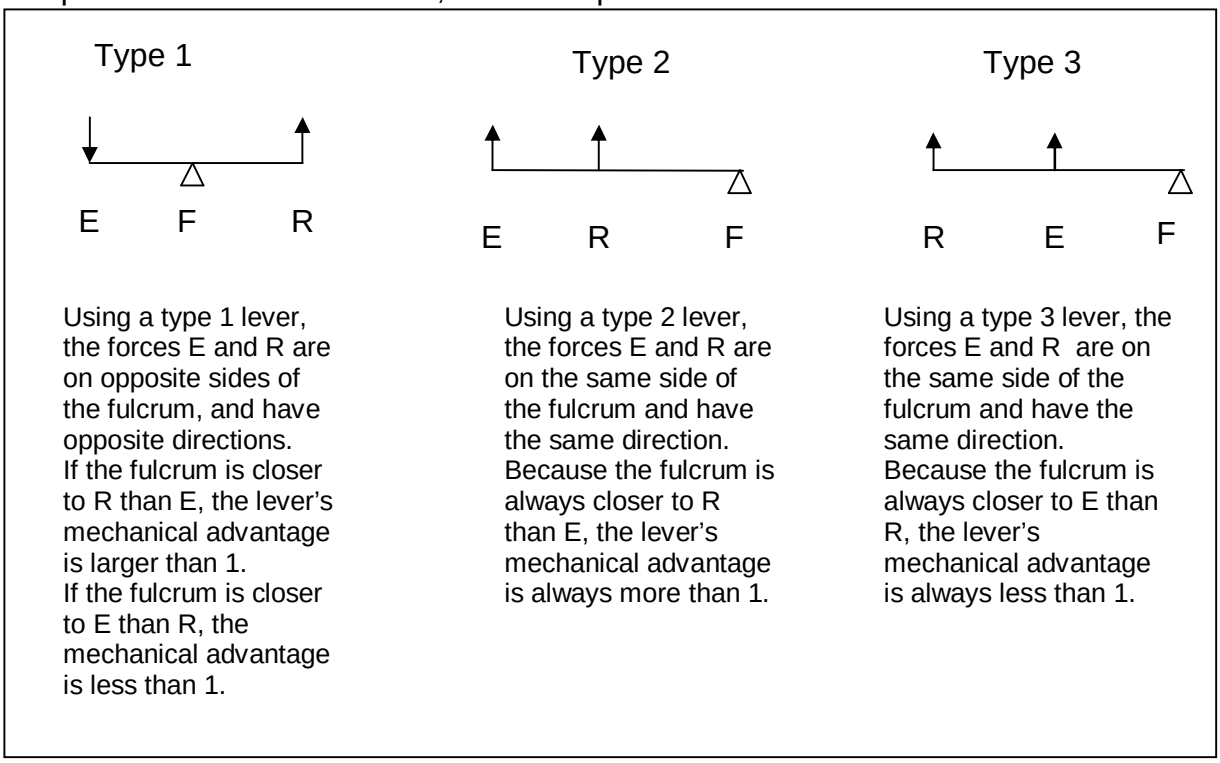

18.1 In which of the three classes of levers does a wheelbarrow , a grocer's scales, a pair of pliers, tangs, a claw hammer, a pump handle belong?

Wheelbarrow – type 2. Grocer's scales – type 1. Pliers – type 1. Tangs – type 3. Claw hammer – type 1. Pump handle – type 2

18.2 Explain the principle of weighing in the figure shown.

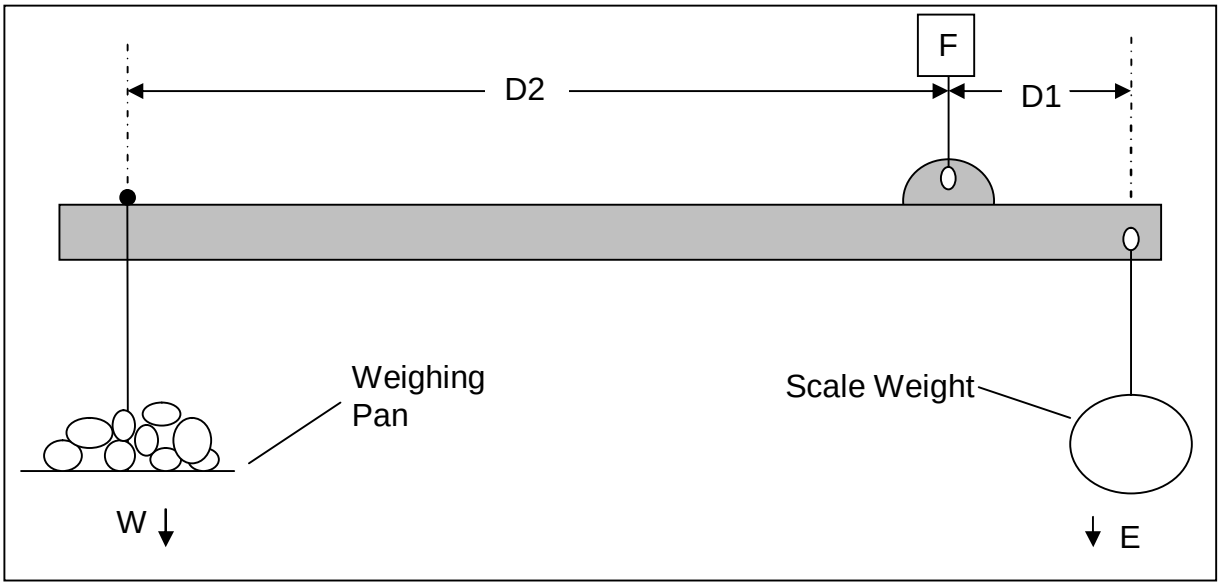

These scales are a lever of type 1. The scales are balanced when W x D2 = E x D1.

So, the weight of the material on the scales, W, is W = $\frac{E \times D1}{D2}$.

D1 is constant; it is always the same for these scales.

E is the force exerted by the scale-weight, which can be changed.

F is the position from which the scales are hung.

W is the weight (gravitational force) of the articles placed in the weighing pan.

D2 is the distance the weighing pan is moved from position F, to balance the scales. For heavier articles, D2 will be shorter, and for lighter articles, D2 will be longer.

18.3 If you knew your own weight, how could you determine the weight of a companion?

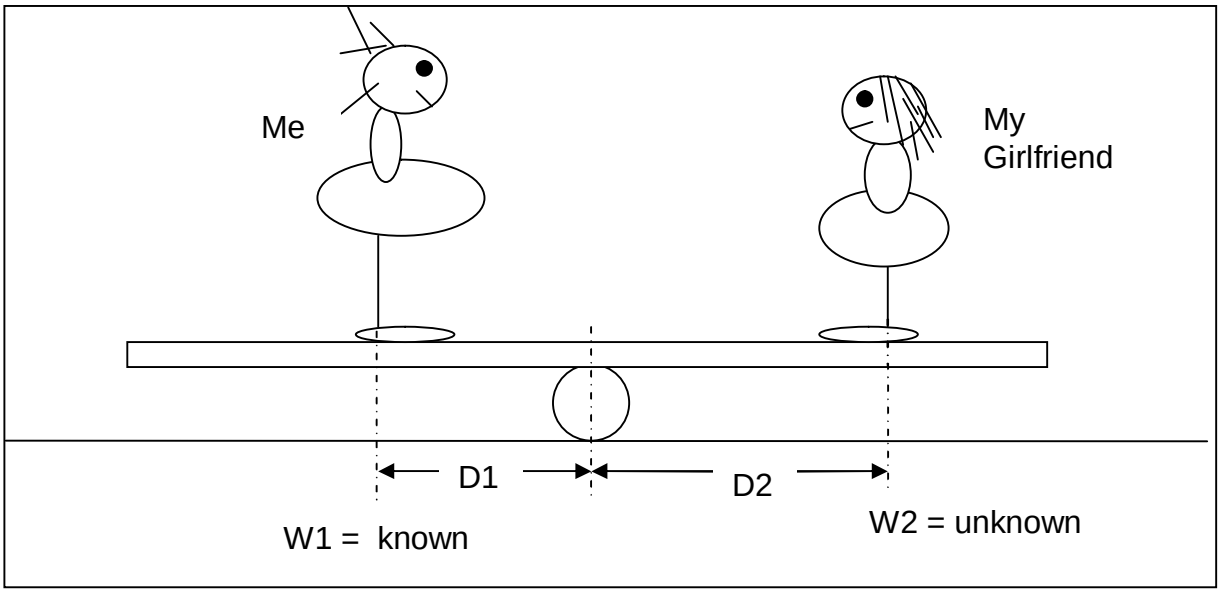

The beam, or plank, is balanced when W2 x D2 = W1 x D1.The unknown weight of your companion, W2, is equal to $\frac{W1 \times D1}{D2}$.

18.4 How would you use a crowbar as a type 1 lever to turn a heavy object over? How would you use a crowbar as a type 2 lever to turn a heavy object over?

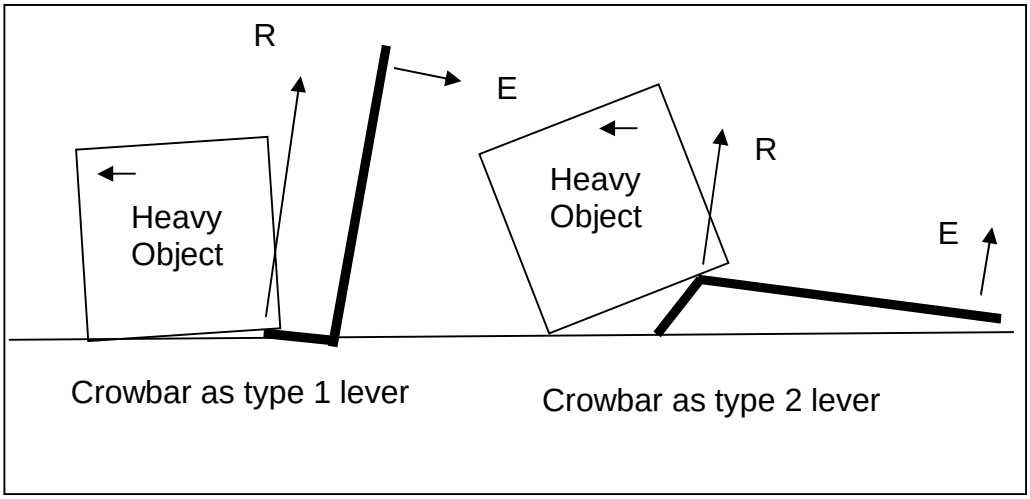

18.5 Why do sheet metal shears have long handles and short blades?

Each handle and blade made from a single piece of steel is a type 1 lever.

The handle is long and the blade is short, so the force produced on the blade by the force of squeezing the handles is great enough to cut the sheet metal.

Why are tailor's shears just the opposite?

The tailor's shears are only required to cut cloth, so the blade does not require a great force as is required of sheet metal shears. The blade of the tailor's shears can therefore be made longer, which allows a long straight cut to be made in the cloth with one operation of squeezing the handles together.

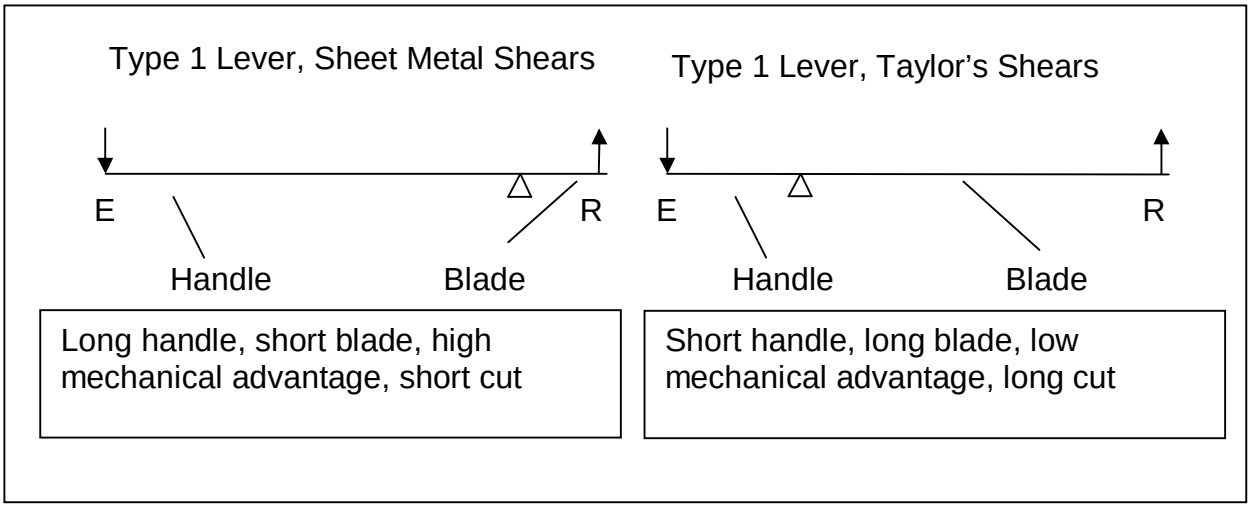

18.6 Using a reference to moments, explain why a door can be closed more easily by pushing on its doorknob or handle than near its hinges?

The door has a center of gravity (black dot in the figure). All of the mass of the door can be considered to be at its center of gravity, as though the entire door were shrunk to be located at this single point, its center of gravity. The momentum of the door can be considered to be at this center of gravity.

The door has a momentum, and to change its momentum (to close or open the door), we must act on the mass of the door by applying a force to it. The door resists the attempt to change its momentum (inertia). The amount of force we must use to overcome the door's inertia is determined by where we apply force to the door.

If we use the door handle, we are using a type 2 lever as shown in the figure, which increases the resultant force and makes it easy to open the door.

Pushing on the door near the hinges, we are using a type 3 lever as shown in the figure, which decreases the resultant force and makes it difficult to open the door.

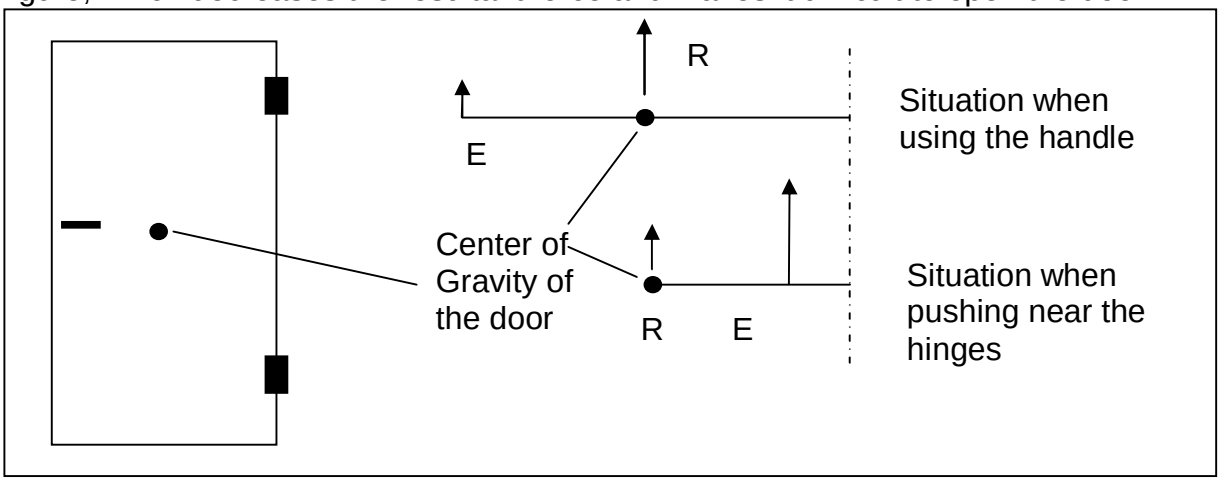

18.7 Two boys carry a load of 60lb on a pole between them. If the load is 4 ft. away from one boy and 6 ft. away from the other, how many pounds does each boy carry?

We can use what we know about levers to solve this problem. We will name one boy Alfred and the other boy Bernie. Think of Alfred as the force being exerted upward and think of Bernie as a rock under the other end of the pole (the fulcrum). We now are considering a type 2 lever, as shown in the figure.

Force A x 10ft = 60lb x 6 ft. $Force_{Alfred} = \frac{60lb \times 6\,ft}{10\,ft} = 36lb$. Bernie then must carry the rest of the weight, or 24lb.

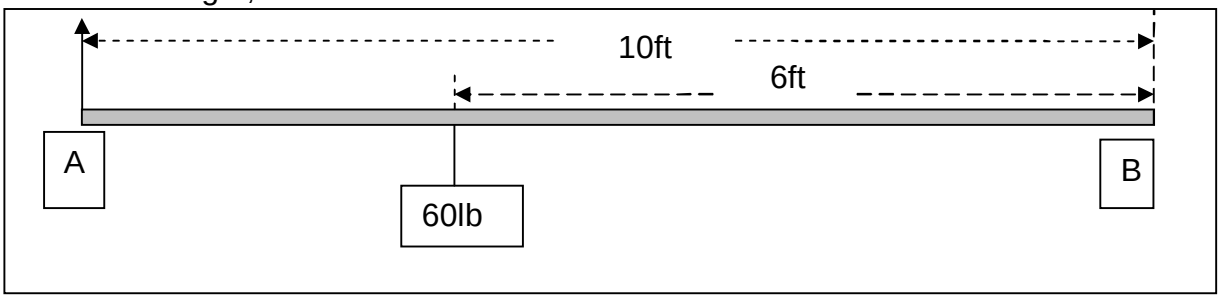

Now think of Bernie as the force being exerted upward and think of Alfred as a rock under the other end of the pole (the fulcrum). Force B x 10ft = 60lb x 4 ft.

$Force_{Bernie} = \frac{60lb \times 4\,ft}{10\,ft} = 24lb$. Alfred then must carry the rest of the weight, or 36lb.

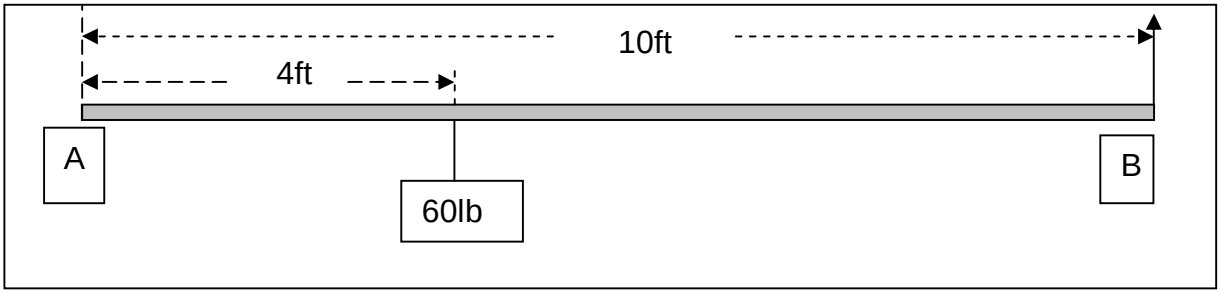

18.8 Where must a load of 100 lb be placed on a stick 10 feet long, if a man who holds one end is to support 30 lb while the other man supports 70 lb?

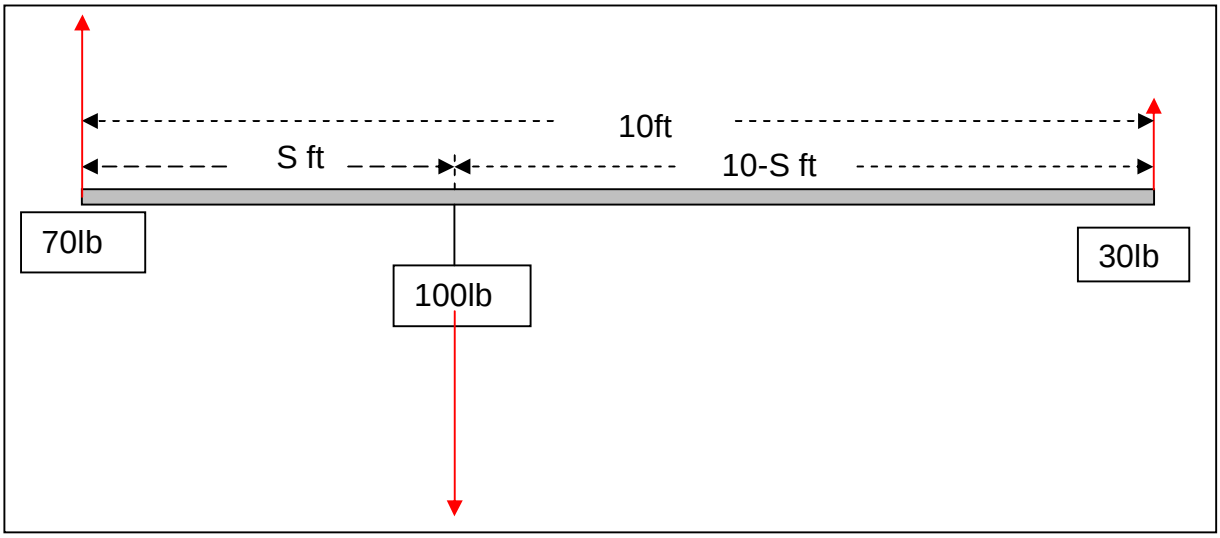

Think of the man carrying 70 lb as being a rock under one end of the stick (the fulcrum).

30lb x 10ft =100lb x S ft.

$$S = \frac{30lb \times 10\,ft}{100lb} = \frac{300\,ftlb}{100lb} = \frac{300\,ft}{100} \times \frac{lb}{lb} = \frac{300\,ft}{100} \times 1 = 3\,ft.$$

The load must be placed 3 feet away from the man carrying 70lb, or 7ft away from the man carrying 30lb.

18.9 One end of a piano must be raised to repair a broken caster. The force required is 240 lb. Make a diagram to show how a 6 foot steel bar can be used as a second class lever to raise the piano with a force of 40 lb.

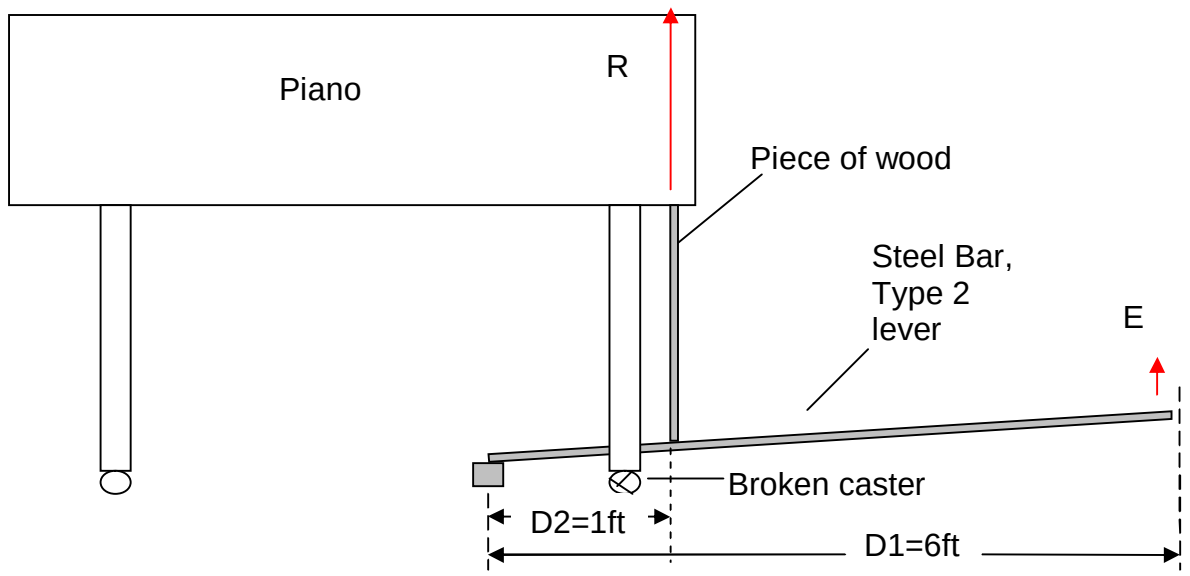

E = 40 lb. R=240lb. D1=6ft. E x D1 = R x D2.

D2= $\frac{E \times D1}{r} = \frac{40lb \times 6\,ft}{240lb} = \frac{240\,ft}{240} \times \frac{lb}{lb} = 1\,ft \times 1 = 1\,ft$.

18.10 When a load is carried over the shoulder with a stick, why does the pressure on the shoulder become greater as the load is moved farther out on the stick?

The turning force, called torque, (D1 x F) caused by the load becomes greater as the load is moved farther from the body; this must be compensated by a greater backward turning torque, which is on the other side of the shoulder when the hand pulls the stick downward. The shoulder and stick have a contact area that remains almost constant. The stick presses on this area with greater force. A greater force acting on the same area produces a greater pressure at that location.

In the left half of the figure, the distance to the load and to the hand from the shoulder are equal (D1=D2).

In the right half of the figure, the load has been moved on the stick to be twice as far from the shoulder (D1=2D2).

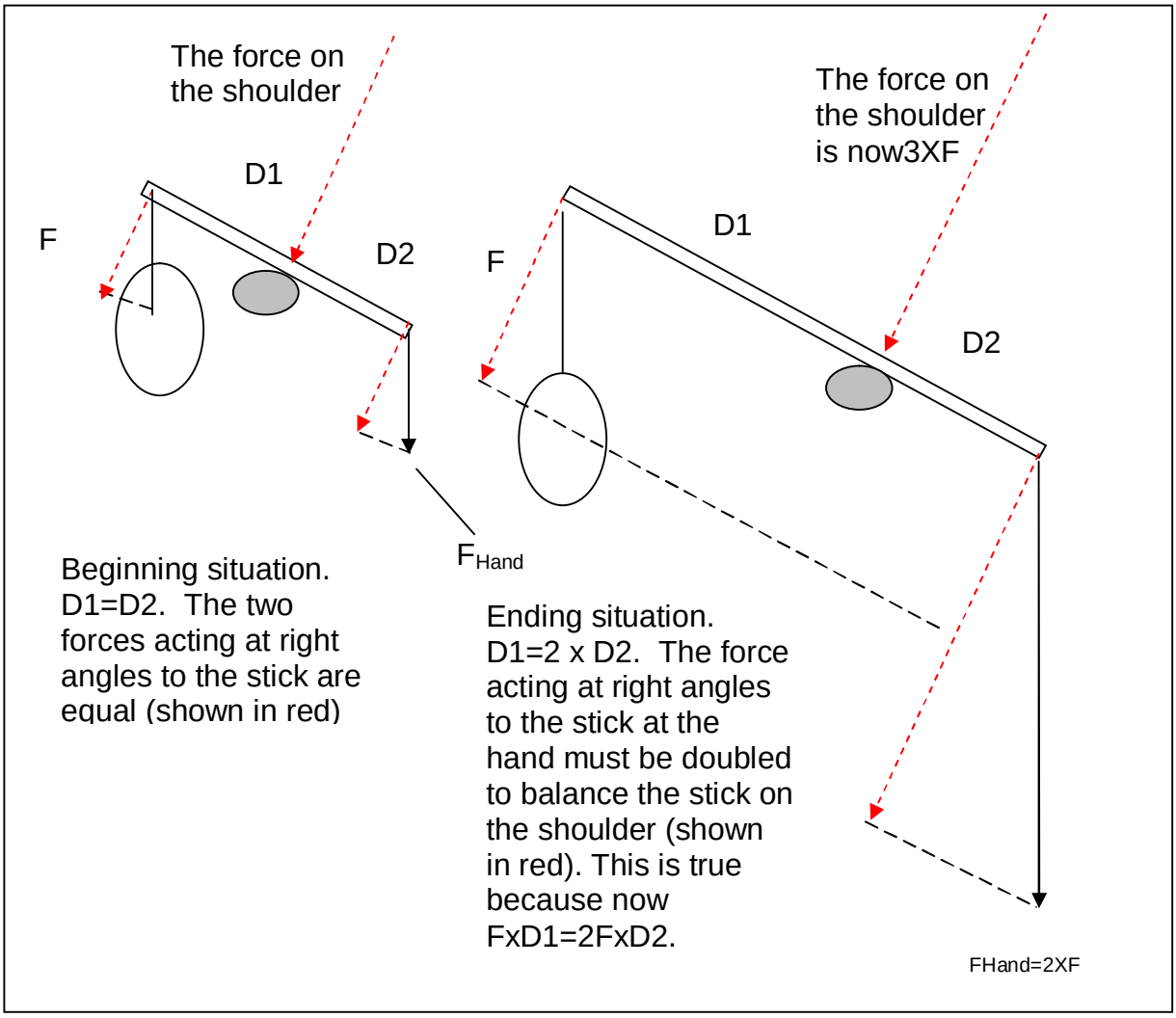

18.11 A safety valve and weight are arranged as shown. If $\overline{ab}$ is 1 ½ inches and $\overline{bc}$ is 10 ½ inches, then $\overline{ac}$ (the total arm length) is 12 in. What effective steam pressure in lb/in² is required to act on the valve to unseat it, if the area of the valve is ½ in^2 and the weight of the ball is 4 lb.?

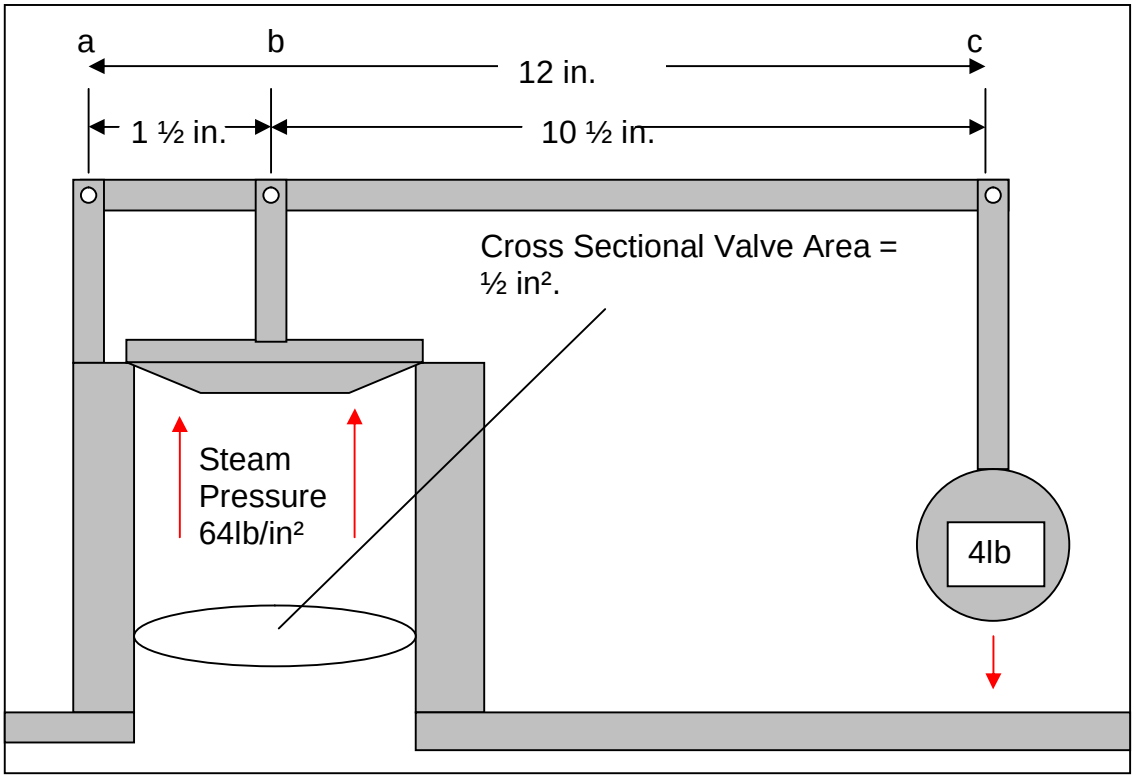

The torque (turning moment) caused by the valve upward on the arm must be slightly greater than the torque of the ball weight acting downward on the arm before the valve will open.

When the two torques are equal,

$$F_{Steam} \times 1.5in. = F_{Ball} \times 12in. \Rightarrow F_{Steam} = \frac{4lb \times 12in}{1.5in} \Rightarrow F_{Steam} = 32lb.$$

$$F_{Steam} = P_{Steam} \times A_{Valve} \Rightarrow P_{Steam} = \frac{F_{Steam}}{A_{Valve}} = \frac{32lb}{0.5in^2} = 64\frac{lb}{in^2}.$$

The valve will open when the steam pressure exceeds 64 lb/in². The valve regulates the internal pressure of the system at about 64 lb/in².

18.12 The diameters of the piston and cylinder of a hydraulic press are 3inches and 30 inches respectively. The piston rod is attached 2 feet from the fulcrum of a lever 12 feet long. What force must be applied to the end of the lever to make the press exert a force of 5000 pounds?

The mechanical advantage of the hydraulic press is the area of the large piston divided by the area of the small piston:

$$\frac{Area_{Large\_Piston}}{Area_{Small\_Piston}} = \frac{\pi \times (30in)^2}{\pi \times (3in)^2} = \frac{900}{9} = 100.$$

The mechanical advantage of the lever is:

$$\frac{12\,ft}{2\,ft} = 6.$$

The total mechanical advantage of the system is 6 x 100 = 600.

If the large piston is to produce a resultant force of 5000lb, then 1/600 of this force must be applied to the end of the lever:

$$Force_{applied\_to\_lever} = \frac{Force_{applied\_by\_large\_piston}}{600} = \frac{5000lb}{600} = 8\frac{1}{3}lb.$$

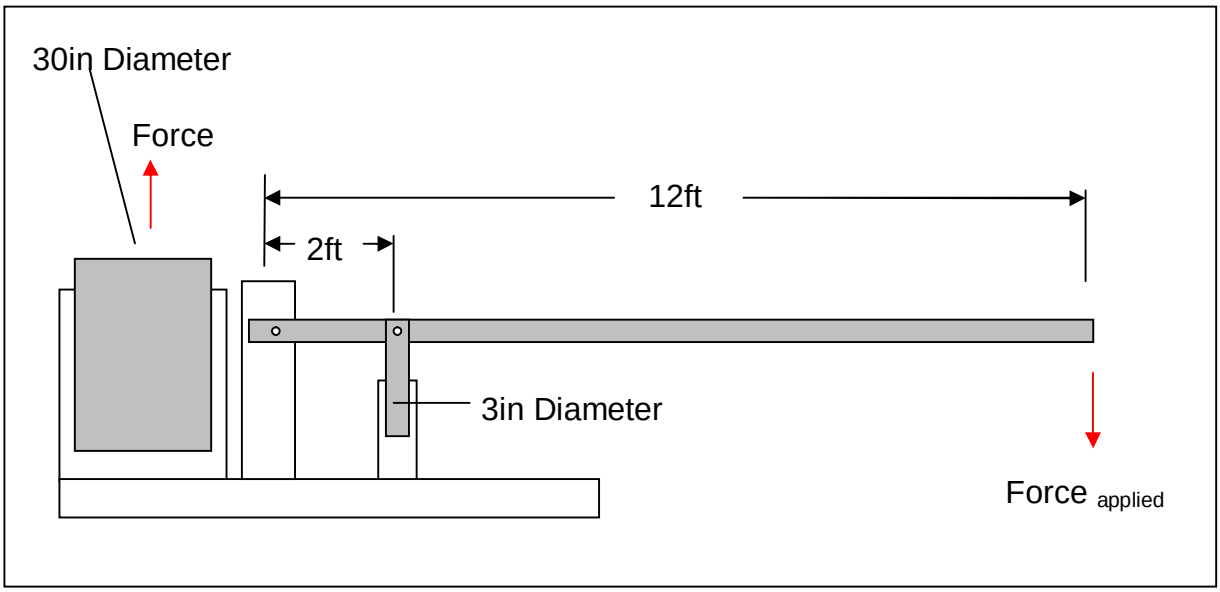

18.13 Three boys sit on a seesaw as follows: A (75lb, 4ft right of the fulcrum, F), B (100lb,7ft right of F) and C (unknown weight, 7ft left of F). The seesaw is balanced when a man pushes upward with a force of 25lb 12ft to the right of F. How much does boy C weigh?

The torques moving the seesaw counter clockwise must equal the torques moving the seesaw clockwise if the seesaw is balanced.

The counterclockwise torques must equal the clockwise torques when the seesaw is balanced.

$$(Clb \times 7\,ft) + (25lb \times 12\,ft) = (75lb \times 4\,ft) + (100lb \times 7\,ft) \Rightarrow$$
$$7Cftlb + 300\,ftlb = 300\,ftlb + 700\,ftlb \Rightarrow$$

$$Clb = \frac{700\,ftlb}{7\,ft} = 100lb.$$

Boy C weighs 100 pounds.

19. THE PRINCIPLE OF WORK

19.1 A 1500lb safe must be raised 5ft. The force that can be applied is 250lb. What is the shortest inclined plane that can be used to accomplish the work?

The work to be accomplished is 1500lb x 5ft, or 7500 ft-lb. The 250lb force must accomplish this same amount of work.

Method 1: The 250lb force pushing the safe up the ramp must move a distance, S, so that 250 lb x S ft = 7500 ft-lb. S ft = 7500ft-lb/ 250 lb. S = 30 ft.

Method 2: Geometric solution

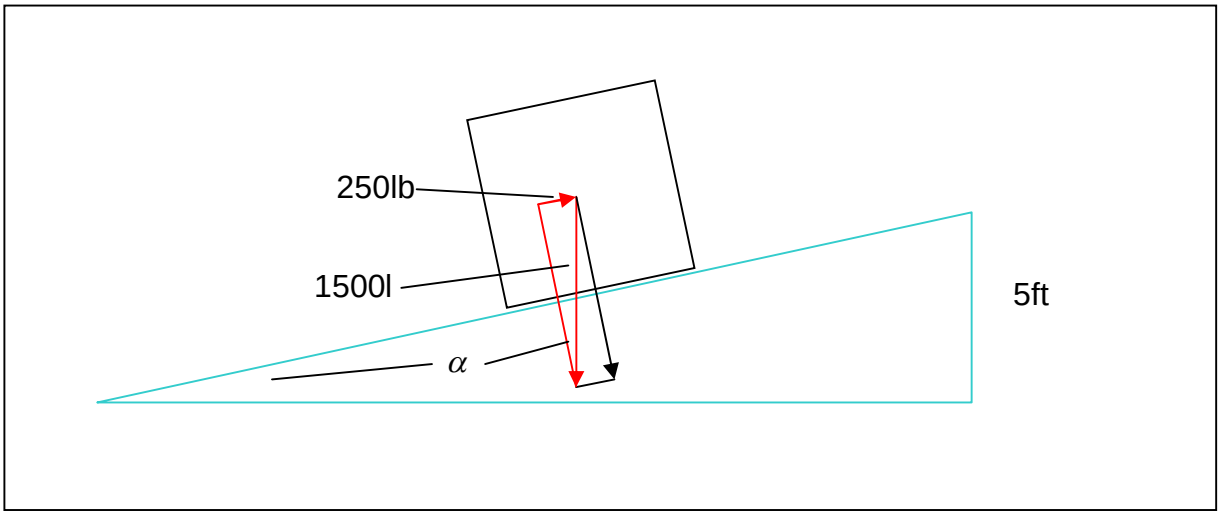

The sine of the angle alpha in the red triangle is equal to 250/1500 = 1/6.

The sine of the angle alpha in the blue triangle is also equal to 1/6, because the red and the blue triangles are similar triangles. The short side of the blue triangle is 5ft, so the long side must be 6 times as long, or 30ft.

19.2 A 300 lb barrel was rolled up a plank 12 feet long into a doorway 3 feet high. What force was applied parallel to the plank?

$$Force_{Effort} \times 12\,ft = 300lb \times 3\,ft \Rightarrow Force_{Effort} = \frac{300lb \times 3\,ft}{12\,ft} = 75lb.$$

19.3 A force of 800 Newton on a wheel whose diameter is 3 meters balances a weight of 1500 Newton on the axle. Find the diameter of the axle.

The radius of the wheel is 1.5 meters. The torque caused by the 800 Newton force acting at a distance of 1.5 meters from the center of the wheel is 1200Nm.

The torque caused by the 1500 Newton force acting on the axle must also be equal to 1200 NM, because the two torques are balanced.

$$1500Newton \times R_{axle}Meter = 1200Nm \Rightarrow R_{axle}Meter = \frac{1200N \cdot m}{1500N} = 0.8m = 80cm.$$

19.4 The hand winch used to lift the anchor of a large sailing ship has a diameter of 12 inches. If the four winch levers are 6 feet long, what force must be exerted by each of four men to raise the anchor if it weighs 2000 pounds?

The radius of the hand winch is 6 inches, or ½ foot.

The anchor produces a torque on the hand winch of ½ foot x 2000 lb, or 1000ft-lb.

Each man produces a counter torque of one Man's Force in pounds x 6 feet.

All four men produce a counter torque of 4 x (one man's force in pounds x 6 feet), or one man-force in pounds x 24 feet, that must be slightly greater than 1000ftlb to lift the anchor.

$$Force_{one\_man} lb \times 24\, ft = 1000\, ft \cdot lb \Rightarrow Force_{one\_man} lb = \frac{1000\, ft \cdot lb}{24\, ft} = 41\frac{2}{3} lb.$$

If each man pushes with a force of 42 pounds, the anchor will be lifted.

19.5 If, in the compound lever shown, AC = 6 meters, BC = 1 meter, DF = 4 meters, FG = 2/3 meter, HJ = 5 meters, and IJ = 2 meters, what force applied at E will support a force of 2000 Newton at R?

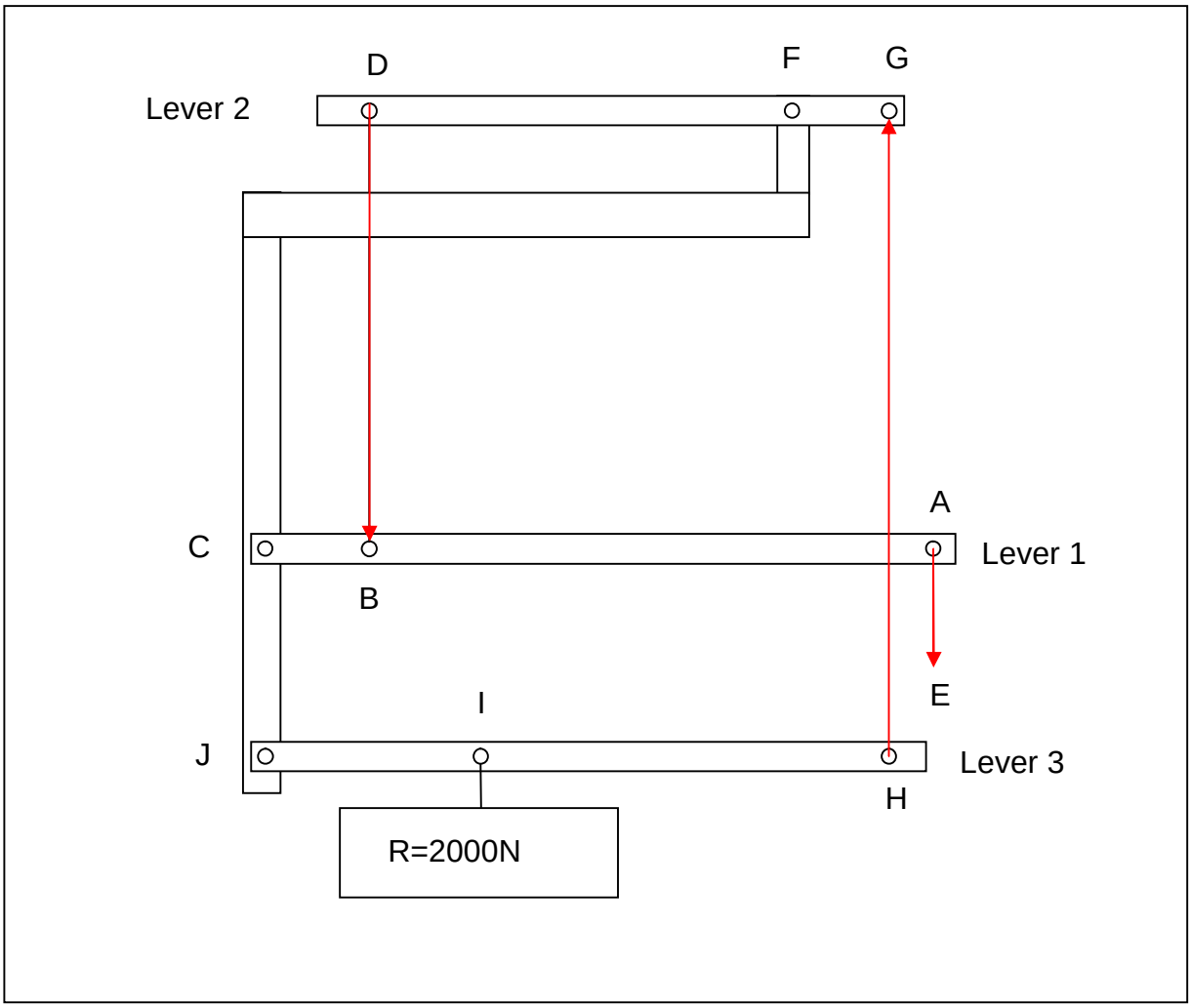

The mechanical advantage of lever 1 is 6. The mechanical advantage of lever 2 is 6.

The mechanical advantage of lever 3 is 2.5.

The total mechanical advantage is 6 x 6 x 2.5 = 90.

$$Mechanical\_Advantage = \frac{R}{E} = 90 \Rightarrow E = \frac{R}{90} = \frac{2000lb}{90} = 22\frac{1}{9} N.$$

19.6 The hay scales shown consist of a compound lever having fulcrums at F, F’, F’’, and F’’’. If FO and F’O’ are 6 inches long, FE and F’E are 5 feet long, F’’N is 1 foot, F’’M is 6 feet, RF’’’ is 2 inches, and F’’’S is 20 inches, how many pounds at W will be required to balance a weight of one ton on the platform?

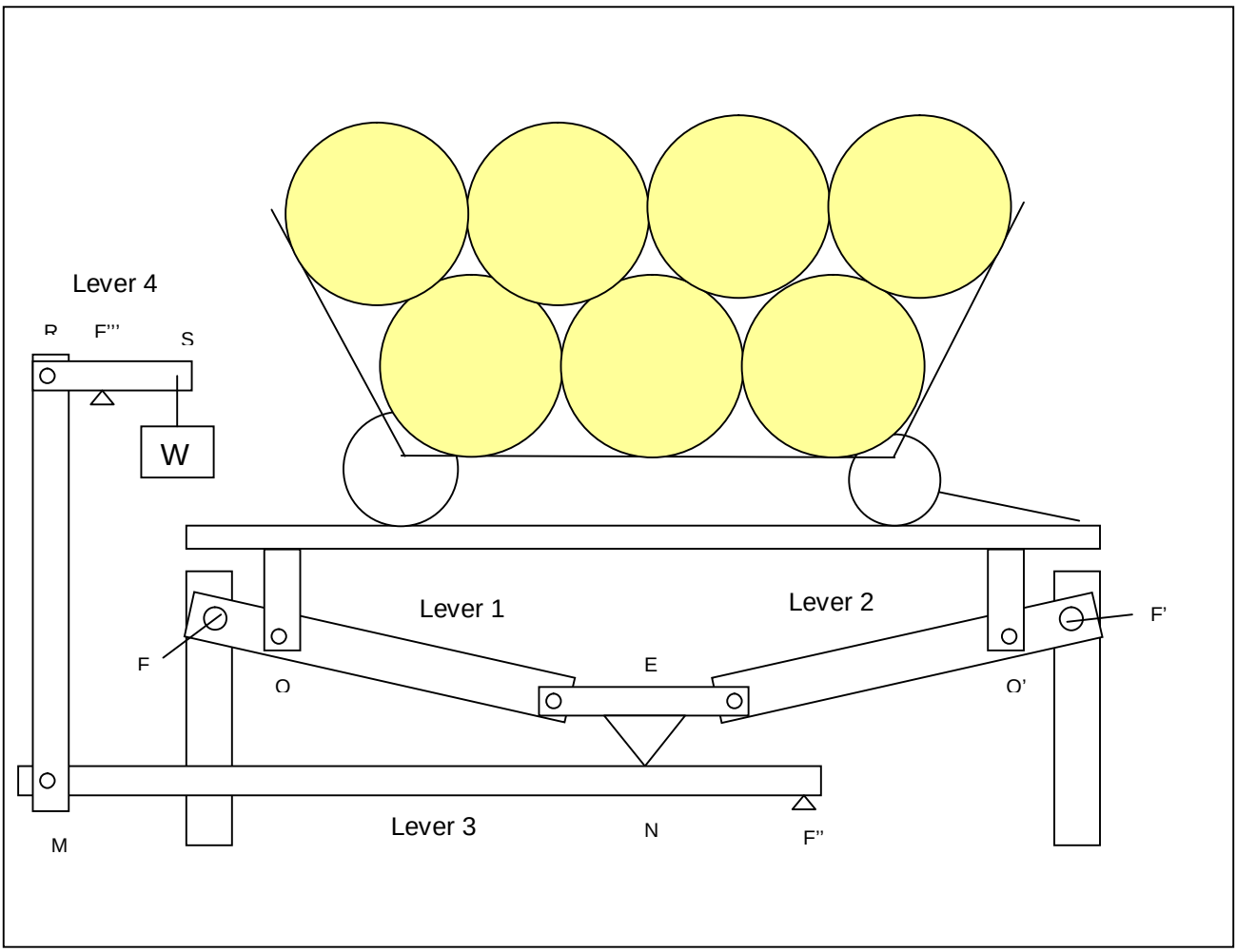

Lever 1 and lever 2 carry the entire load of the hay wagon. A part of the load (about half) is carried by lever 1 and the rest of the load is carried by lever 2. Notice that in this problem we must treat levers 1 and 2 as a single lever, because each of them carries *only a part* of the weight of the hay wagon. The mechanical advantage of both of these levers together, lever 1 and lever 2, is:

$$Mechanical\_Advantage = \frac{FE}{OF} = \frac{F'E}{O'F'} = \frac{5\,ft}{1/2\,ft} = 10.$$

One-tenth of the weight of the hay wagon (2000lb) will be the downward force at E (200lb).

Lever 3 has a mechanical advantage of:

$$Mechanical\_Advantage = \frac{MN}{NF''} = \frac{6\,ft}{1\,ft} = 6.$$

One-sixth of the weight at E will appear as a downward force at point M, or 200lb/6 = 33 1/3lb.

Lever 4 has a mechanical advantage of: $Mechanical\_Advantage = \frac{F'''S}{RF'''} = \frac{10in}{1in} = 10.$

One tenth of the force at M will appear as an upward force at S, or 3 1/3 pounds.

A three and one-third pound weight must be hung at point W to balance lever 4.

*** Another way to easily solve this problem is to multiply the mechanical advantages of all levers in the system together, 10 x 10 x 6 = 600.**

The weight required to balance the scales is then one six-hundredth of the load on the scales, or 2000lb / 600 = 3 1/3lb.

In reality, an unknown load is parked on the scales and lever 4 is balanced with an appropriate weight, W. The weight of the load is then 600 times W.

19.7 In the windlass shown, the crank handle has a length of 2 ft, and the barrel a diameter of 8 inches. There are 20 teeth on the small gear and 60 teeth on the large one. What is the mechanical advantage of the arrangement?

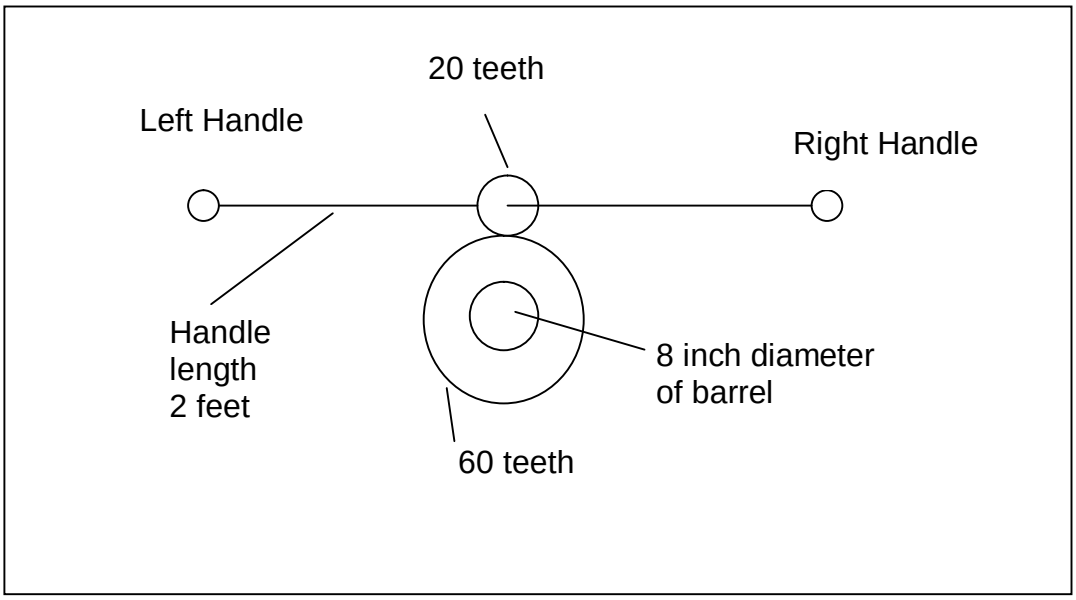

The mechanical advantage of the gears is 60 / 20 = 3.

The mechanical advantage of the handle and barrel is 24in / 8in = 6.

The mechanical advantage of the windlass is 3 x 6 = 18.

19.8 If in the crane shown the crank arm has a length of ½ meter and the gear wheels A,B,C and D have respectively 12, 48, 12, and 60 teeth, while the axle over which the chain runs has a radius of 10 cm, what is the mechanical advantage of the crane?

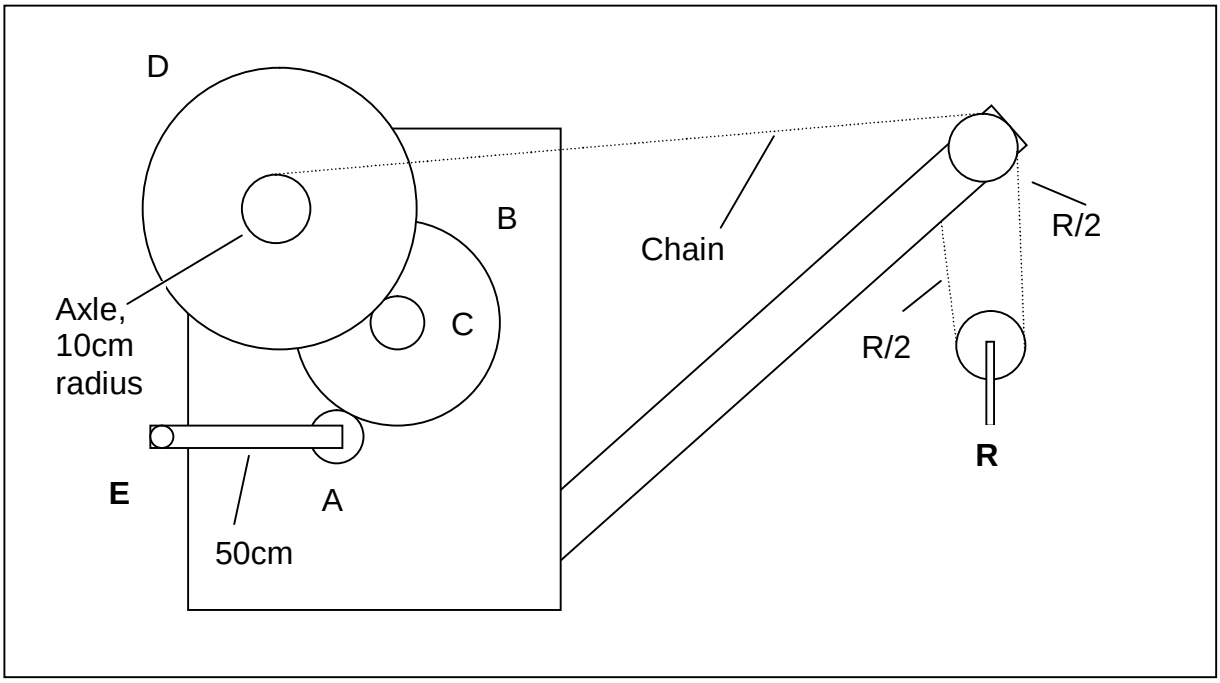

Method 1.

The torque produced by the handle is E x 50 cm.

This torque is multiplied four times by the gears A and B, and another five times by gears C and D. The torque acting on the axle caused by the force exerted, E, at the handle, is therefore:

E kg x 0.5m X4 X 5 = 10E kg-m.

This torque must be equaled by a torque T kg (T = tension in the chain) x 0.1 m = 0.1T kg m.

10E kg-m=0.1T kg m. T = 100 E.

R, the resultant force that appears at the load, is twice the tension in the chain, T.

R = 2 X T = 2 x 100E = 200E.

The mechanical advantage of the crane is R/E = 200E / E = 200.

Method 2.

The mechanical advantage of the crane is:

$$\frac{50cm}{10cm} \times \frac{48(B)}{12(A)} \times \frac{60(D)}{12(C)} \times 2(Pulley) = 5 \times 4 \times 5 \times 2 = 200.$$

A ton can be lifted with an effort (E) of ten pounds at the handle, because

E x mechanical advantage = R.

10lb x 200 = 2000lb = 1 ton.

19.9 If a worm wheel has 30 teeth, and the crank handle is 25 cm long, while the radius of the axle is 3 cm, what is the mechanical advantage of the arrangement?

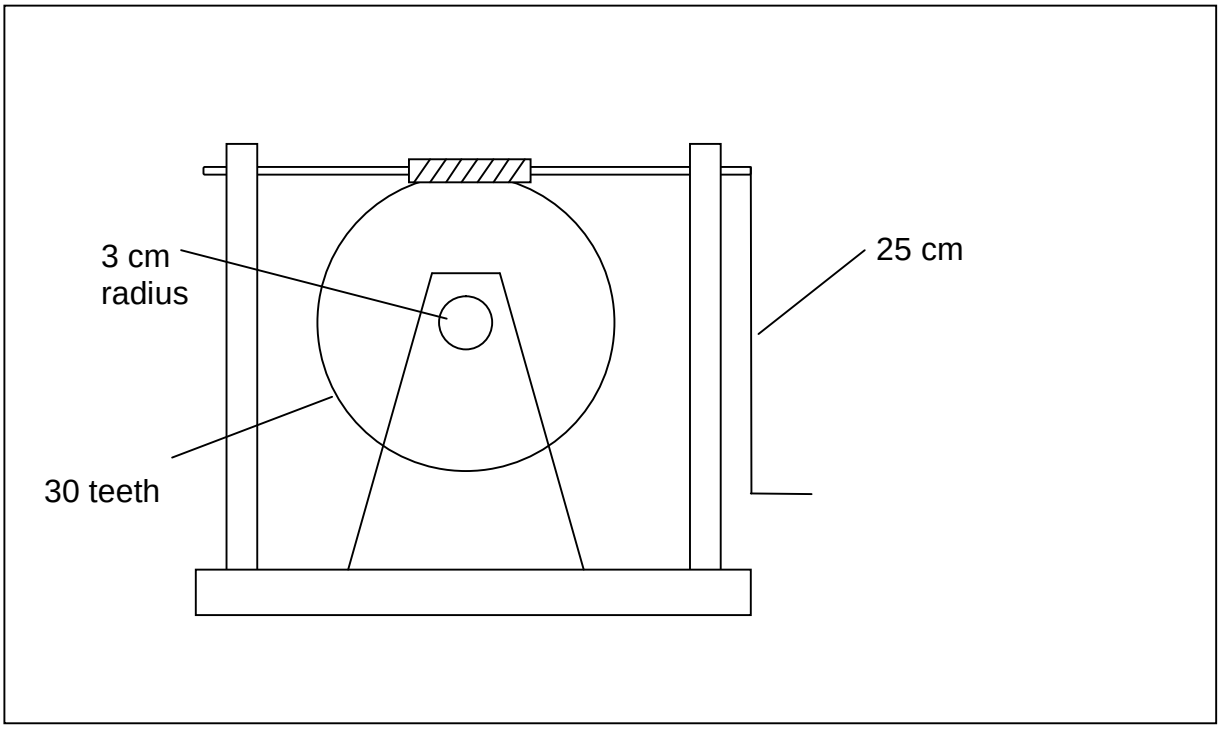

The mechanical advantage of this worm wheel winch is:

$$\frac{Radius_{Handle}}{Radius_{Axle}} \times \frac{NumberTeethOnWheel}{NumberOfTeethEachTurnOnHandle} = \frac{25cm}{3cm} \times \frac{30teeth}{1tooth} = 25 \times 10 = 250.$$

19.10 A small jackscrew has 20 threads to each inch. A lever 3.5 inches long will produce what mechanical advantage?

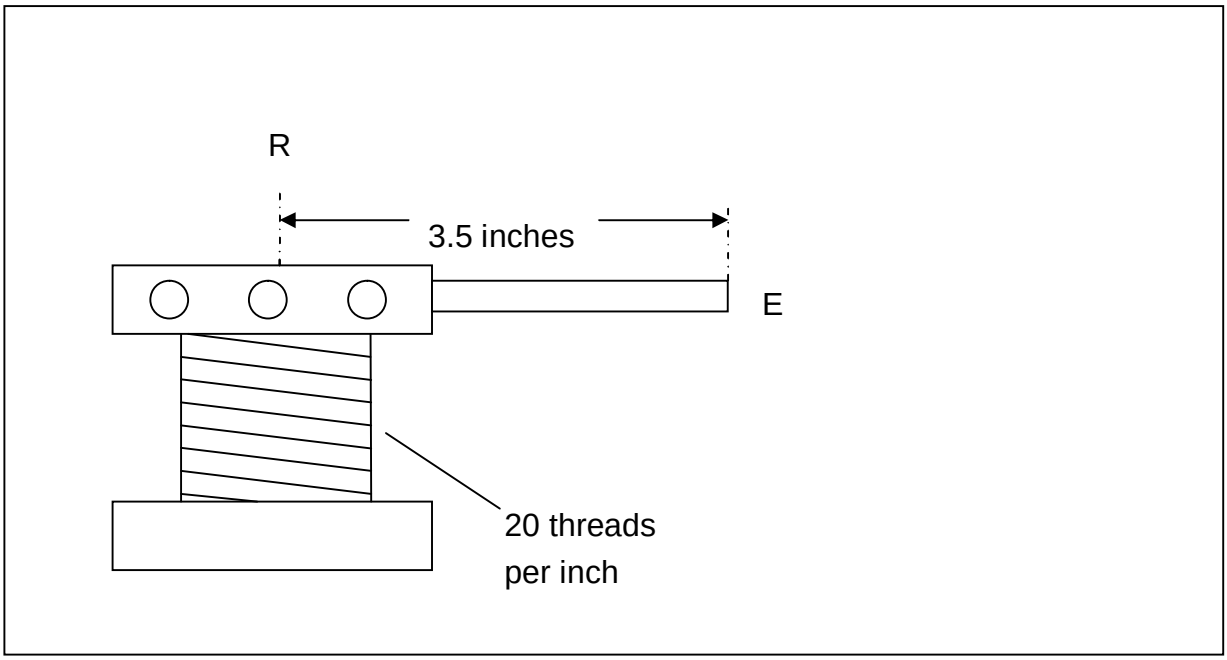

When the handle is turned around one time, the jack raises a distance of S = 1/20 in.

$$E \times 2\pi \cdot r = R \times S.$$

$$2\pi \times 3.5in \times E = \frac{R}{20} in. \Rightarrow \frac{R}{E} = \frac{2\pi \times 3.5in \times 20}{1in} \cong 440.$$

The mechanical advantage of this screw jack is about 440.

19.11 The screw of a letter press has 5 threads to the inch, and the diameter of the hand wheel is 12 inches. If there were no friction, what pressure would result from a rotating force of 20 lb applied to the wheel?

E = 20lb; r = 6 inches; S = 1/5 inch.

$$E \times 2\pi \cdot r = R \times S. \Rightarrow 20lb \times 2\pi \cdot 6in = Rlb \times 1/5in \Rightarrow Rlb = \frac{20lb \times 2\pi \cdot 6in}{1in/5} = 3770lb.$$

$$\Pr essure = \frac{Force}{Area} = \frac{3770lb}{Area}$$

For example, if the area of the letter press were to be 120in², The pressure would be 3770lb/120in² = 31.4 lb/in².

19.12 Eight jack screws, each of which has a pitch of ¼ inch and a lever arm of 18 inches are being worked simultaneously to raise a building weighing 100,000 pounds. What force would have to be exerted at each lever if there were no friction?

The mechanical advantage of one of the jacks is the distance the lever arm moved divided by ¼ inch.

$$\frac{2\pi \cdot r}{1/4in} = \frac{2\pi \cdot 18in}{1/4in} \cong 452.$$

Each jack must carry 1/8 of the total load of the house, or 100,000lb / 8 = 12,500lb.

R = 12,500lb.

$$\frac{R}{E} = MechanicalAdvantage \Rightarrow E = \frac{R}{MechanicalAdvantage} = \frac{12{,}500}{452} = 27.6lb.$$

This force would lift the house if there were no friction in the screw jacks.

If 75% of the work were lost to friction in the screw jacks, how much force would then be required for each jack.

Only one fourth of the work would be left as useful work, so the jacks must do four times as much work each. The force on each jack lever must be increased four times; 4 x 27.6lb = 110 lb / jack.

19.13 What is gained when using a machine having a mechanical advantage of ¼?

The distance moved by the resultant force is four times the distance moved by the force being exerted:

Name two or three household appliances whose mechanical advantage is less than 1.

Scissors, Tweezers.

20. Power and Energy

We first want to understand what **Energy** is.

When we do work, we lose energy. The energy we lost is equal to the work we accomplished.

Work and energy are, then, the same thing, but they exist in different forms.

***Work and energy have the same units. If we did 100 ft-lb of work, it required 100 ft-lb of energy from us to do the work.**

If a machine did 55 Newton-Meters of work, the machine required 55 Newton-Meters of energy from some energy source to do this work.

We possess within ourselves the capacity to do work, and this capacity to do work is what we call **ENERGY**.

***ENERGY is the capacity to do work.**

People have the capacity to do work; their energy comes from the food they eat.

Machines and tools have the capacity to do work; their energy must also come from some energy source (like electricity, gasoline, gas, previously pressurized gasses, solid fuels, heat sources, a human being, etc.).

We expended a certain amount of energy to do our work, but while we were doing our work we lost energy in other forms of energy and work in addition to the energy required to do our work (friction, changes in inertia, heat, sound, etc.). Energy is always lost to other forms of energy and work when we do the work we want to accomplish.

This is why we always have to exert more energy than is required to do a certain amount of work than the work alone requires.

Said another way, we got less work out of our energy than the energy we put into doing the work, because additional energy was lost to other forms of energy and work.

***We never get more out of a machine than we put into it for this reason. For every change in the form of energy that we cause, we experience an accompanying additional energy loss.**

We have come to recognize two kinds of energy, potential energy and kinetic energy.

A body possesses **potential energy** when its location, or position, gives the body the capacity to do work (for example, a raised stone that can fall on something and somehow change the object it strikes).

An object has **kinetic energy** when it is moving, giving the body the capacity to do work (for example, a moving body that can strike another object and change the motion of the object it strikes or change the object somehow).

We now want to understand what **power** is.

When we do work, we can do it immediately or we can do it over a longer period of time. We know that when we take longer to do work it is easier for us to do the work.

If we have to do the work very quickly, we can become strained and have sore muscles on the next day.

If we take a long time to do work we are working at a low power.

If we take a short time to do work we are working at high power.

***Power expresses how fast work is accomplished.**

***Power expresses how fast energy is used.**

If an electrical machine does 550 ft-lb of work in one second, we say that the machine is working at a work rate of one horsepower. The machine can do 550 ft-lb of work every second as long as it is working.

The machine develops one horsepower.

The electrical network provides a power of one horsepower to the machine.

The electrical energy taken from the network is converted into mechanical energy by the machine at a rate of one horsepower.

***Power is the time rate at which work is being accomplished, or energy is being expended**.

20.1 A stick of dynamite has great capacity for doing work. Before the explosion occurs, is the energy in the potential or the kinetic form?

The dynamite contains potential energy that is stored in chemical form.

20.2 Explain the use of sandblasting when cleaning metal castings, making frosted glass, cutting glassware, or cleaning the walls of stone buildings.

The sand particles are moving at a fast velocity. When they impact against another object, they lose their velocity almost immediately, causing a great deceleration. Since the resulting force = mass x deceleration, and the deceleration is very large, a great force is produced by each particle as it impacts some other object. Useful changes in the objects they strike are mentioned in the problem.

20.3 How much work is required to lift the 500 lb weight of a pile driver 30 feet? How much potential energy is then stored in it? How much work can it do when it falls?

$$Work_{accomplished} = Force_{applied} \times Dis\tan ce_{travelled} = 500lb \times 30\,ft = 15{,}000\,ft \cdot lb.$$

The pile driver acquired 15,000 ft-lb of potential energy when it was raised 30 ft, because it can fall against the force of gravity and perform work. The pile driver now possesses the capacity to do work because of its location, which is potential energy.

When the pile driver falls on some object, it accomplishes somewhat less than 15,000 ft-lb of work; some of the energy it had was changed into other forms of energy and work than the work intended to be accomplished (for example, heat and noise and dust that flew up from the ground around the area of impact, etc.).

We never get more out of something than we put into it.

20.4 A man weighing 198 lb walked to the top of the stairway of the Washington Monument (500 ft. high) in 10 minutes. At what horsepower rate did he work?

$\frac{198lb \times 500\,ft}{10\min} \times \frac{1\min}{60s} = 165\frac{ft \cdot lb}{s}$. The man is working at a rate of $165\frac{ft \cdot lb}{s}$; this power is the power the man was producing.

One horsepower is equal to $550\frac{ft \cdot lb}{s}$.

The man was working at a rate of $\frac{165\frac{ft \cdot lb}{s}}{1} \times \frac{1hp}{550\frac{ft \cdot lb}{s}} = \frac{3}{10} Horsepower$.

20.5 A farm tractor drew a gang plow at a rate of 2 ½ miles per hour, maintaining an average drawbar pull of 1,500lb. At what average horsepower was the tractor working?

$$\frac{5mi}{2hr} \times \frac{5280\,ft}{1mi} \times \frac{1hr}{60\min} \times \frac{1\min}{60s} \times \frac{1{,}500lb}{1} = 5{,}500\frac{ft \cdot lb}{s}.$$

One horsepower is equal to $550\frac{ft \cdot lb}{s}$.

The tractor was working at a rate of $\frac{5{,}500\frac{ft \cdot lb}{s}}{1} \times \frac{1hp}{550\frac{ft \cdot lb}{s}} = 10 Horsepower$.

20.6 In the course of a stream there is a waterfall 22 feet high. It is shown by measurement that 450 ft³ water per second pour over it. How many ft-lb of energy pour over the water fall? What horsepower?

Think of the waterfall as being 450 feet long. Then, in one second, a one foot high, 450 foot length of water would move forward one foot over the edge of the waterfall at the top, making a water flow of 450 Ft³ of water per second flow continuously over the waterfall.

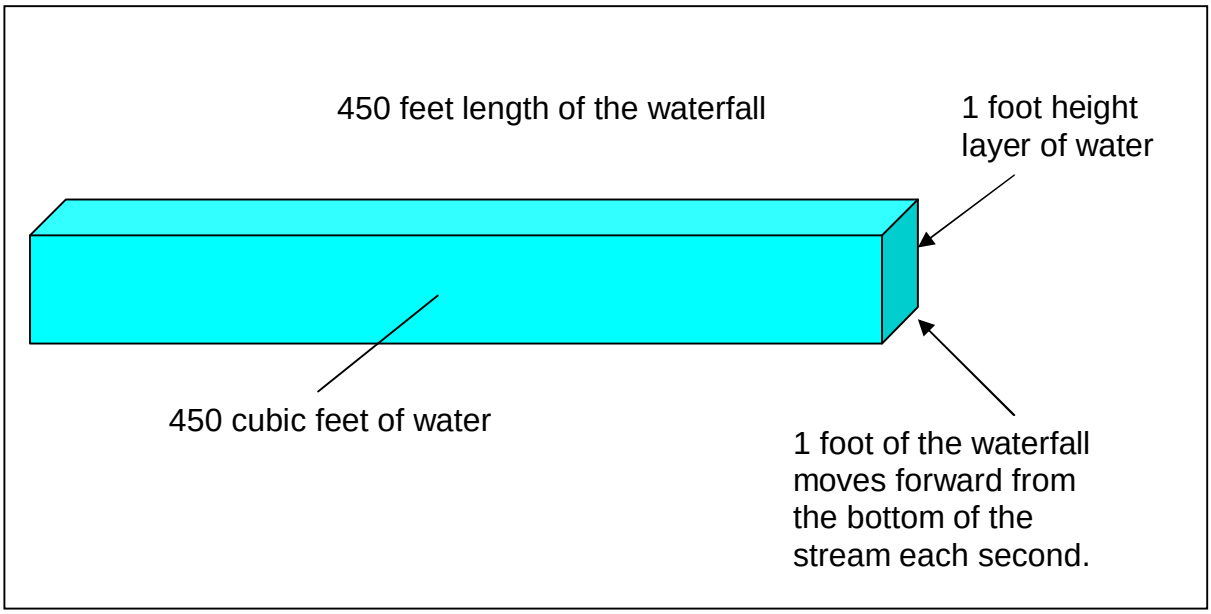

The weight of the water each second is: $\frac{450\,ft^3{}_{Water}}{1s} \times \frac{62lb}{1\,ft^3{}_{Water}} = \frac{27{,}900lb_{water}}{s}$.

Calculating the energy pouring over the waterfall:

This weight of water, 27,900lb, moves forward one foot during one second; so, during a one second time interval, the energy that pours over the waterfall is 1ft x 27,900 lb, or 27,900 ft-lb.

Calculating the power developed by the waterfall:

The waterfall is 22 feet high. The weight of 450 ft^3 of water is 27,900lb. The potential energy of this 450 ft^3 of water is its weight multiplied by its height from the bottom of the waterfall, or 27,000lb x 22ft = 594,000ft-lb. This 594,000 ft-lb of energy arrives at the bottom of the waterfall each second, so the power developed by the waterfall is 594,000 ft-lb / s.

Calculating the horsepower of the waterfall:

One horsepower is 550 ft-lb / s. The horsepower developed by the waterfall is:

$$\frac{594{,}000\,\frac{ft\cdot lb}{s}}{1}\times\frac{1hp}{550\,\frac{ft\cdot lb}{s}}=1{,}080horsepower\ .$$

20.7 How many gallons of water (8lb/gallon) could a 10 horsepower engine raise in one hour to a height of 60 feet?

The power required to raise the water must be equal to the power supplied by the 10 horsepower motor.

The final potential energy of the water is its weight, an unknown number of pounds which we will call Xlb, multiplied its height, 60 ft.

The power required to raise the water is: its final potential energy divided by the time it took to gain its final potential energy, one hour.

The power supplied by the 10 horsepower motor is 550 ft-lb / s multiplied by 10.

$$\frac{Xlb\times 60\,ft}{1hour}\times\frac{1hour}{3600s}=\frac{550\,\frac{ft\cdot lb}{s}}{1horsepower}\times\frac{10horsepower}{1}\Rightarrow\frac{60Xflbt}{3600s}=\frac{5500\,ft\cdot lb}{s}\ .$$

$$Xlb=\frac{5500\,ft\cdot lb}{s}\times\frac{3600s}{60\,ft}=330{,}000lb\,.$$

330,000 pounds of water were raised to a height of 60 feet during the one hour time period. One gallon of water weighs 8 pounds.

$$\frac{330{,}000lb}{8\,\frac{lb}{gallon}}=\frac{330{,}000lb}{1}\times\frac{1gallon}{8lb}=41{,}280gallons\ .$$

41,280 gallons of water can be raised to a height of 60 feet in one hour by a 10 horsepower engine.

20.8 A certain airplane using three 400 horsepower engines flew 80 miles per hour. With how many pounds of backward force did the propellers push against the air?

The power of the engines must be equal to the power of the propellers pushing on the air.

$$3 \times 400 horsepower \times \frac{550 \frac{ft \cdot lb}{s}}{1 horsepower} = Xlb \times 80 \frac{miles}{hour} \times \frac{5280\, ft}{mile} \times \frac{1 hour}{3{,}600 s} \Rightarrow 660{,}000 \frac{ft \cdot lb}{s} = 117.33 Xlb$$

X = 5,625lbs.

20.9 If a rifle bullet can just pass through a plank, how many planks will it pass through if its speed is doubled?

The kinetic energy of the bullet at its normal speed is $K.E. = \frac{mv^2}{2}$.

The kinetic energy of the bullet at twice its normal speed is $K.E. = \frac{m(2v)^2}{2} = \frac{4mv^2}{2} = 2mv^2$.

The increase in kinetic energy at twice the speed is $\frac{2mv^2}{\frac{mv^2}{2}} = 4$.

The new kinetic energy is four times as great, so the bullet will just go through 4 planks.

20.10 A steel ball dropped into a pail of moist clay from a height of 1 meter sinks to a depth of 2cm. How far will it sink if dropped from 4 meters?

The potential energy of the steel ball is $P.E. = mgh$.

The potential energy of the steel ball at a one meter height is $P.E. = mg \times 1m$.

The potential energy of the steel ball at a four meter height is $P.E. = mg \times 4m$.

The increase in potential energy of the steel ball when raising it from 1 meter to four meters is $\frac{mg \times 1m}{mg \times 4m} = 4$.

At four meters the steel ball will sink into the moist clay four times as deep as from one meter, or 4 x 2cm = 8cm.

20.11 Neglecting friction, find how much force a boy would have to exert to pull a 100 pound wagon up an incline which rises 5ft for every 100 ft of length traversed on the incline.

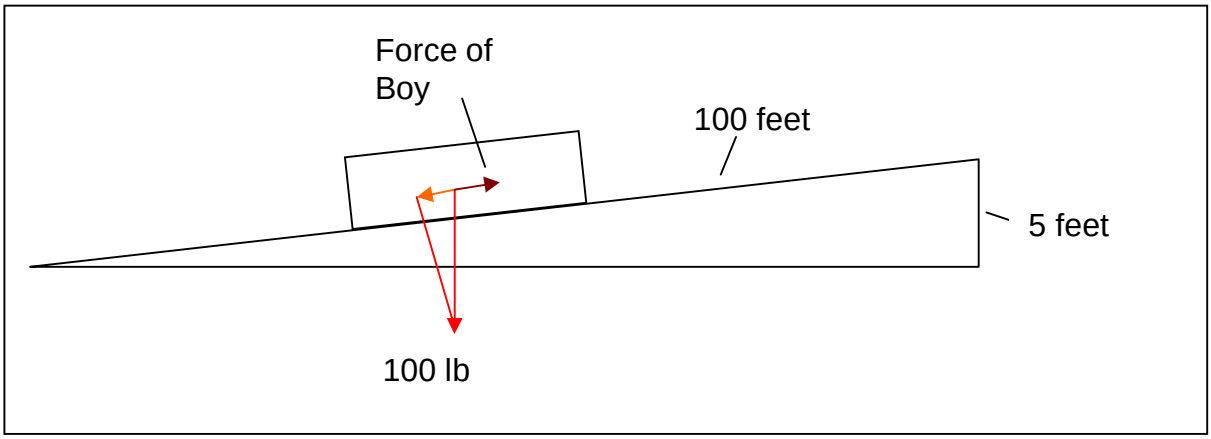

We could solve this problem by using trigonometry to calculate the component force of gravity moving the wagon backward, and use somewhat more than this value as the forward force that the boy must provide to move the wagon forward up the incline.

***Now that we know what work and energy are, however, it is much easier to use our new knowledge to solve this problem.**

The work that the boy did to move the wagon to its final position must be equal to the potential energy gained by lifting the wagon to its final position.

$$Work_{Boy} = PotentialEnergy_{Wagon} \Rightarrow Force_{Boy} \times 100\,ft = 100lb \times 5\,ft \Rightarrow Force_{Boy} = \frac{500\,ft \cdot lb}{100\,ft} = 5lb$$

The boy must push with a force somewhat greater than 5lb to move the wagon to its final position.

21. THERMOMETRY

In 1845 a mixture of ether and solid carbon dioxide in a vacuum produced a temperature of minus110 °C.

In 1880 the temperature of liquid air was found to be minus 190 °C.

In 1920 the temperature of liquid hydrogen was found to be minus 243 °C.

In 1911 the temperature of liquid helium was found to be minus 271.1 °C.

Mercury freezes at minus 39 °C and boils at 360 °C.

Alcohol freezes at minus 130 °C.

Gas thermometers are the only kind of thermometer accurate enough to conduct scientific research, because gasses have a constant rate of thermal expansion, 1/273 of their volume for degree centigrade of temperature change when the pressure on them and their volume is held constant.

$$\frac{Centigrade}{(Fahrenheit-32)}=\frac{5}{9}\Rightarrow Centigrade=\frac{5\times(Fahrenheit-32)}{9}\Rightarrow$$

$$Fahrenheit=\frac{9\times Centigrade}{5}+32.$$

21.1 Define 0 °C and 100 °C. What is 1 degree centigrade? What is 1 degree Fahrenheit?

Zero °C is the temperature at sea level at which water freezes.

One hundred °C is the temperature at sea level at which water boils.

One degree centigrade is 1/100th of the temperature difference between 0 °C and 100 °C.

Thirty-two °F is the temperature at sea level at which water freezes.

Two hundred and twelve °F is the temperature at sea level at which water boils.

One degree Fahrenheit is 1/180th of the temperature difference between 32 °F and 212 °F.

21.2 A study of the behavior of gasses brings us to conclude that there is a temperature at which molecules are at rest and therefore produce no heat. Give the reasoning that leads to this conclusion.

If heat is determined to be the energy of moving molecules, then no molecular action would mean that no heat is present.

21.3 Normal room temperature is 68 °F. What temperature is this expressed in °C?

$$C=\frac{5}{9}(F-32)\Rightarrow C=\frac{5}{9}(68-32)=\frac{5}{9}(36)=20°C\ .$$

21.4 The normal temperature of the human body is 98.6 °F; what is this temperature in °C?

$$C = \frac{5}{9}(F - 32) \Rightarrow C = \frac{5}{9}(98.6 - 32) = \frac{5}{9}(66.6) = 37°C.$$

21.5 What temperature centigrade corresponds to zero °F?

$$C = \frac{5}{9}(F - 32) \Rightarrow C = \frac{5}{9}(0 - 32) = \frac{5}{9}(-32) = -18\frac{2}{3}°C.$$

21.6 Mercury freezes at about -40 °C. What is this temperature expressed in Fahrenheit?

$F = \frac{9}{5}C + 32 = \frac{9}{5}(-40) + 32 = -72 + 32 = -40°$. We notice that -40 degrees is the same temperature on both Centigrade and Fahrenheit scales.

21.7 The temperature of liquid air is -190 °C. What is this temperature expressed in Fahrenheit?

$$F = \frac{9}{5}C + 32 = \frac{9}{5}(-190) + 32 = -342 + 32 = -310°.$$

21.8 The lowest temperature attainable by evaporating liquid helium is -271.3 °C. What is this temperature expressed in Fahrenheit?

$$F = \frac{9}{5}C + 32 = \frac{9}{5}(-271.3) + 32 \cong -488 + 32 \cong -456°.$$

21.9 What is the absolute zero of temperature on the Fahrenheit scale?

Absolute zero on the centigrade scale is -273 degrees.

$$F = \frac{9}{5}C + 32 = \frac{9}{5}(-273) + 32 = -491.4 + 32 \cong -459.4°$$

21.10 Why is a fever thermometer made with a very long cylindrical bulb instead of a spherical bulb?

This is done to increase the surface area of the mercury in the bulb to which heat can be transferred from the body; this construction shortens the time required to make an accurate reading of body temperature.

21.11 When the bulb of a thermometer is placed in hot water, it at first falls a little and afterward rises. Why?

The rapidly moving hot water molecules hit the glass molecules on the outside of the glass bulb, increasing their velocities (making the glass bulb warmer). This action on a macroscopic scale increases the volume inside of the glass bulb, which causes the level liquid in the bulb to fall a little. The molecules of glass continue to strike each other until eventually the glass molecules on the inside of the bulb also greatly

increase their mean velocity (become hot). These glass molecules now strike the liquid in the bulb with which they are in contact, causing these liquid molecules to move faster (to warm). As the other molecules of the liquid in the bulb become warmer, the liquid rises in the thermometer to register the temperature of the substance the thermometer is physically in contact with (in this case, hot water).

21.12 How does the distance between the “0” mark and the “100” mark vary with the size of the bore, the size of the bulb remaining the same?

The size of the bulb determines how much liquid inside of the bulb will leave the bulb because of a certain temperature increase. If the size of the bore in the cylinder of the thermometer is changed, the amount of liquid leaving the bulb still remains the same (the volume of liquid leaving the bulb at a certain temperature does not change, it remains constant).

If the size of the bore of the thermometer cylinder is decreased (the cross sectional area of the rising liquid in the cylinder of the thermometer becomes smaller), the liquid in the cylinder of the thermometer must climb higher to maintain its volume.

If the bore of the thermometer cylinder is increased (the cross sectional area of the rising liquid cylinder in the thermometer becomes larger), the liquid in the cylinder of the thermometer will rise to a lower height when maintaining its volume.

21.13 What is meant by the absolute zero of temperature?

Absolute zero describes the state in matter where all molecular motion stops. This temperature is, theoretically speaking, -273 °C.

21.14 Why is the temperature of liquid air lowered if it is placed in a vacuum?

The faster moving molecules of liquid air that escape from the surface of the liquid air as a gas enter an area above the liquid where they can not readily strike other molecules and have their direction changed to cause them to re-enter the liquid air. The average velocity of the molecules in the liquid air becomes less, so the temperature of the liquid air is lowered.

21.15 Two thermometers have bulbs of equal size. The bore of one has a diameter twice that of the other. What are the relative lengths of the stems between 0 and 100 °C?

The cross-sectional area of the first bore is $Area_{Bore1} = \pi \cdot r^2$.

The cross-sectional area of the second bore is $Area_{Bore2} = \pi \cdot (2r)^2 = 4\pi \cdot r^2$.

The volume of the liquid in the first thermometer is $Volume1 = \pi \cdot r^2 \cdot h$.

The volume of the liquid in the second thermometer is the same. $Volume2 = \pi \cdot r^2 \cdot h$.

This is true when the height in the second thermometer is only ¼ of the height in the first thermometer, because $Volume2 = 4\pi \cdot r^2 \times \frac{h}{4} = \pi \cdot r^2 \cdot h$.

The thermometer having the smaller bore has a stem 4 times longer than the thermometer having the larger bore.

22. COEFFICIENTS OF EXPANSION

First, we need to learn something about gasses to understand their coefficient of expansion.

If we hold the volume of a gas constant and increase its temperature, we find that for every one degree centigrade increase in temperature, the pressure of the gas increases by 1/273. If we hold the volume of a gas constant and decrease its temperature, we find that for every one degree centigrade decrease in temperature, the pressure of the gas decreases by 1/273. We find that this is true for all gasses, no matter what they are.
This is a gas law that is known as Charles law.

If we hold the pressure of a gas constant and increase its temperature, we find that for every one degree centigrade increase in temperature, the volume of the gas increases by 1/273. If we hold the pressure of a gas constant and decrease its temperature, we find that for every one degree centigrade decrease in temperature, the volume of the gas decreases by 1/273. We find that this is true for all gasses, no matter what they are.
This is a gas law that is known as Gay-Lussac's law.

From Charles law we learn that $\frac{P_1}{P_2} = \frac{T_1}{T_2}$. From Gay-Lussac's law we learn that $\frac{V_1}{V_2} = \frac{T_1}{T_2}$.
If we allow the temperature, pressure and volume of a gas to change, we find that $\frac{P_1V_1}{P_2V_2} = \frac{T_1}{T_2}$. This formula is the general gas law.

When working with gasses, we always work with the temperature expressed in degrees Kelvin to obtain the answer to a problem, and then convert the answer in degrees Kelvin to other measures (to centigrade and then to Fahrenheit, if required).

One degree Kelvin (1°K) is exactly the size of one degree centigrade (1°C).

Zero °C exactly equals 273 °K.

$$Centigrade = Kelvin - 273\,\text{degrees}.$$

$$Kelvin = Centigrade + 273\,\text{degrees}.$$

22.1 To what temperature must a cubic foot of gas initially at 0 °C be raised to double its volume if its pressure remains constant?

Zero °C equals 273 degrees K.

$$\frac{V_1}{V_2} = \frac{T_1}{T_2} \Rightarrow \frac{V_1}{2V_1} = \frac{273°K}{T_2} \Rightarrow T_2 = 2 \times 273°K = 546°K = 273°C.$$

22.2 If the volume of air at 30 °C is 200 cm³, at what temperature will its volume be when it is 300cm³?

Thirty °C is 273 + 30 degrees Kelvin, or 303 degrees Kelvin.

$$\frac{V_1}{V_2} = \frac{T_1}{T_2} \Rightarrow \frac{200cm^3}{300cm^3} = \frac{303°K}{T_2} \Rightarrow T_2 = 303°K \times \frac{300cm^3}{200cm^3} = 454.5°K = 181.5°C.$$

22.3 If the air within a bicycle tire is under a pressure of 2 atmospheres, i.e., 152 cm Hg, when the temperature is 10 °C (283 degrees Kelvin), what pressure will exist in the tube when the temperature changes to 35 °C (308 degrees Kelvin)?

$$\frac{P_1}{P_2} = \frac{T_1}{T_2} \Rightarrow \frac{2}{P_2} = \frac{283°K}{308°K} \Rightarrow P_2 = \frac{2 \times 308°K}{283°K} = 2.17 Atmospheres.$$

22.4 If the pressure to which 15cm³ of air is subjected changes from 76cm Hg to 40 cm Hg, the temperature remaining constant, what does its volume become?

$$P_1 \cdot V_1 = P_2 \cdot V_2 \Rightarrow V_2 = \frac{P_1 \cdot V_1}{P_2} = \frac{15cm^3 \times 76cm_{Hg}}{40cm_{Hg}} = 28.5cm^3.$$

22.5 The air within a half-filled balloon occupies a volume of 100,000 liters. The temperature is 15 °C, and the barometric pressure is 75cm Hg. What will be the volume of air in the balloon after the balloon has risen to the height of Mt. Blanc, where the pressure is 37cm Hg and the temperature is -10 °C?

Fifteen °C is 288 degrees Kelvin.
Minus ten °C is 263 degrees Kelvin.

$$\frac{P_1V_1}{P_2V_2} = \frac{T_1}{T_2} \Rightarrow V_2 = \frac{P_1V_1T_2}{P_2T_1} = \frac{75cm_{Hg} \times 100{,}000L \times 263°K}{37cm_{Hg} \times 288°K} = 185{,}107L.$$

23. APPLICATIONS OF EXPANSION

Now, we need to learn something about liquids and solids to understand their coefficients of expansion.

The coefficients of expansion of liquids and solids are irregular; the amount they expand or contract with temperature changes is not always the same, like it is with gasses.

Liquid mercury has an almost constant coefficient of expansion as a liquid, and for that reason is used in making thermometers. When water is cooled, it contracts until it reaches a temperature of 4 °C, and then it expands again as it is cooled further.

The coefficients of expansion of some liquids between 0 and 10 °C are:

Alcohol 0.0011, Ether 0.0015, Mercury 0.000181, Petroleum 0.0019

The coefficient of expansion of solids is determined as follows. We use a length of a small rod of the solid (or some other slender form having a small cross-section compared to its length, perhaps a square or rectangular bar). We measure the change in the length of the rod that corresponds to a known temperature change. The temperature coefficient is defined by dividing the *change in length of the rod* by the *length of the rod*, and then dividing this answer by the number of degrees of the temperature change, measured in °C. We call this the *linear coefficient of expansion* of the solid.

The linear coefficients of expansion of some solids are:

Aluminum 0.000023, Brass 0.000019, Copper 0.000017, Glass 0.000009, Gold 0.000014,

Iron 0.000014, Lead 0.000029, Platinum 0.000009, Silver 0.000019, Steel 0.000013, Tin 0.000023, Zinc 0.000030

23.1 Why is the water at the bottom of a lake usually colder than at the top?

The colder, denser water will fall to the bottom of a lake, and the warmer lighter layers of water will rise and float above it.

Why is the water at the bottom of very deep mountain lakes in some instances observed to be 4 °C the whole year round, while that at the top varies from zero °C to quite warm?

Water has its highest density at 4 °C, and will sink to the bottom of any body of water it is in to occupy the lowest position in that body (lakes, ponds, water tanks, etc.). When all of the water in a lake has become 4 °C, further cooling *at the surface of the water* causes the water to become less dense (lighter) than the 4 degree centigrade water immediately under it, so it stays on the surface and continues to cool until it freezes. For this reason, all of the water in a body of water must have reached 4 °C before the water on the surface of the body of water will freeze.

When frozen water is warmed by the sun and reaches a temperature above 4°C, it is again less dense (lighter) than the 4°C water under it; it stays on the top of the water body (on the surface) and warms further. However, the underlying water at 4 °C is *most of the water in the body*, and it requires a great amount of heat to warm it above 4 °C again.

Four °C is therefore the temperature of most of the water in a *deep* lake that has frozen over on its surface in winter. The summer sun can not raise it above this temperature again, and it remains at 4°C the entire year.

23.2 Give three reasons why mercury is a better liquid to use in thermometers than water.

Mercury freezes at -39 °C, which is seldom reached in areas where people live. Water freezes at zero °C, which would break the bulb it is in, making the thermometer useless.

Mercury has an almost constant rate of thermal expansion (0.000181). Water has its greatest density at 4 °C, below and above this temperature it is less dense; water has a much more varying coefficient of expansion than mercury.

Mercury first boils at +360 °C. Water boils at 100 °C and begins to build up pressure fast in a closed container that can destroy the container (the body of the thermometer).

23.3 Why is a thick glass more likely to break when hot water is poured into it than a thin glass?

The thicker the glass is, the more it will expand due to its linear coefficient of expansion. The expansion will be more in the hotter part of the glass than in the cooler parts of the glass. The difference in linear expansion of the glass contacting the hot water in the glass compared to the slower expansion on the outside wall of the glass can become great enough to break the glass.

23.4 Pendulums can be compensated for thermal expansion using cylinders of mercury. Explain how this can happen.

The pendulum acts as though all of its mass is at its center of gravity. When the pendulum becomes warmer, it becomes longer and its center of gravity moves downward; the pendulum begins to move more slowly. If two small cylinders of mercury are attached to the sides of the pendulum, their centers of gravity begin to move upward when temperature increases. The downward movement of the center of gravity of the pendulum is compensated by the upward movement of the center of gravity of the mercury in the cylinders, holding the center of gravity formed by the pendulum and cylinders of mercury almost constant.

23.5 The steel cable from which the Brooklyn Bridge hangs is more than a mile (5,280 feet) long. By how many feet does a mile of its length vary between a winter day when the temperature is minus 20 °C and a summer day when the temperature is plus 30 °C?

The change in temperature ΔT, is +50 °C. The linear coefficient of expansion of steel is 0.000013 for each degree centigrade. The change in length of the steel cable ΔL is equal to the change in temperature multiplied by the linear coefficient of expansion of steel multiplied by the starting length L of one mile (we will assume that at -20 °C the cable is one mile long).

$$\Delta L = \Delta T \times \frac{0.000013}{1°C} \times L = \frac{50°C}{1} \times \frac{0.000013}{1°C} \times \frac{5{,}280\,ft}{1} = 3.43\,ft\,.$$

23.6 If a surveyor's steel tape is exactly 50 meters long at 20 °C, how much too short would it be at zero °C?

$$\Delta L = \Delta T \times \frac{0.000013}{1°C} \times L = \frac{-20°C}{1} \times \frac{0.000013}{1°C} \times \frac{5000cm}{1} = 0.65cm \times \frac{10mm}{cm} = 6.5mm\ .$$

23.7 A certain glass flask is graduated to hold 1000cm³ at 15 °C. How many cm³ of water will the flask hold at 40 °C if the cubic coefficient of expansion of the glass is 0.000025?

$$\Delta T = (40 - 15)°C = 25°C\ .$$

$$\Delta V = \Delta T \times \frac{0.000025}{1°C} \times V = \frac{25°C}{1} \times \frac{0.000025}{1°C} \times \frac{1000cm^3}{1} = 0.625cm^3\ .$$

At 40 °C the flask will hold 1000.625cm³ when it is filled to the 1000cm³ graduation mark on the flask.

23.8 A dial thermometer is made using a two metal strip with iron on the outside and brass on the inside. Explain how it works.

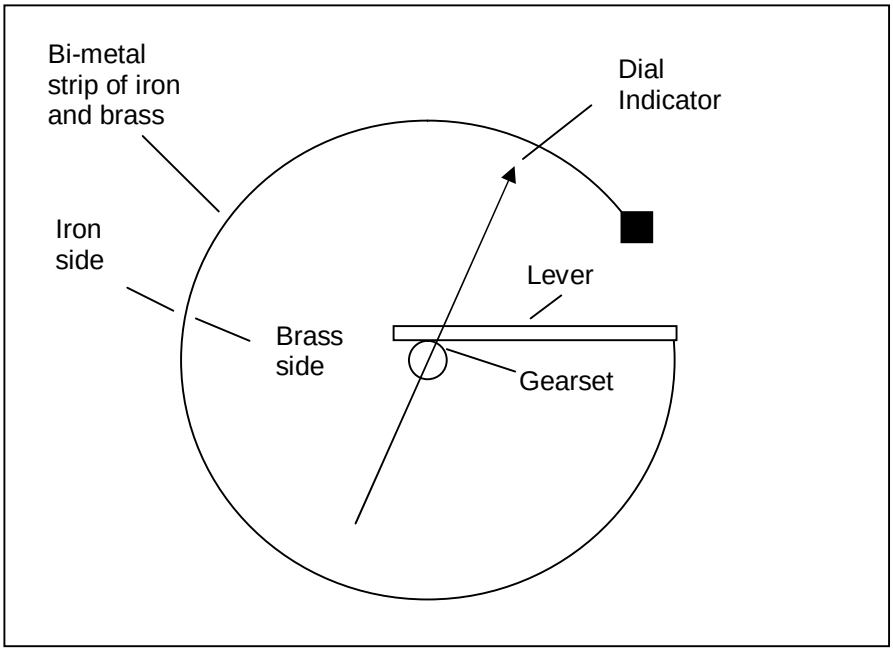

As the temperature rises, the bi-metal strip, formed as a circle, expands. The iron on the outside of the compound strip has a linear coefficient of expansion (0.000012) that is smaller than that of brass (0.000019) on the inside of the strip. The brass expands lengthwise *faster than* the iron, causing the circular form of the strip to enlarge.

The lever of a set of gears is attached to the strip which moves toward the right when the strip expands. The teeth on the lower left end of the lever are engaged with the teeth on the top of the gear located at the center of the dial, causing the gear to rotate clockwise as the lever moves toward the right. A dial indicator is attached to the gear. The rotation of the gear clockwise moves the dial indicator toward the right. A scale is behind the dial indicator to show the current temperature.

23.9 Why can a glass stopper sometimes be loosened by pouring hot water over the neck of the bottle it is stuck in?

When hot water is poured over the neck of the bottle, the glass molecules of the bottle neck become heated, which increases their average velocity. They strike each other harder now, which increases the average distance between them slightly; this action eventually increases the inside diameter of the bottle neck slightly. If this increase is large enough, the stopper can be freed from its stuck position in the bottle neck.

It is important to heat only the bottle neck; if the stopper is heated by the hot water at the same time the bottle neck is heated, both will expand and the stopper has a good chance of remaining stuck.

23.10 A metal rod 230cm long expanded 2.75mm when heated from 0 °C to 100 °C. Find its coefficient of linear expansion.

$$\Delta L = \Delta T \times \frac{CoefficientOfLinearExpansion}{1°C} \times L \Rightarrow CoefficientOfLinearExpansion = \frac{\Delta L \times 1°C}{L \times \Delta T}.$$

$$CoefficientOfLinearExpansion = \frac{\Delta L \times 1°C}{L \times \Delta T} = \frac{2.75mm \times 1°C}{2300mm \times 100°C} = \frac{2.75}{230000} \cong 0.000012.$$

This metal rod could be iron, but it could also be a mixture of other metals (a metallic alloy).

23.11 The changes in temperature to which long lines of steam pipes are subjected make it necessary to install "expansion joints" between them. These joints consist of brass collars fitted tightly with packing over the separated ends of two lengths of pipe. If the pipe is made of iron and such a joint is inserted every 200 feet, and if the temperature range in which the pipes must function is from -30 °C to 125 °C, what is the minimum "play" that must be allowed at each expansion joint?

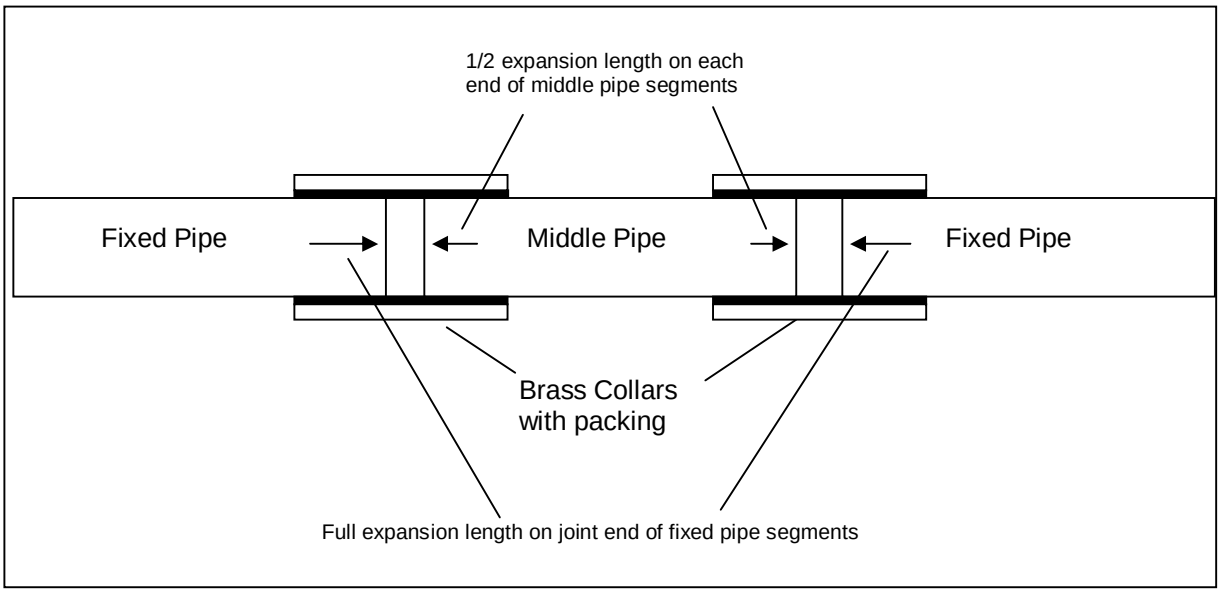

When a fixed pipe at each end of the steam line expands, its full expansion must be taken up by the expansion joint. For a middle pipe, each expansion joint must allow for ½ of the expansion length of the pipe.

The brass collars must account for one and one-half of the pipe segment expansion at the fixed ends of the pipe.

Other brass collars that account for one pipe segment expansion could be used for the middle pipe segments.

$\Delta T = 120 - (-30)°C = 155°C.$ The length of a pipe segment is L=200 feet.

$$\Delta L = \Delta T \times \frac{0.000012}{1°C} \times L = \frac{155°C}{1} \times \frac{0.000013}{1°C} \times \frac{200\,ft}{1} = 0.372\,ft \times \frac{1\,ft}{12in} \cong 4.47in.$$

Collars connecting the middle pipe segments of the steam line must allow at least for 4.47inches of expansion.

Collars connecting the fixed end pipe segments of the steam line must allow for at least 1.5 X 4.47inches, or 6.7 inches of expansion.

***If the fixed pipe segments are not 200 feet long, perhaps only 5 feet long or less, then only one size of expansion collar must be used for the entire system.**

23.12 Show that the equation for the linear coefficient of expansion can be defined as the increase in length per unit length per degree.

The equation for the linear coefficient of expansion is:

$$K = \frac{\frac{l_2 - l_1}{t_2 - t_1}}{l_1} = \frac{\frac{l_2 - l_1}{t_2 - t_1}}{l_1} \times \frac{\frac{1}{l_1}}{\frac{1}{l_1}} = \frac{\frac{l_2 - l_1}{(t_2 - t_1) \times l_1}}{1} = \frac{l_2 - l_1}{(t_2 - t_1) \times l_1} = \frac{\Delta L}{\Delta T \times L}.$$

The increase in length per unit length is $\frac{\Delta L}{L}$.

The increase in length per unit length per degree is $\frac{\frac{\Delta L}{L}}{\Delta T} = \frac{\frac{\Delta L}{L}}{\Delta T} \times \frac{\frac{1}{\Delta T}}{\frac{1}{\Delta T}} = \frac{\frac{\Delta L}{\Delta T \times L}}{1} = \frac{\Delta L}{\Delta T \times L}$. This equation is the same as the equation for the linear coefficient of expansion.

24. FRICTION

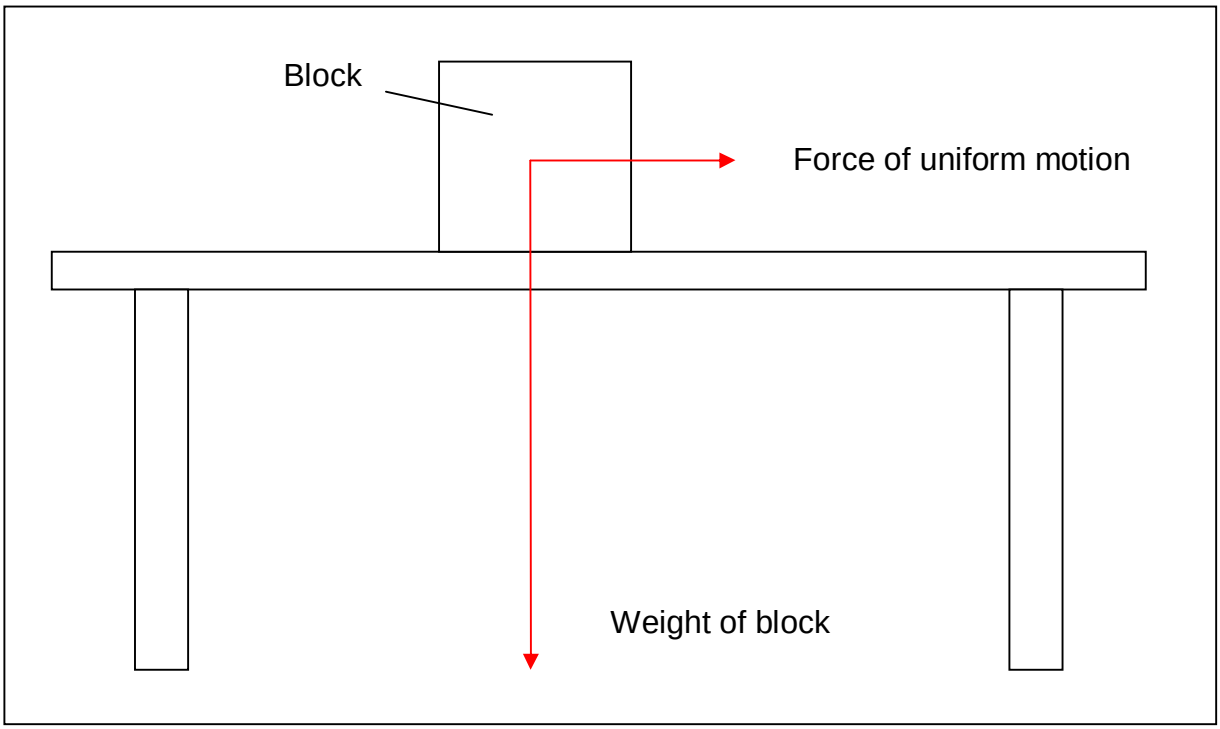

The coefficient of friction between the block and the table is defined as the force keeping the block in uniform motion divided by the weight of the block.

24.1 Mention three ways of lessening friction in machinery.

Use rolling instead of sliding friction whenever possible.

Keep the speed of moving parts as slow as possible.

Ensure proper lubrication of moving parts.

24.2 How is friction an advantage, and how a disadvantage in everyday life?

Advantages are: walking and running, tire on the road, belt and pulley drives, grinding, cutting, and sharpening.

Disadvantages are: loss of efficiency due to generation of heat.

Could we get along without friction?

No, friction is necessary for us to live in our everyday lives.

24.3 Why is a stream swifter at the center than at the banks?

The liquid in contact with solid banks and bed encounters more friction than the pure fluid friction in the middle of a stream, creek, or river.

24.4 Why does a team of horses have to keep pulling after a load is started?

The resistance force of rolling friction must still be overcome by an equal and opposite force to maintain the load's velocity.

24.5 Why is sand often placed on a train track to start a heavy train?

The sand changes the strength of friction between the train wheel and the rail. Sliding friction iron to iron is less than sliding friction sand to iron.

24.6 In what way is friction an advantage in lifting buildings with a jackscrew?

Friction prevents the base and the head of the jackscrew from slipping sideways out of position, which would cause the building to fall.

How is friction a disadvantage?

Friction between the threads of the screw and the jack cause a large force of resistance, which must be offset by a longer jack lever or more force to operate the jackscrew.

24.7 A smooth block is 10 x 8 x 3 cm. Compare the distances it will slide when given a certain initial velocity on smooth ice if resting first on a 10 x 8 face; second on a 10 x 3 face; third on an 8 x 3 face.

The block will reach the same distance no matter what face it stands on. For the largest face area, the pressure on the surface in contact with the ice will be less, but the number of projections interlocking between the two surfaces will increase. For smaller face areas, the pressure on the surface in contact with the ice will increase, but the number of projections interlocking between the two surfaces will be less. The net effect is the same, causing the average forces of resistance due to friction in all cases to be equal.

24.8 What is the coefficient of friction of brass on brass if a force of 25lb is required to maintain uniform motion of a brass block weighing 200lb?

The coefficient of friction is equal to the force required to sustain uniform motion divided by the weight of the block being moved:

$$CoefficientOfFriction = \frac{Force_{UniformMotion}}{Weight_{Block}} = \frac{25lb}{200lb} = 0.125.$$

24.9 The coefficient of friction between a block and a table is 0.3. What force will be required to keep a 500gm block in uniform motion?

$$CoefficientOfFriction = \frac{Force_{UniformMotion}}{Weight_{Block}} \Rightarrow Force_{UniformMotion} = CoefficientOfFriction \times Weight_{Block}.$$

$$Force_{UniformMotion} = CoefficientOfFriction \times Weight_{Block} = 0.3 \times 500gm = 150gm.$$

25. EFFICIENCY

25.1 Why is the efficiency of the jackscrew low and that of the lever high?

There is a high loss of work due to overcoming the forces of friction when using a jackscrew; this kind of friction is sliding friction. The lever rolls on its fulcrum, which is rolling friction. Rolling friction is much less than sliding friction; the work loss when using a lever is therefore much less than the work loss when using a jackscrew. The efficiency of the jackscrew is therefore less than the efficiency of a lever.

25.2 Find the efficiency of a machine in which an effort of 12lb moving 5ft raises a weight of 25lb 2ft.

The work accomplished is 25lb x 2ft = 50ft.lb.

The work expended is 12lb x 5ft = 60ft.lb.

$$Efficiency = \frac{WorkAccomplished}{WorkExpended} = \frac{50\,ftlb}{60\,ftlb} = 0.833 \cong 83\%.$$

25.3 What amount of work was done on a block and tackle having an efficiency of 60% (3/5) when by means of it a weight of 750lb was raised 50ft?

$$Efficiency = \frac{WorkAccomplished}{WorkExpended} \Rightarrow \frac{3}{5} = \frac{50\,ft \times 750lb}{WorkExpended} \Rightarrow WorkExpended = \frac{37500\,ftlb \times 5}{3}.$$

$$WorkExpended = 62{,}500\,ftlb.$$

25.4 A force pump driven by a 1 horsepower engine lifted 4ft³ of water in one minute to a height of 100ft. What was the efficiency of the pump?

One ft³ of water weighs 62lb. Four ft³ of water weigh 4 x 62lb = 248lb.

$$WorkAccomplished = 248lb \times 100\,ft = 24800\,ftlb.$$

$$WorkExpended = 1hp \times 1\min = \frac{550\,ftlb}{s} \times \frac{60s}{1} = 33{,}000\,ftlb.$$

$$Efficiency = \frac{WorkAccomplished}{WorkExpended} = \frac{24{,}800\,ftlb}{33{,}000\,ftlb} \cong 0.75 = 75\%.$$

25.5 If it is necessary to pull on a block and tackle with a force of 100lb to lift a weight of 300lb, and if the force must move 6ft to raise the weight 1 ft, what is the efficiency of the system?

$$Efficiency = \frac{WorkAccomplished}{WorkExpended} = \frac{300lb \times 1\,ft}{100lb \times 6\,ft} = \frac{300\,ftlb}{600\,ftlb} = 0.5 = 50\%.$$

25.6 If the efficiency had been 65% in problem 25.5, what force would have been required to lift the weight?

$$Efficiency = \frac{WorkAccomplished}{WorkExpended} \Rightarrow \frac{65}{100} = \frac{300lb \times 1\,ft}{Xlb \times 6\,ft} \Rightarrow Xlb = \frac{300\,ftlb \times 100}{6\,ft \times 65} \cong 77lb.$$

At 65% efficiency it is necessary to move a force of 77lb six feet to lift 300lb one foot.

25.7 The Niagara turbine pits are 136ft deep, and their average horsepower is 5000. The turbines are 85% efficient. How much water does each turbine discharge per minute?

$$\frac{5000hp}{1} \times \frac{550\,ftlb/s}{1hp} = \frac{2750000\,ftlb}{s} \Rightarrow \frac{2750000\,ftlb}{s} \times \frac{60s}{1} = 165{,}000{,}000\,ftlb\,.$$

In one minute, one turbine does 165 million ft-lb of work; which is the *work accomplished.*

$$Efficiency = \frac{WorkAccomplished}{WorkExpended} \Rightarrow \frac{85}{100} = \frac{165{,}000{,}000lbft}{Xlbft} \Rightarrow Xlb = \frac{165{,}000{,}000\,ftlb \times 100}{6\,ft \times 85}\,.$$

$Xftlb = 194{,}117{,}647\,ftlb$. The *work expended* in this one minute time period was 194,117,647 ft-lb.

The distance the water fell was 136ft, so the weight of the water that went through the turbine in one minute must be equal to the *work expended* by the water divided by the distance the water fell.

$$WeightOfWaterInOneMinute = \frac{WorkOfWaterInOneMinute}{Dis\tan ceOfFall} = \frac{194{,}117{,}647\,ftlb}{136\,ft} = 1{,}427{,}335lb.$$

One ft³ of water weighs 62lb, so the volume of water in ft³ that went through the turbine in one minute must be the total weight of water that went through the turbine in one minute divided by 62.

$$\frac{1{,}427{,}335lb}{\frac{62lb}{1\,ft^3}} = \frac{1{,}427{,}335lb}{1} \times \frac{1\,ft^3}{62lb} = 23{,}021.5\,ft^3\,.$$

Each turbine discharges 23,021.5 ft³ of water each minute when each is producing 5000hp.

26. MECHANICAL EQUIVALENT OF HEAT

26.1 Show that the energy of a waterfall is merely transformed solar energy.

Radiant energy from the sun (Alpha-, Beta-, and Gamma-particles, etc.) strikes the gas molecules of our atmosphere, increasing their mean velocity (heating the atmosphere). The greatest heating of these molecules is nearest the earth, because most of the earth's atmosphere is at this location, and the surface of the earth itself is heated and gives this heat up to the air directly in contact with it. This warmed air, being less dense than the cold air above it is pushed away by the colder air above it falling downward. The warm air begins to rise and cause air currents. The warming of the oceans combined with these warm air currents causes surface water of the oceans to evaporate and rise with the warm air. Warm air can hold more water than cold air. As the warm air rises, it cools and can no longer hold all of the evaporated water in it; some evaporated water condenses on finest dust particles in the air and falls to the earth as precipitation (rain, sleet, snow, etc.) forming snow caps, glaciers, and mountain streams. Much of this water eventually reaches rivers where some of it is directly returned to the ocean. The energy of a waterfall, then, is only a part of energy that originally reached the earth from the sun, as is true of all energy available on the earth to support life.

26.2 Analyze the transformations of energy which occur when a bullet is fired vertically upward.

Gas pressure caused by the explosion of powder drives the bullet forward. Chemical energy (originally stored in the powder) has been transformed into kinetic energy (energy of motion of the bullet) and heat (friction between the bullet and the barrel of the gun, *energy loss 1* as well as sound as the bullet exits the barrel of the gun *energy loss 2*). Some of the bullets initial kinetic energy(translational and rotational) as it left the barrel is lost to air resistance as it moves through the atmosphere, begins to tumble and acquire or lose rotational energy, and heats the air and itself while it rises, *energy loss 3*. The rest of the kinetic energy of the bullet is continually converted to potential energy as it slows down against the force of gravity. When the bullet stops at its highest point, all of the remainder of its kinetic energy has been transformed into potential energy (it is no longer moving, but has reached a great height). As the bullet begins to fall, this potential energy is again transformed to kinetic energy by the force of gravity acting on it, and the bullet again loses energy when it heats the atmosphere and itself during this fall, *energy loss 4*. When the bullet strikes the ground, it becomes deformed, *energy loss 5*, sets some of the ground into motion, *energy loss 6*, heats itself, *energy loss 7,* and the earth it impacted, *energy loss 8*, and causes vibrations in the air around the impact area (sound, *energy loss 9*). At this time all of the energy that was stored as chemical energy in the powder has been changed to other forms of energy. The energy of the bullet when it impacted the earth was less than the chemical energy of the powder.

***We learn that with every transformation in energy there is always an associated energy loss, and that, simply speaking, we never get more out of something than we put into it**.

26.3 Meteorites are small cold bodies moving about in space. Why do they become luminous when they enter the earth's atmosphere?

The surface molecules of the meteorite begin striking atmosphere molecules; this action increases the total molecular activity of the meteorite surface molecules, which become so active (hot) that they begin to glow, some of them breaking away from the surface of the meteorite body. The molecules that break away from the meteorite body impact with air molecules, and their velocity becomes less than that of the meteorite body; they form a glowing “trail” or “tail” behind the meteorite, which we can see from the surface of the earth.

26.4 The Niagara falls are 160 feet (49 meters) high. How much warmer is the water at the bottom than at the top of the falls?

***One cm³ of water weighs one gram**.

If all of the kinetic energy were changed to heat upon impact at the bottom of the falls, each falling cm³ of water would acquire an energy of 1gm x 49 meters = 49 gram-meters.

***One gram-meter of work is equal to one calorie**

$\frac{49gm.m}{1} \times \frac{1calorie}{gm.m} = 0.117calories.$ Each cm³ of falling water absorbs 0.117 calories of heat (increased molecular activity) at the bottom of the falls. One calorie raises the temperature of one cm³ of water one degree centigrade, so the temperature of each cm³ of water at the bottom of the falls is raised 0.117 °C.

26.5 How many BTU of heat are required to warm 10lb of water from freezing to boiling?

***One BTU raises the temperature of 1lb of water 1 degree Fahrenheit.**

***Water boils at 212 °F and freezes at 32 °F, a temperature difference of 180 °F.**

The temperature difference between boiling and freezing water is 180 °F, so it requires 180 BTU to raise the temperature of one pound of water 180 °F. Raising ten pounds of water 180 °C requires ten times as much heat, or 1,800 BTU. Mathematically:

$$\frac{10lb_{water}}{1} \times \frac{1BTU}{\frac{1lb_{water}}{1°F}} \times \frac{180°F}{1} \Rightarrow \frac{10lb_{water}}{1} \times \frac{1BTU}{\frac{1lb_{water}}{1°F}} \times \frac{1}{\frac{°F}{1}} \times \frac{180°F}{1} \Rightarrow \frac{10lb_{water}}{1} \times \frac{1BTU}{\frac{1lb_{water}°F}{°F}} \times \frac{180°F}{1} \Rightarrow$$

$$\frac{10lb_{water}}{1} \times \frac{1BTU}{\frac{1lb_{water}°F}{1}} \times \frac{180°F}{1} \Rightarrow \frac{10lb_{water}}{1} \times \frac{1BTU}{1lb_{water}°F} \times \frac{180°F}{1} \Rightarrow 1{,}800BTU\ .$$

Notice that we multiplied the fraction $\frac{1BTU}{\frac{1lb_{water}}{1°F}}$ by 1 in the form of $\frac{1}{\frac{°F}{1}}$ to change this fraction to $\frac{1BTU}{1lb_{water}°F}$, which did not change its value, but did change its form.

26.6 Two and a half gallons of water (20lb) were warmed from 68 °F to 212 °F (a temperature difference of 144 °F). If the heat energy put into the water could all have been made to do useful work, how high could 10 tons of coal have been raised?

$$\frac{20lb_{water}}{1} \times \frac{1BTU}{\frac{1lb_{water}}{°F}} \times \frac{144°F}{1} \Rightarrow \frac{20lb_{water}}{1} \times \frac{1BTU}{1lb_{water}°F} \times \frac{144°F}{1} = 2880BTU\ .$$

2,880 BTU of heat were required to heat the water to its boiling point.

*** One BTU is equal to 778 ft-lb of work**.

$\frac{2880BTU}{1} \times \frac{778\,ftlb}{1BTU} = 2{,}240{,}640\,ftlb$ of work done by the heat.

***10 tons is equal to 20,000lb (1ton = 2000lb).**

$$Xft \times 20{,}000lb = 2{,}240{,}640\,ftlb \Rightarrow Xft = \frac{2{,}240{,}640\,ftlb}{20{,}000lb} = 112\,ft.$$

The heat energy could lift ten tons of coal 112 feet high.

27. SPECIFIC HEAT

The number of calories of heat required to change the temperature of one gram of a substance one degree centigrade is known as the specific heat of that substance.

$$\frac{calories}{\frac{gm}{°C}} = \frac{calories}{gm \cdot °C}.$$

The specific heat of water is 1.
1 BTU (British Thermal Unit) will raise the temperature of one pound of water 1 degree Fahrenheit.

$$\frac{1BTU}{\frac{1pound_{water}}{1°F}} = \frac{1BTU}{1pound_{water} \cdot °F}.$$

1 BTU is equal to 252 calories.

1 BTU is equal to 778 ft-lb of work.

252calories are equal to 778 ft-lb of work (or energy).
1 calorie is equal to 427 gm-M of work (or energy).

27.1 A barrelful of tepid water when poured into a snowdrift melts much more snow than a cupful of boiling water. Which has the greater quantity of heat stored in it?

The barrel of water contains much more heat than the cup of boiling water.

27.2 Why is a liter of hot water a better foot warmer than an equal volume of any other substance?

*** The specific heat of water is 1. One gram of water at any temperature contains more heat than one gram of any other substance at that temperature.**

27.3 The specific heat of water is much greater than that of any other liquid or of any solid. Explain how this accounts for the fact that an island in mid-ocean undergoes less extremes of temperature than an inland region.

The water around the island contains great quantities of heat. The temperature of the water can not be appreciably changed by the effects of adverse weather conditions.

27.4 How many calories are required to heat a laundry iron weighing 3 kilograms from 20 °C to 130 °C?

The specific heat of iron is 0.113 calories for each gram for each degree centigrade temperature change. The weight of the iron is 3000grams. The temperature change is 110 °C.

$$\frac{0.113 calories}{gm_{iron} \cdot °C} \times 3000 gm_{iron} \times 110°C = \frac{0.113 \times 3000 \times 110}{1} \times \frac{gm_{iron}}{gm_{iron}} \times \frac{°C}{°C} \times \frac{calories}{1} = 37{,}290 calories$$

.

27.5 How many BTU are required to warm a 6 pound laundry iron from 75 °F to 250 °F?

To warm 6 pounds of water from 75 °F to 250 °F:

$$\frac{1BTU}{1pound_{water} \cdot °F} \times 6 pounds_{water} \times 175°F = \frac{1 \times 6 \times 175}{1} \times \frac{pounds_{water}}{pounds_{water}} \times \frac{°F}{°F} \times \frac{BTU}{1} = 1050BTU.$$

The specific heat of water is 1.

The specific heat of iron is 0.113.

It requires only 0.113 times as much heat to raise the temperature of a weight of iron from one temperature to another as the amount of heat required to raise an equal weight of water the same temperature difference.

$1050BTU \times 0.113 = 118.65BTU$. It requires 118.65BTU to raise the 6 pounds of iron from 75 °F to 250 °F.

27.6 If 100 grams of mercury at 95 °C are mixed with 100 grams of water at 15 °C, and if the resulting temperature is 17.6 °C, what is the specific heat of mercury?

The temperature difference of the 100 grams of water was 2.6 °C.

$$\frac{1calory}{1gm_{water} \cdot °C} \times \frac{100 gm_{water}}{1} \times \frac{2.6°C}{1} = 2{,}600 calories .$$

The water gained 2,600 calories that were lost by the mercury. The temperature difference of the 100 grams of mercury was 77.4 degrees.

$$\frac{Xcalory}{1gm_{Hg} \cdot °C} \times \frac{100 gm_{Hg}}{1} \times \frac{77.4°C}{1} = 2{,}600 calories \Rightarrow \frac{Xcalory}{1gm_{Hg} \cdot °C} = \frac{2{,}600 calories}{100 gm_{Hg} \times 77.4°C} = \frac{0.336 calory}{1gm_{Hg} \cdot °C}$$

The specific heat of the mercury is 0.336.

27.7 If 200 grams of water at 80 °C are mixed with 100 grams of water at 10 °C what will be the temperature of the mixture?

The 200 grams of warmer water will cool (will lose heat) to the final temperature of the mixture.

The 100 grams of cooler water will warm (will gain heat) to the final temperature of the mixture.

If we call the final temperature T_{final} , then the temperature difference of the 200 grams of water that is at 80 °C is (80 - T_{final}) °C.

$$CaloriesLostBy200GramsWaterAt80°C = \frac{1calory}{1gm_{water} \cdot °C} \times \frac{200 gm_{water80°C}}{1} \times \frac{(80 - T_{final})°C}{1} .$$

The temperature difference of the 100 grams of water that is at 10 °C is, then, (T_{final} - 10) °C.

$$CaloriesGainedBy100GramsWaterAt10°C = \frac{1calory}{1gm_{water} \cdot °C} \times \frac{100gm_{water10°C}}{1} \times \frac{(T_{final} - 10)°C}{1}.$$

The heat lost by the 200 grams of water is equal to the heat gained by the 100 grams of water.

$$CaloriesLostBy200GramsWaterAt80°C = CaloriesGainedBy100GramsWaterAt10°C.$$

$$\frac{1calory}{1gm_{water} \cdot °C} \times \frac{200gm_{water}}{1} \times \frac{(80 - T_{final})°C}{1} = \frac{1calory}{1gm_{water} \cdot °C} \times \frac{100gm_{water}}{1} \times \frac{(T_{final} - 10)°C}{1}.$$

$$\frac{200gm_{water}}{1} \times \frac{(80 - T_{final})°C}{1} = \frac{100gm_{water}}{1} \times \frac{(T_{final} - 10)°C}{1}$$

$$200gm \times (80 - T_{final})°C = 100gm \times (T_{final} - 10)°C \Rightarrow$$

$$16000gm°C - 200T_{final}gm°C = 100T_{final}gm°C - 1000T_{final}gm°C \Rightarrow$$

$$17000gm°C = 300T_{final}gm°C \Rightarrow T_{final}°C = \frac{17000gm°C}{300gm} \Rightarrow T_{final}°C = 56\frac{2}{3}°C.$$

The final temperature of the mixture is 56 and 2/3 °C.

27.8 What temperature will result if 400 grams of aluminum at 100 °C are placed in 500 grams of water at 20 °C?

The heat lost by the aluminum is equal to the heat gained by the water.

$\frac{0.218calory}{1gm \cdot °C} \times \frac{400gm}{1} \times \frac{(100 - T_{final})°C}{1}$ = the heat lost by the aluminum.

$\frac{1calory}{1gm \cdot °C} \times \frac{500gm}{1} \times \frac{(T_{final} - 20)°C}{1}$ = the heat gained by the water.

$$\frac{0.218calory}{1gm \cdot °C} \times \frac{400gm}{1} \times \frac{(100 - T_{final})°C}{1} = \frac{1calory}{1gm \cdot °C} \times \frac{500gm}{1} \times \frac{(T_{final} - 20)°C}{1}.$$

$$\frac{1gm \cdot °C}{1calory} \times \frac{0.218calory}{1gm \cdot °C} \times \frac{400gm}{1} \times \frac{(100 - T_{final})°C}{1} = \frac{1gm \cdot °C}{1calory} \times \frac{1calory}{1gm \cdot °C} \times \frac{500gm}{1} \times \frac{(T_{final} - 20)°C}{1} \Rightarrow$$

$$0.218 \times \frac{400gm}{1} \times \frac{(100 - T_{final})°C}{1} = \frac{500gm}{1} \times \frac{(T_{final} - 20)°C}{1} \Rightarrow$$

$$87.2gm \times (100 - T_{final})°C = 500gm \times (T_{final} - 20)°C \Rightarrow$$

$$8720gm - 87.2T_{final}gm°C = 500T_{final}gm°C - 10000gm°C$$

$$18720gm°C = 587.2T_{final}gm°C \Rightarrow 18720gm°C \times \frac{1}{gm} = 587.2T_{final}gm°C \times \frac{1}{gm} \Rightarrow$$

$$18720°C = 587.2T_{final}°C \Rightarrow T_{final}°C = 31.8°C$$

The final temperature is 31.8 °C.

27.9 Eight pounds of water were placed in a copper kettle weighing 2.5 pounds. How many BTU are required to heat the water and the kettle from 70 °F to 212 °F?

For the water:

$$\frac{1BTU}{lb \cdot °F} \times \frac{8lb}{1} \times \frac{142°F}{1} = 1056BTU \ .$$

For the copper:

$$\frac{0.95BTU}{lb \cdot °F} \times \frac{2.5lb}{1} \times \frac{142°F}{1} = 33.7BTU \ .$$

The total heat required is 1056+33.7=1089.7BTU.

27.10 If a solid steel projectile were shot with a velocity of 1000 meters per second against an impenetrable steel target, and all the heat generated were to raise the temperature of the projectile, what would be the amount of the increase in temperature of the projectile?

We will consider a part of the projectile only, this part weighing one gram. Its kinetic energy is $\frac{mv^2}{2} = \frac{1gm \times (1000M)^2}{2} = 50{,}000gmM$.

***1 calorie is equal to 427gmM.**

If the kinetic energy of one gram of the projectile is all changed to heat, it would be converted into:

$$\frac{50{,}000gmM}{1} \times \frac{1calory}{427gmM} = \frac{50{,}000}{427} \times \frac{gmM}{gmM} \times \frac{calories}{1} = \frac{117}{1} \times 1 \times \frac{calories}{1} = 117calories.$$

These 117 calories would raise the temperature of one gram of steel:

$$\frac{117calories}{\frac{0.113calory}{\frac{1gm_{steel}}{1°C}}} \times 1gm_{steel} = \frac{117calories}{0.113calory} \times \frac{1°C}{1gm_{steel}} \times \frac{1gm_{steel}}{1} = 1036°C \ .$$

This is true for every gram or part of a gram of the projectile, so the entire projectile would be raised to a temperature 1036 °C higher than its beginning temperature.

28. FUSION

**The heat of fusion of a substance is the amount of heat for each gram of the substance that must be added or extracted to change it from a liquid to a solid or from a solid to a liquid at its freezing point.*

The heat of fusion of water is 80 calories per gram at 0 °C (32 °F).

The heat of fusion of mercury is 2.8 calories per gram at -39 °C.

252calories=778ft-lb=1BTU.

80calories=247ft-lb.

1calorie = 427 gmM.

28.1 What is the meaning of the statement:

“The heat of fusion of mercury is 2.8”?

For each gram of mercury at its melting temperature under normal conditions the (addition of / extraction of) 2.8 calories will cause the gram of mercury to (melt / freeze).

28.2 Explain how a block of ice placed in the top of a container can keep the contents of the container cool.

For each gram of ice that melts inside of the container, 80 calories of heat are removed from the inside of the container. The air around the ice is cooled and becomes denser (heavier) than the air below the ice block. The air flows to the bottom of the container forcing the warmer air in the container upward where the block of ice is.

This warmer air gives another 80 calories of heat up to the cooler ice block, which melts 1 gram of the ice.

This process continues until the ice has all been melted.

28.3 How many times as much heat (calories) is required to melt any piece of ice as to warm the resulting water 1 degree centigrade?

80 calories are required to melt each gram of ice. One degree more per gram will raise the temperature of the water 1 degree centigrade. Answer: 80 times as much.

How much heat will be required to raise the temperature one degree Fahrenheit?

One degree Fahrenheit is only 5/9 as large as 1 degree centigrade, so 5/9 of a calorie will raise one gram of water 1 degree Fahrenheit. The answer is 80 calories divided by 5/9 calorie.

$\frac{80calories}{\frac{5calorie}{9}} = \frac{80calories}{1} \times \frac{9}{5calorie} = \frac{720}{5} = 144$ It requires 144 times as much heat to melt a piece of ice as to raise the temperature of the melted water 1 degree Fahrenheit.

How many BTU are required to melt one pound of ice?

$\frac{1lb_{metric}}{1.1lb_{American}} \times \frac{1lb_{American}}{1} \cong 0.9lb_{metric}$. 0.9lb$_{metric}$ are $\frac{500gm}{1lb} \times \frac{0.9lb}{1} = 450gm$.

450 grams of ice are to be melted. Each gram requires 80 calories, so 28,000 calories are required to melt the ice.

There are 252 calories in 1 BTU. $\frac{1BTU}{252calories} \times \frac{28{,}000calories}{1} \cong 111BTU$.

How many foot pounds of energy are required to melt one pound of ice?

$\frac{111BTU}{1} \times \frac{778\,ftlb}{1BTU} = 86{,}358\,ftlb$.

28.4 If the heat of fusion of ice were to be only 40 instead of 80, how would this affect the amount of ice required to cool something?

Twice as much ice would be required to cool things.

28.5 Five pounds of ice melted in an ice chest in one hour. How many BTUs of heat went through the walls of the ice chest?

$\frac{111BTU}{1lb_{ice}} \times \frac{5lb_{ice}}{1} = 555BTU$.

28.6 What will happen if 1000 calories are applied to 20 grams of ice at zero °C?

$\frac{20gm_{ice}}{1} \times \frac{80calories}{1gm_{ice}} = 1600calories$.

1600 calories are required to melt the ice at zero °C. Only 1000 calories are available, so 1000/1600, or 5/8 of the ice will be melted, and the other 3/8 of the ice will remain solid. $\frac{5}{8} \times \frac{20gm_{ice}}{1} = 12.5gm_{ice}$. 12.5grams of ice will melt to become water at 0 °C, and the other 7.5 grams will remain as solid ice at 0 °C.

28.7 How many grams of ice must be put into 200 grams of water at 40 °C to lower the temperature to10 °C?

The 200 grams of water must be lowered in temperature 30 °C. The amount of heat to be extracted (taken out of) the water is:

$\frac{1calory}{1gm_{water} \cdot °C} \times \frac{200gm_{water}}{1} \times \frac{(\Delta T)°C}{1} = \frac{1calory}{1gm_{water} \cdot °C} \times \frac{200gm_{water}}{1} \times \frac{30°C}{1} = 6000calories$.

One gram of ice absorbs 80 calories when it is melted, mathematically $\frac{1gm_{ice}}{80calories}$.

Therefore, the amount of ice required to cause the 30 degree centigrade temperature drop in 200 grams of water is: $\frac{6000calories}{1} \times \frac{1gm_{ice}}{80calories} = 75gm_{ice}$.

75 grams of ice must be put into 200 grams of water at 40 °C to lower the temperature of the water to 10 °C.

28.8 How many grams of ice must be put into 500 grams of water at 50 °C to lower the temperature to 10 °C?

The 500 grams of water must be lowered in temperature 40 °C. The amount of heat to be extracted (taken out of) the water is:

$$\frac{1calory}{1gm_{water} \cdot °C} \times \frac{500gm_{water}}{1} \times \frac{(\Delta T)°C}{1} = \frac{1calory}{1gm_{water} \cdot °C} \times \frac{500gm_{water}}{1} \times \frac{40°C}{1} = 20{,}000calories.$$

$$\frac{20{,}000calories}{1} \times \frac{1gm_{ice}}{80calories} = 250gm_{ice}.$$

250 grams of ice must be put into 500 grams of water at 50 °C to lower the temperature of the water to 10 °C.

28.9 Why can snow be packed into a snowball if the snow is melting, but not if its temperature is much below zero °C?

Packing snow into a snowball means increasing the pressure on the snow. This means increasing the average molecular velocity of the ice crystals in the snow (heating the mass of the snow slightly). When this is done while the snow is melting, some of the ice crystals will melt under pressure to become water, but will freeze instantly again when the pressure is released. The ice that forms has interlocked ice crystals, like in an ice cube, that reform inside of the snowball, causing the snowball to have a stable form.

If very cold snow is packed into a snowball, the average molecular velocity of the ice crystals in the snow can not be raised enough to cause the snow to reach its melting point, so the process of becoming a liquid and then re-freezing again to interlock the ice crystals is no longer possible.

29. EVAPORATION

29.1 Explain the evaporation of naphthalene moth balls at ordinary room temperatures.

Naphthalene changes from a solid to a gas without becoming a liquid between these two states. We say that the naphthalene *sublimes*.

29.2 Why do clothes hung in the open to dry become dry faster on a windy day than on a still day?

The air in contact with the damp fabric of the clothes quickly has a large quantity of water vapor evaporated into it, which decreases the ability of more water to escape from the fabric into this damp air. When the wind blows this damp air out of the fabric, dryer air comes in contact with the fabric of the clothes, and water can evaporate more rapidly from the damp fabric into the dryer air.

29.3 If the inside of a barometer tube is wet when it is filled with mercury, will the height of the mercury be the same as in a dry tube?

See problem 5.2 if you do not know what a barometer is. Answer: No, it will be lower, because the moisture introduced to a vacuum will evaporate rapidly to produce a vapor pressure above the surface of the mercury inside of the tube, pushing it downward.

29.4 How many grams of water will evaporate at 20°C into a closed room 18 x 20 x 4 meters in size?

The volume of the room is:

$$V_{room} = 18 \times 20 \times 4m^3 = 1440m^3 \times \frac{10^6 cm^3}{1m^3} = 1440 \times 10^6 cm^3 .$$

***At 20°C, water has a vapor pressure of 17.4mm$_{Hg}$ and a density of 1.75 X 10^{-5} gm/cm³.**

The volume of the room in cm³ multiplied by the density of the water vapor in the room is equal to the amount of water in the room.

$$\frac{1440 \times 10^6 cm_{air}{}^3}{1} \times \frac{1.75 \times 10^{-5} gm_{water}}{1cm_{air}{}^3} = \frac{1.440cm_{air}{}^3}{1} \times \frac{1.75 \times 10^1 gm_{water}}{1cm_{air}{}^3} = 25.200gm_{water} .$$

The room contains 25.2 grams of water. This is the weight of 25.2 cubic centimeters of water at maximum that can evaporate into the air in this room.

29.5 When the temperature is 15°C, what will be the error in the barometric height indicated by a barometer which contains moisture?

***At 15°C, water has a vapor pressure of 12.7mm$_{Hg}$ and a density of 1.28 X 10^{-5} gm/cm³.**

12.7mm of mercury are equal to 1.27cm of mercury.

The barometric height of the mercury will therefore be 1.27cm lower than it should be. If the barometric pressure at the time is really 76cm of mercury, the column of mercury would only be 76-1.27 = 74.73 cm of mercury.

$\frac{74.73cm_{Hg}}{76cm_{Hg}} = 0.983$. The error is 0.017 = 17/1000 = 1.7/100 = 1.7%.

29.6 When the temperature is 20°C, how great was the error in reading due to the presence of water vapor in Otto von Guericke's barometer?

Otto von Guericke's barometer was a water barometer. He used water instead of mercury inside of the barometer tube. Since the density of mercury is 13.6 and the density of water is 1, Atmospheric pressure that will support a column of $76cm_{mercury}$ will support a column of water that is 13.6 x $76cm_{mercury}$, or $1033.6cm_{water}$, if no vapor pressure is present inside the tube. This is a water barometer, however, so there is always vapor pressure inside of the tube.

***At 20°C, water has a vapor pressure of $17.4mm_{Hg}$ and a density of 1.75×10^{-5} gm/cm³.**

$17.4mm_{Hg} = 1.74cm_{Hg}$. $\frac{1.74cm_{Hg}}{1} \times \frac{13.6cm_{water}}{1cm_{Hg}} = 23.66cm_{water}$. The water column will be 23.66cm lower than $1033.6cm_{water}$, or $1009.94cm_{water}$.

$\frac{1009.94cm_{water}}{1033.6cm_{water}} = 0.977$. The error is 0.023 = 23/1000 = 2.3/100 = 2.3%.

***At 35°C, water has a vapor pressure of $41.8mm_{Hg} = 4.81cm_{Hg} = 65.4cm_{water}$.**

The height of the water in the barometer is then only 968.2cm high.

$\frac{968.2cm_{water}}{1033.6cm_{water}} = 0.936$. The error is 0.063 = 63/1000 = 6.3/100 = 6.3%.

We see that between +20°C and +35°C the vapor pressure of water changes greatly for each 1°C temperature change.

The water barometer, then, can not show the changes in atmospheric pressure exactly, but only relatively. For this reason it becomes difficult to talk about an "error" when using a water barometer.

30. HYGROMETRY – MOISTURE CONDITIONS IN THE ATMOSPHERE

As the temperature of air increases, the amount of water that the air can hold becomes greater, and the water vapor pressure in the air becomes greater.

By experiment, tables have been made that show what the maximum vapor pressure of water in air at different temperatures is.

Part of one of these tables is shown below.

Dew Point in °C	Water vapor in mm_{Hg}	Density of Air in gm/cm^3
8	8.0	8.2×10^{-6}
10	9.1	9.3×10^{-6}
20	17.4	1.75×10^{-5}
30	31.5	3.0×10^{-5}

When the dew point is reached in a body of air, the air contains the maximum amount of water vapor that it can have at that temperature. We say that the air has a relative humidity of 100%.

30.1 Why do reading glasses become coated with moisture when entering a warm house from outside on a cold winter day?

The warm air in the house contains water vapor from breathing, cooking, washing, cleaning, etc. When this air comes in contact with the cold glass, it is cooled, and the momentum of its molecules can no longer hold as much water in suspension as it previously could. Water condenses on the surface of the glass and coats the glass as moisture. As the glass warms again, the moisture evaporates and returns to the air.

30.2 Does dew “fall”?

No. Dew condenses on grass because during the night the earth loses more heat by radiation into space than the air above it does. If the air contains water vapor, the air in contact with the cooler grass becomes cooler. The average momentum of the molecules of air becomes less, and they can no longer sustain as much moisture (extremely fine water droplets) within the air. This water condenses on the grass to form larger water droplets on the grass, which we notice as “dew”.

30.3 Why are icebergs frequently surrounded by fog?

When a massive iceberg cools still air directly in contact with it, as well as air around it, the water vapor in this air begins to condense on minute dust particles, which are always suspended in air, to form minute water droplets, each having a dust particle at its center.

The average molecular momentum of the air molecules continually striking these minute water droplets from all directions is large enough to overcome the continuous downward force of gravity acting on these minute water droplets, and they remain in

suspension in the cool air around the iceberg. We become aware of their presence as “fog”.

Until these minute water particles reach a weight whereby the average molecular momentum of the air molecules striking them from all directions can no longer overcome the continuous downward force of gravity acting on them, the fog remains around the iceberg.

If the minute water particles become larger, they fall from the air as precipitation back toward the earth, and the fog disappears.

30.4 Explain why condensed water will not usually collect on a pitcher of ice water in a warm room on a cold winter day.

Cold air holds less water vapor than warm air. The water vapor inside and outside of the house tries to equalize itself, meaning that some of the water vapor, being higher in the house than outside, will leave the air in the house rapidly when it is mixed with the cooler outside air (air leaks around the windows and doors, opening the outside doors when going or coming, opening windows to air a room, etc.).

A heated home in winter usually has a relative humidity (the amount of water vapor in the air) of 15% to 25%. The almost 0°C outside temperature surface of the ice pitcher in the house can usually not serve to condense enough water from the air in the house on its surface for water droplets to form that we can perceive as condensed water.

30.5 The dew point in a room was found to be 8°C. What would the relative humidity of the air in the room be at 10°C, at 20°C, at 30°C?

Dew Point in °C	Water vapor in mm_{Hg}	Density of Air in gm/cm³
8	8.0	8.2×10^{-6}
10	9.1	9.3×10^{-6}
20	17.4	1.75×10^{-5}
30	31.5	3.0×10^{-5}

When the dew point is reached in a body of air, that air contains the maximum amount of water vapor that it can hold at that temperature. We say that the air has a relative humidity of 100%.

At 8°C the water vapor is 8.0 mm_{Hg} when the air is at 100% relative humidity.

At 10°C the water vapor is 9.1 mm_{Hg} when the air is at 100% relative humidity.

At 20°C the water vapor is 17.4 mm_{Hg} when the air is at 100% relative humidity.

At 30°C the water vapor is 31.5 mm_{Hg} when the air is at 100% relative humidity.

If the air in a room is found to have its dew point at 8 °C, then the vapor pressure in this air is 8.0mm_{Hg}.

If this air is raised in temperature to 10 °C, its maximum water vapor pressure could be 9.1mm_{Hg}. It only has a water vapor pressure of 8.0mm_{Hg}, however, or 8.0/9.1=0.879 or 87.9% of the amount of water that it *could* hold. We say that its relative humidity has now changed to 87.9%.

If this air is raised in temperature to 20 °C, its maximum water vapor pressure could be 17.4mm_{Hg}. It only has a water vapor pressure of 8.0mm_{Hg}, however, or 8.0/17.4=0.459 or 45.9% of the amount of water that it *could* hold. We say that its relative humidity has now changed to 45.9%.

If this air is raised in temperature to 30 °C, its maximum water vapor pressure could be 31.5mm_{Hg}. It only has a water vapor pressure of 8.0mm_{Hg}, however, or 8.0/31.5=0.253 or 25.3% of the amount of water that it *could* hold. We say that its relative humidity has now changed to 25.3%.

30.6 What weight of water is contained in a room 5 x 5 x 3 meters if the relative humidity is 60% and the temperature is 20°C?

At 100% relative humidity and 20°C the vapor pressure of the water in the air is 17.4mm_{Hg} and its density is 1.75×10^{-5} gm/cm³.

At 60% relative humidity and 20°C the vapor pressure of the water in the air is 17.4mm_{Hg} x 0.6 = 10.44mm_{Hg}.

Its density is 1.75×10^{-5} gm/cm³ x 0.6 = 1.05 x 10^{-5} gm/cm³.

The volume of the room is $5M \times 5M \times 3M = 75M^3 \times \frac{10^6 cm^3}{1M^3} = 75 \times 10^6 cm^3$.

The weight of the water in the room is the volume of the room x the density of the water in the room.

$$\frac{75 \times 10^6 cm^3}{1} \times \frac{1.05 \times 10^{-5} gm}{1cm^3} = 78.75 \times 10^1 gm = 78.75 \times 10 gm = 787.5 gm .$$

30.7 If a glass beaker and a porous earthenware vessel are filled with equal amounts of water at the same temperature, in the course of a few minutes a noticeable difference of temperature will exist between the two vessels. Which will be the cooler, and why?

The porous material, because it offers a great surface area from which the water can evaporate, cools the earthenware vessel and the water remaining in it much faster than the water evaporating from the smaller surface area in the glass beaker can.

Will the difference in temperature between the two vessels be greater in a dry or in a moist atmosphere?

The difference in temperature between the two vessels will be greater in a dry atmosphere because the water vapor pressure in this air is less, which increases the rate of evaporation of the water from the great surface of the porous material even faster, and lowering the temperature of the vessel it is in accordingly.

30.8 Why will an open, narrow-necked bottle containing ether not show as low a temperature as an open shallow dish containing an equal amount of ether?

The much greater ether-to-air surface of contact in the dish allows a much higher evaporation rate to occur there than the smaller surface in the bottle does. The faster moving ether molecules in the liquid ether leave the dish at a faster rate than they can in the bottle, leaving more of the slower moving molecules in the liquid in the dish behind than can occur in the bottle within the same amount of time. The dish cools faster than the bottle because of the more rapid decrease in the average kinetic

energy of its molecules, and continues to do so until all of the ether in the dish has evaporated.

30.9 Why is the heat so oppressive on a very damp day in summer?

When the air is warm and the relative humidity is almost 100%, the air can only accept a very little moisture before the relative humidity of the air is 100%. At 100% relative humidity, when the air can accept no more water; we say that the air is saturated.

Our body cools itself by placing small droplets of water, through the pores in our skin, on the surface of our skin. These water droplets, which we call perspiration, are then exposed to the air where they can evaporate. For every $1cm^3$ of perspiration that evaporates, 80 calories of heat are removed from our body. Evaporation of water from the surface of our skin is what cools our body.

When the air around our body is nearly saturated, our body can not be cooled sufficiently by evaporation, and it begins to overheat. This is what makes the heat seem so oppressive on a very damp day in summer. We can jump into cooler water to cool our bodies again, or go into a room that is cooled by an air conditioner.

Automobiles in land areas that have warm damp air often in summer are air conditioned for this reason. A driver that is experiencing overheating in his body becomes weary, and his reaction times become longer, creating a hazardous condition for himself and others. The warm moist air in the car is circulated over a cold heat exchanger where the water in the air condenses and leaves the air on the surfaces of the heat exchanger, called an evaporator. Now, cool dry air contacts the perspiration on the driver's skin where the perspiration can evaporate and cool his body. The driver becomes awake and aware again, and his reaction times become shorter.

30.10 A morning fog generally disappears before noon. Explain the reason for its disappearance.

The fog exists because it consists of tiny water droplets that condensed on extremely fine dust particles in the air from water vapor in the air earlier, when the air cooled from a warmer temperature to its cooler, current temperature.

As the temperature of the air is increased by energy from the sun striking its molecules (the air is heated) during the morning, the average molecular kinetic energy of its molecules increases; these molecules bombard the water droplets in the air with more kinetic energy, and the water is again evaporated back into the air as water vapor.

Water vapor in the air is invisible, but condensed water droplets in the air can be seen.

As the water droplets in the air change back into water vapor, the fog "disappears".

30.11 What becomes of the cloud which can be seen when a steam whistle is operated? Is it steam?

The gas that comes out of the whistle is almost pure hot water vapor, which can not be seen. Some of it is absorbed by the atmosphere immediately and can still not be seen, but some of it is cooled to the dew point and condenses on tiny dust particles

in the air in the immediate vicinity of the whistle. This is the “cloud” we see. This cloud, however, is in air that has a much lower vapor pressure than the air around the whistle. This causes the water droplets in the outside air to evaporate rapidly back to water vapor, and we see the “cloud” disappear.

30.12 Explain why it is necessary in winter to add moisture to the air in our houses to maintain proper relative humidity, but not necessarily in summer?

The winter air, generally speaking, is cool and dry. We heat this air in our homes, but that does not increase the amount of water in it. The average relative humidity in heated homes in winter is about 30%. The perspiration on our skin when we are in the home during winter therefore evaporates very rapidly, and cools us even more. Adding water to our household air raises its relative humidity, which decreases the rate at which our perspiration evaporates which results in a warmer, more comfortable skin temperature.

30.13 What factors effecting evaporation are illustrated by the following? A) A wet handkerchief dries faster if it is spread out. B) Clothes dry best on a windy day. C) Clothes do not dry quickly on a cold day. D) Clothes dry slowly on humid days.

The following six factors effect the rate of evaporation:

1	The nature of the evaporating liquid.
2	The temperature of the evaporating liquid.
3.	The space into which evaporation takes place.
4.	The density of the air or other gas above the evaporating surface.
5.	The rapidity of the circulation of the air above the evaporating surface.
6.	The extent of the exposed surface of the liquid to the air.

A) 6

B) 5

C) 2

D) 3 and 4.

31. BOILING

31.1 A fall of 1°C in the boiling point of water is caused by rising 960 feet. How hot is boiling water at Denver, Colorado, 5000 ft above sea level?

*** There is a 1°C drop in the boiling point temperature of water for each 960 feet of increase in altitude.**

*** At sea level, water boils at 100°C.**

$\frac{5000\,ft}{1} \times \frac{1°C}{960\,ft} = \frac{5000°C}{960} = 5.2°C$. There is a 5.2°C drop in the boiling point of water at an altitude of 5000ft.

The boiling point of water at an altitude of 5000 ft is (100°C – 5.2°C) = 94.8°C.

31.2 How can we obtain pure drinking water from sea water?

Method1. Pump a thin layer of sea water onto a large, flat waterproof area (several football fields large) prepared next to the sea. Cover this area with a canopy of plastic foil that the sunlight can enter to heat the sea water underneath it. The thin layer of salt water evaporates under the canopy when it is heated by the sun. Make an opening at one end of the canopy and place a fan before it to blow air through the inside of the canopy. Place an exit tube at the other end through which the evaporated water vapor can leave the canopy. The fan pushes the water vapor through this tube to a series of smaller tubes in the shade where the water vapor condenses in these tubes. At the lower end of the condensation tubes the condensed drinking water can be collected.

Method 2. In principle: Boil the water and cool this vapor which condenses to drinking water.

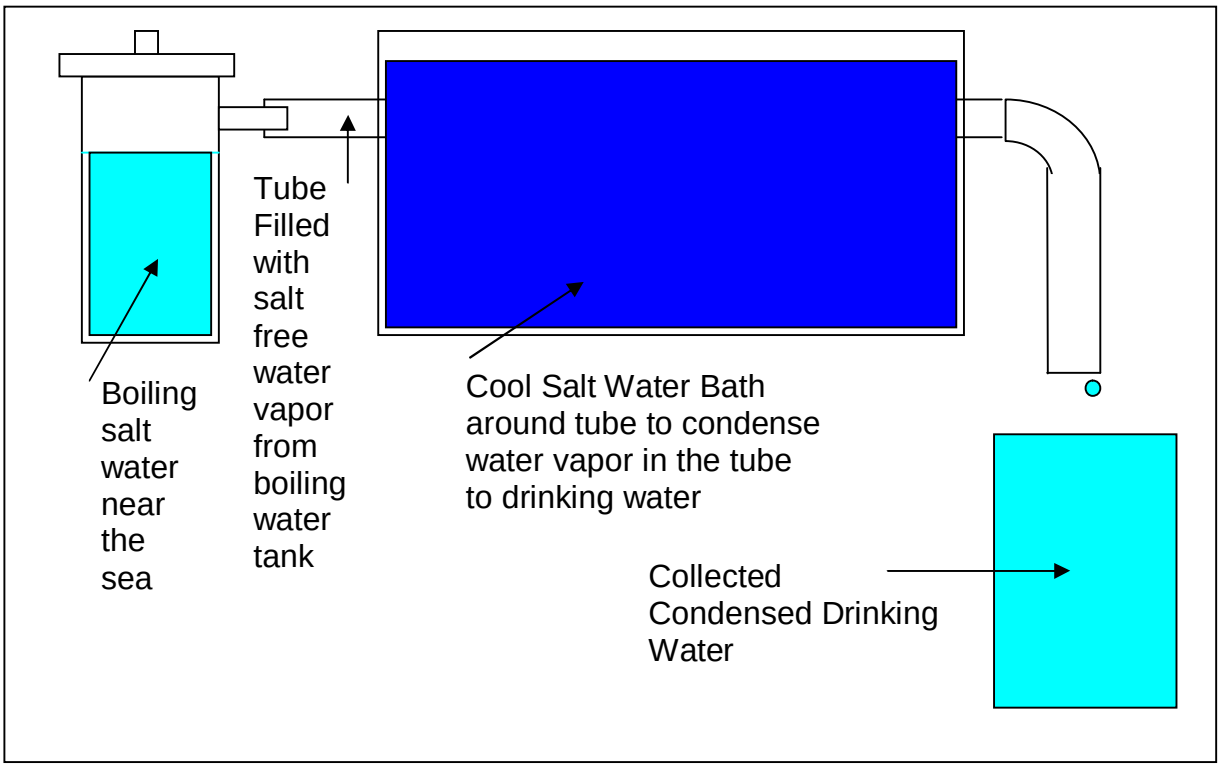

31.3 When water has been brought to a boil, will eggs in it become harder faster if the heat under the water is increased?

No. Increasing the intensity of the heat will not increase the temperature of the boiling water; it will only increase the rate at which the boiling water is changed to water vapor.

31.4 The hot water that leaves a steam radiator can be as hot as the steam that entered the radiator. How, then, has the room been warmed?

*** 536 calories per gram must be added to boiling water to change it to steam.**

***536 calories per gram must be removed from steam to change it to boiling water**.

The steam that enters the radiator loses heat energy to the inside wall of the radiator. This heat is conducted through the material of the radiator to the outer surface of the radiator, which heats the air it is in contact with (heats the room). Every gram of steam that loses 586 calories of heat while going through the radiator will be changed to hot liquid water at the same temperature in the radiator. The heat that heats the room is the loss of heat from the steam that caused it to change to water at its same temperature.

31.5 In a vessel of water which is being heated, fine bubbles rise to the surface of the water long before the water begins to boil. Why is this so?

Atmospheric pressure is always above the water, so air is dissolved in the water. As the water is heated, the air dissolved in the water is also heated. This air becomes less dense because of being heated and forms air bubbles, which begin to *displace more water* than they did before. According to the principle of Archimedes, this causes a higher lifting force to develop on their lower surfaces, and these air bubbles begin to rise before the water has reached 100°C.

31.6 When water is boiled in a deep vessel, the rising air bubbles increase rapidly in size as they approach the surface. Give two reasons for this.

The hydrostatic pressure (the pressure on the bubbles caused by the water) around the bubbles decreases as they rise, allowing them to expand further as they rise.

The density of the water is highest at the bottom of the vessel where the cooler water is, and decreases with rising temperature toward the top of the vessel. This also decreases the hydrostatic pressure on the air bubbles, allowing them to expand even more rapidly.

31.7 Why are burns caused by steam so much more severe than burns caused by hot water of the same temperature?

*** 536 calories per gram must be added to boiling water to change it to steam.**

***536 calories per gram must be removed from steam to change it to boiling water.**

Steam at 100°C has the same temperature as water. Unlike water, however, steam contains much more heat than water at 100°C. Steam will release 536 calories for each gram in changing back to water at 100°C, and gives some of this extra heat

energy to the skin it contacts. The steam can transfer much more heat to the skin than water can, although both are at the same temperature, for this reason.

31.8 How many times as much heat is required to convert any body of boiling water into steam as to warm an equal weight of water 1°C?

*** 536 calories per gram must be added to boiling water to change it to steam at 100°C.**

***1 calorie per gram must be added to water to change its temperature 1°C.**

$$\frac{\frac{536calories}{gm_{WaterToSteam}}}{\frac{1calorie}{1gm_{Water/°C}}} \Rightarrow \frac{536}{1} = 536TimesAsMuch.$$

31.9 How many BTU are liberated in a radiator when 10lb of steam condense there?

The number of grams in 10 American pounds is:

$$\frac{10lb_{American}}{1} \times \frac{1lb_{metric}}{1.1lb_{American}} \times \frac{500gm}{1lb_{metric}} = \frac{5000gm}{1.1} = 4545gm_{steam}.$$

The amount of heat liberated when the 10lb of steam condense to water is:

$$\frac{4545gm_{steam}}{1} \times \frac{536calories}{1gm_{SteamToWater}} = 2{,}436.363ccalories.$$

The number of BTUs equal to this heat is:

$$\frac{2{,}436{,}363calories}{1} \times \frac{1BTU}{252calories} \cong 9{,}668BTU.$$

31.10 In a certain radiator 2kg of steam at 100°C condensed to water in one hour and the water left the radiator at 90°C. How many calories heated the room the radiator was in during the hour?

The heat lost by the steam to condense it to water was:

$$\frac{2000gm_{steam}}{1} \times \frac{536calories}{1gm_{SteamToWater}} = 1{,}702{,}000calories.$$

The heat lost to the radiator in reducing the temperature of 2kg of water 10°C was:

$$\frac{2000gm_{water}}{1} \times \frac{1calorie}{1gm_{water/°C}} = 2000calories.$$

The total heat transferred to the body of the radiator was also transferred to the heat in the room, because the water left the radiator at 90°C.

$$HeatGivenToRoom = 1{,}702{,}000 + 2000calories = 1{,}704{,}000calories.$$

31.11 How many calories are given up by 30gm of steam at 100°C in condensing and then cooling to 20°C?

The heat lost by the steam to condense it to water was:

$$\frac{30gm_{steam}}{1} \times \frac{536calories}{1gm_{SteamToWater}} = 16{,}080calories\ .$$

The heat lost to the radiator in reducing the temperature of 30gm of water 20°C was:

$$\frac{30gm_{water}}{1} \times \frac{1calorie}{1gm_{water/°C}} \times \frac{(100-20)°C}{1} = \frac{30gm_{water}}{1} \times \frac{1calorie}{1gm_{water/°C}} \times \frac{80°C}{1} = 2400calories\ .$$

The total heat lost by the steam was 16,080 calories + 2400 calories, or 18,480calories.

$$\Delta H_{steam} = 16080 + 2400calories = 18{,}480calories\ .$$

32. ARTIFICIAL COOLING

The freezing of a liquid is caused by reducing the average velocity of the molecules in the liquid (cooling the liquid) to the point that the attracting forces between its molecules are stronger than the forces of its motion causing the molecules to be repelled (to remain apart). When this temperature is reached (the freezing point of the liquid) the molecules collect together in a solid mass and are frozen.

If foreign molecules (molecules of another substance) are added to a liquid that *attract* the molecules of the liquid, the liquid molecules can no longer collect together to form a solid mass at the freezing point of the liquid like they did before. The extra *attraction* caused by the foreign molecules added to the liquid *prevents* the liquid molecules from drawing together to form a solid mass, and the entire solution must be cooled further to reduce this effect before freezing can occur. Freezing occurs at a temperature that is *lower* than the normal freezing point of the liquid; *the freezing point of the liquid has been lowered.*

If foreign molecules (molecules of another substance) are added to a liquid that *greatly attract* the molecules of the liquid, the liquid molecules will increase in average molecular velocity; the temperature of the solution increases.

32.1 When salt water freezes, the ice formed is free from salt. What effect, then, does freezing have on the concentration of a salt solution?

While some of the water in the solution is removed by freezing, the same amount of salt remains in the solution with the rest of the water that did not freeze, *increasing the salt concentration* in the solution.

32.2 A partially concentrated salt solution which has a freezing point of -5°C is placed in a room which is kept at -10°C. Will it freeze?

No, not completely. As the water begins to freeze out of the solution, the salt concentration of the solution increases, which lowers the freezing point of the solution.

When the concentration is so large that the maximum amount of normal table salt (sodium chloride, NaCl) is dissolved the water that can be, the freezing point of the solution is minus 22°C.

The -10°C room can not freeze this solution.

32.3 Explain why salt is thrown on icy sidewalks on cold winter days.

The salt and snow mix to form a salt solution (also called brine). The freezing point of the brine is below the freezing point of water. As the brine forms, the ice “melts”.

***One part of NaCl in two parts of ice will form brine that freezes at -22°C.**

***Three parts of calcium chloride in two parts of snow will form brine that freezes at minus 55°C. This temperature is more than sufficient to freeze mercury (-39°C).**

32.4 Give two reasons why the oceans freeze less easily than the lakes.

Salt water has a lower freezing point than fresh water.

Only part of the surface of the oceans close to polar regions are cooled enough to freeze. The volume of the oceans is so vast that even if they contained no salt, their entire volume except the surface water must be cooled to 4°C before they could begin to freeze. The oceans absorb too much natural heat from volcanic activity on the ocean floor and from the sun for this to occur.

32.5 Why does A) pouring H_2SO_4 into water produce heat, while B) pouring H_2SO_4 over ice produce cold?

When H_2SO_4 is added to water, the water molecules are attracted very strongly toward the dissolving H_2SO_4, which forms H_2^{+2} and $SO4^{-2}$ ions in the water. The average molecular velocity of the water molecules is raised greatly by this activity, and the solution is heated.

When H_2SO_4 molecules are added to ice, they remove water molecules from a crystalline structure, the ice. The water molecules are strongly bound in the ice crystals, and the H_2SO_4 loses much kinetic energy in removing the water molecules from their ice crystals. For every gram of water that is changed from ice to water, the H_2SO_4 molecules lose 80 calories of kinetic energy. The water has a temperature of 0°C when it melts, but mixes with the very cold H_2SO_4 molecules to form a cold mixture having a freezing point below 0°C., and this mixture remains liquid.

32.6 Why will a liquid that is unable to dissolve a solid at a low temperature often do so at a higher temperature?

At a low temperature the kinetic energy of the liquid molecules is not enough to remove one of the solid molecules from its position in the solid body when the two molecules collide with another.

At a higher temperature, the higher kinetic energy of the surface molecules of the solid makes them less strongly attracted to the solid body of which they are a part, and the liquid molecules strike the surface molecules of the solid much harder than before, being able to remove them far enough from the solid body that they remain in solution. The solid begins to dissolve in the liquid.

32.7 When the salt in an ice cream freezer unites with the ice to form brine, about how many calories of heat are used for each gram of ice melted?

To change one gram of ice to one gram of water at 0°C, 80 calories must be given to each gram of ice. This ice is now water, but its temperature is still 0°C.

Where does this heat come from?

The heat comes from the mixture of water and salt, from the brine. The salt mixes with the liquid water at 0°C to lower the freezing point of the brine to below 0°C. More heat is taken from this brine to melt more ice at 0°C, and the temperature of the brine becomes lower.

If the freezing point of the brine were to be the same as the freezing point of the cream, would the cream freeze?

No, the cream would not freeze, even though it is at its freezing point. Extra heat must be removed from the cream now to change its state from a liquid to a solid at the same temperature, its Heat of Fusion. This heat can only be removed by the brine, so the brine must be below the freezing temperature of the cream before the cream will freeze.

33. INDUSTRIAL APPLICATIONS

Gasoline has 18,000 BTU per pound

1BTU=778 ft-lb

1HP=550 ft-lb

1HP=745.7 watts

Power/Velocity= Force

1Kilowatt =101.98 Kg-m/s

33.1 Why is a gas engine called an internal-combustion engine?

Combustion (burning of the fuel) occurs under pressure inside of (internal) the engine. It is an internal combustion engine.

33.2 Why do gasoline engines have flywheels?

Power is delivered to the crankshaft as a series of powerful explosions, which would cause the engine to hammer and vibrate violently. The flywheel is used to transfer this energy into rotational energy, transforming the pounding power coming from the pistons into smooth rotational energy stored in the flywheel.

33.3 How does the temperature of the steam within a locomotive boiler compare with its temperature at the moment of exhaust?

The temperature in the boiler is greater than the temperature at the exhaust. Explanation:

$PV = nRT$. The Volume becomes larger as the piston moves forward, causing the pressure in the driving cylinder to fall, so the temperature of the steam in this cylinder must also fall.

33.4 On the drive wheels of a steam locomotive there is a mass of iron opposite the point of attachment of the drive shaft. Why is this necessary?

This iron part is a counterweight to the arm driving the wheel. The wheel is balanced between the centrifugal force pushing the arm outward and the centrifugal force pushing the counterweight outward in the opposite direction. If the counterweight were not there, the wheel would “hop” on the track and could derail the train.

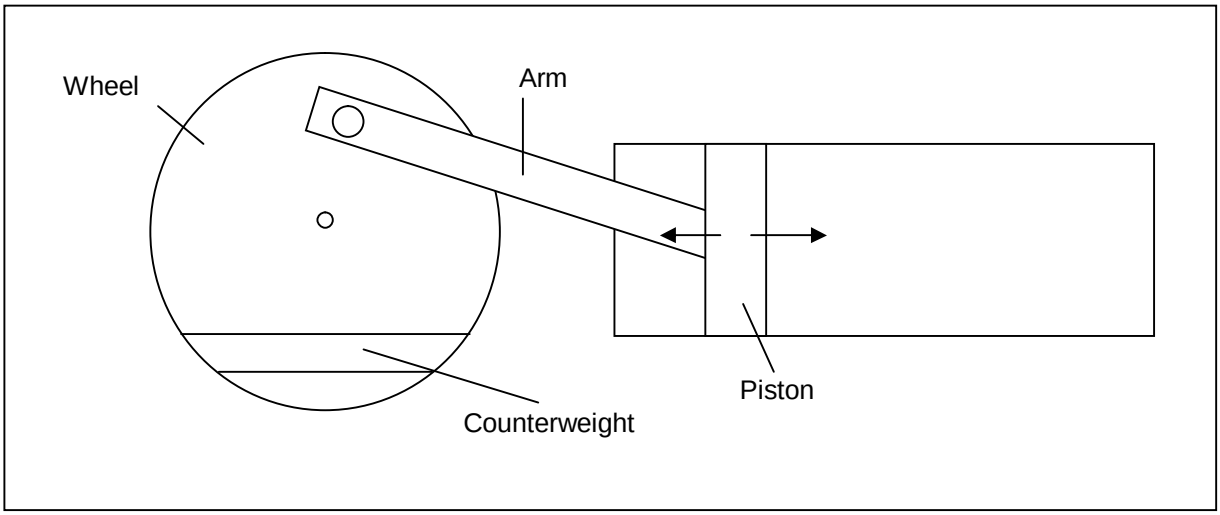

33.5 Why does the water in a closed water boiler not boil, although it is at 100°C?

As the water begins to boil, its vapor builds up pressure above the water in the boiler, which raises the boiling point of the water in the boiler. The pressure in the boiler increases with more heat being added to the water. Each time heat is added to the water in the boiler, a small amount of water boils, which again raises the pressure above the water and thereby the boiling point of the water and the water stops boiling.

When water vapor (steam) is removed from the water boiler by opening a valve, the pressure above the hot water becomes less, the boiling point of the water is lowered, and the water begins boiling violently producing more hot water vapor above the hot water in the boiler.

***The energy that causes this boiling is taken from the hot water itself.**

If no more heat is added to the water, the water will boil until it becomes cool enough that its temperature falls to the boiling point of water at the pressure it is under.

If heat is added to the water, the water continues boiling until all of the water in the boiler has been boiled, or until the hot water vapor is prevented from leaving the boiler by closing the valve again; closing the valve increases the pressure above the hot water and increases the boiling point of the hot water again, and the hot water stops boiling.

33.6 If liquid oxygen is placed in an open vessel, its temperature will not rise above minus 182°C. Why not?

An attempt to add heat to the liquid oxygen will cause it to boil more rapidly. The heat that is used for this boiling comes from the liquid oxygen itself, which immediately cools the liquid oxygen back to its boiling point, minus 182°C.

Suggest a way in which its temperature could be made to rise above minus 182°C.

Increasing the pressure on the liquid oxygen will increase its boiling point. The liquid oxygen can then be raised in temperature without causing it to boil under this higher pressure.

Suggest a way in which its temperature could be made to fall below minus 182°C.

Decreasing the pressure on the liquid oxygen (placing it under a partial vacuum) will decrease its boiling point. The liquid oxygen will begin to boil under this lower temperature, which removes heat from the liquid oxygen itself. This boiling will continue until the liquid oxygen reaches its new lowered boiling point, when it will stop boiling. The temperature of the liquid oxygen will now be below minus 182°C.

33.7 How many foot pounds of energy are in 1 pound of coal containing 14,000 BTU per pound?

$$\frac{14{,}000 BTU}{1} \times \frac{778\, ftlb}{1 BTU} = 10{,}892{,}000\, ftlb\,.$$

How much iron must be held at a height of 150 feet to have as much energy as this pound of coal?

$$\frac{10{,}892{,}000\, ftlb}{150\, ft} = \frac{72{,}613 lb}{1} \times \frac{1 ton}{2000 lb} = 36.3 tons\,.$$

33.8 The average steam locomotive has an efficiency of only 6%. What horsepower does it develop when it is consuming 1 ton of coal per hour?

$$\frac{1 ton_{coal}}{3600 s} \times \frac{2000 lb_{coal}}{1 ton_{coal}} \times \frac{1089200\, ftlb}{1 lb_{coal}} = \frac{2.1784 \times 10^{10}\, ftlb}{3600 s} = \frac{6051111 \frac{ftlb}{s}}{1} \times \frac{1 HP}{550 \frac{ftlb}{s}} = 11{,}000 HP$$

This is the horsepower developed at 100% efficiency. At 6% efficiency, the locomotive only produces 0.06 times 11,000HP, or 660 HP.

33.9 What amount of useful work did a gasoline engine working at an efficiency of 25% do in using 100lb of gasoline containing 18,000 BTU per pound?

$$\frac{18{,}000 BTU}{1 lb_{gasoline}} \times \frac{100 lb_{gasoline}}{1} = 18 \times 10^5\, BTU \times \frac{778\, ftlb}{1 BTU} = 14004 \times 10^5\, ftlb\,.$$

This is the useful work done by the engine at 100% efficiency. At 25% efficiency, the gasoline engine only produces 0.25 times 14,004 ft-lb or about 3.5 x 10^7 ft-lb of useful work.

33.10 What pull (force) does a 1000 horsepower locomotive exert when it is running at 25 miles per hour and exerting its full horsepower?

$\frac{1000 HP}{1} \times \frac{550 \frac{ftlb}{s}}{1 HP} = 550{,}000 \frac{ftlb}{s}$. The full power of the locomotive is 550,000ft-lb/s.

The velocity of the locomotive is $\frac{25 miles}{1 hour} \times \frac{1 hour}{3600 s} \times \frac{5280\, ft}{1 mile} = \frac{36\, ft}{s}$.

If we divide power by velocity, we get force.

$Force = \frac{Power}{Velocity} \Rightarrow lb = \frac{\frac{ftlb}{s}}{\frac{ft}{s}} \Rightarrow \frac{550{,}000\frac{ftlb}{s}}{36\frac{ft}{s}} = 15{,}278lb$. The locomotive is pulling with a force of 15,278lb.

34. CONDUCTION OF HEAT

34.1Why do firemen wear flannel shirts in summer to keep cool and in winter to keep warm?

In summer the flannel does not conduct heat well from outside the body to the body. The many tiny air pockets between the cotton fibers in the flannel make it a poor conductor of heat.

In winter the flannel does not conduct heat well from the body to outside of the body, insulating the body and helping to keep it warm.

34.2 If a package of ice cream is put inside a paper bag, it will not melt as fast as without the bag on a hot summer day. Explain why.

Paper is a poor conductor of heat, and the heat from the environment can not as easily reach the ice cream inside the bag. It takes more time for the ice cream to melt.

34.3If the ice in an ice chest is wrapped in a blanket, what is the effect on the ice?

The ice lasts longer in the blanket, because the blanket acts as an insulation to slow the conduction of heat through the air to the ice.

34.4 If a piece of paper is wrapped tightly around a metal rod and held for an instant in a flame, it will not be scorched. If it is wrapped around a wooden rod, it will be scorched immediately. Why.

The metal rod is a good conductor of heat that is in good contact with the paper. This transfers the heat rapidly away from the paper, and it does not scorch if the flame is held on the paper only a short time.

The wooden rod is a poor conductor of heat in good contact with the paper. The wood can not transfer the heat of the flame away from the paper, and it scorches immediately.

34.5 If one touches a pan containing a loaf of bread in a hot oven, he receives a much more severe burn than if he touches the bread itself, although the temperature is the same. Explain.

The metal pan is a much better conductor of heat than the bread. In the same amount of time, the metal will transfer much more heat to a cooler object than the bread can. The burn on the skin is therefore much more severe when touching good conductors of heat than when touching poor conductors of heat.

34.6 Why is it a good idea to cover plants on a night that frost is expected?

Covering the plants prevents much heat from leaving the plant to the cold air around it, because the further heat transfer away from the air near the plant to other air farther away from the plant is reduced by the covering around the plant. In the same amount of time less heat will leave the covered plant than an uncovered plant.

34.7 Why will a moistened finger or the tongue freeze instantly to a piece of iron on a cold winter day, but not to a piece of wood?

The iron, a good conductor of heat, transfers heat rapidly away from the moisture. This drops the temperature of the moisture below its freezing point, causing it to freeze. Wood, a poor conductor of heat, is not able to remove heat fast enough from the moisture to cause its temperature to fall below the freezing point of the moisture; the moisture does not freeze.

34.8 Does clothing ever afford us heat in winter?

No.

How, then, does it keep us warm?

Winter clothing is designed to be a poor conductor of heat, which prevents our own body heat from being conducted to the cold outside air rapidly. We stay warmer than would be the case without winter clothes.

34.9 Why is the outer pail of an ice cream freezer made of thick wood, and the inner can of thin metal?

The wood is a poor conductor of heat and prevents the outside summer heat from entering the salt water brine (made by filling different layers of crushed ice and salt in the space between the metal can and the wooden pail) to warm it. The brine remains at a low temperature below zero a longer amount of time.

The thin metal can is a good heat conductor in contact with the brine on one side and the ice cream mixture on the other side. Heat is transferred rapidly from the ice cream mixture to the brine, and the ice cream freezes.

35. VENTILATION, CONVECTION, RADIATION, AND HEATING

35.1 If we attempt to start a fire in a wood burning stove when the chimney is cold and damp, the stove “smokes”. Explain this.

The cold, damp air is warmed by the fire. This air becomes less dense. The surrounding air is denser, and forces the warm less dense air upward. This warm air is cooled by the cold air it is rising in; some of the water vapor in it condenses as the air is rising and cooling, which appears to be smoke.

35.2 Why is a hollow wall that has been filled with sawdust a better non-conductor of heat than the same wall filled with only air?

The air is compartmentalized into many tiny air pockets in the spaces between the particles of saw dust; this air can not move readily to contact other air. The saw dust prevents the loss of heat through the wall by convection (the moving of air and the heat contained in it). This reduces the rate at which heat is lost through the wall.

The wall having only air inside of it will lose much heat, because the air inside of it can move easily from the warmer to the cooler side of the wall; this heat is lost by convection.

35.3 In a hot water heating system why does the return pipe always connect at the bottom of the boiler, while the outside going pipe connects at the top?

Water is heated at the bottom of the boiler, becomes less dense than the water above it, and begins to rise in the boiler. When this happens, the cold water in the return pipe being more dense (heavier than the hot water), enters the bottom of the boiler.

The hot water leaves the top of the boiler and is cooled when it loses heat throughout the heating system, becoming denser (heavier than it was before when it was hot). The heavier water is led to the lowest position in the heating system were it eventually returns to the bottom of the boiler to be heated again. The water circulates by convection.

35.4 Which is thermally more efficient, a cooking stove or a grill?

A cooking stove is more efficient, because the heat losses by conduction and convection are greatly reduced by insulation. More heat can be radiated from the inside walls of an oven to the food.

An open grill loses much heat by convection. A closed grill is more efficient than an open one, but the heat lost by convection, heat conduction through its walls and cover, and radiation from its cover is still very great.

35.5 When a room is heated by a fireplace, which of the three methods of heat transfer plays the most important role?

The air is a poor conductor of heat into the room, because it is a gas. The hot air from the fire with combustion gasses leaves the room by convection, going up the chimney. Radiation is the method of heat transfer that mainly warms the room.

35.6 Why do you blow on your hands to warm them in winter, and fan yourself to cool-off in summer?

Air blown from our mouths contains moisture, and this moisture contains a great amount of heat that is transferred to the hands by conduction.

Fanning places air in motion near our perspired skin, where the moisture evaporates, and removes 80 calories of heat from our body for each gram of water that evaporates.

35.7 If you open a door between a warm and a cold room, in what direction will a candle flame be blown which is placed at the top of the door?

When the door is first opened, the cold air on the floor of the cold room begins to move across the floor of the warm room because it is the densest air in both rooms. The warm air in the warm room rises above this cold air because it is less dense than the cold air moving beneath it and pushing it upward. The upward moving warm air must now somehow exit the warm room, because the cold air has occupied some of the warm room's volume, which is fixed in size. The only place this warm air can leave the warm room is through the doorframe near the top of the door into the cold room.

In the cold room, the cold air falls toward the floor because the coldest air in the room has moved beneath it into the warm room.

At the top of the door the air moves from the warm room into the cold room. At the bottom of the door the cold air moves from the cold room into the warm room. The air circulates and mixes by convection until the temperature of the air is the same in both rooms.

If a candle is placed dear the top of the door, its flame will lean away from the warm room toward the cold room.

35.8 Why is "felt" a better conductor of heat when it is very firmly packed than when it is loosely packed?

When felt is firmly packed the solid felt fibers are in contact with another, which increases heat conduction between them. Additionally, the air lying between the fibers is expelled, causing the felt to lose the insulating properties of the air.

35.9 If 2 metric tons of coal are burned in your house per month, and if your furnace allows one-third of the heat to go up the chimney, how many calories remain to be used per day?

$$\frac{1month}{30days}\times\frac{2tons_{coal}}{1month}\times\frac{1000kg_{coal}}{1ton_{coal}}\times\frac{1000gm_{coal}}{1kg_{coal}}\times\frac{6000calories}{1gm_{coal}}=\frac{120\times10^{8}calories}{30days}=\frac{4\times10^{8}calories}{1day}$$

2/3 of these calories are used to heat the house each day.

$$\frac{4\times10^{8}calories}{1day}\times\frac{2}{3}=2\frac{2}{3}\times10^{8}\frac{calories}{day}.$$

36. MAGNETISM

The *force* which any two magnetic poles exert on each other in air is equal to the product of the pole strengths divided by the square of the distance between them.

A *unit pole* is defined as a magnetic pole which, when placed at a distance of 1 centimeter from an exactly similar pole in air repels it with a force of 1 dyne.

A force of 1 dyne will accelerate a mass of 1 gram 1cm/s^2.

***The force in dynes which any two magnetic poles exert on each other is the product of the pole strengths, divided by the square of the distance between them, measured in centimeters.**

The quality of resisting either magnetization or de-magnetization is called retentivity.

A substance which has the property of becoming strongly magnetic under the influence of a permanent magnet (whether it has a high retentivity or not) is said to possess permeability to a high degree.

Magnetic lines of force are always closed loops that leave the surface of one end of the magnet (the north end) at right angles to this surface, and enter the other end of the magnet (the south end) at right angles to its surface.

Iron and steel are the only materials that exhibit magnetic properties to any degree. Nickel and cobalt are also attracted to strong magnets. Some mixtures of metals and non-metals can produce strong magnets.

36.1 Make a diagram to show the general shape of the lines of force between unlike poles of bar magnets, and between like poles of bar magnets.

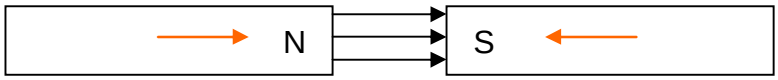

Unlike poles attract each other (pull each other together)

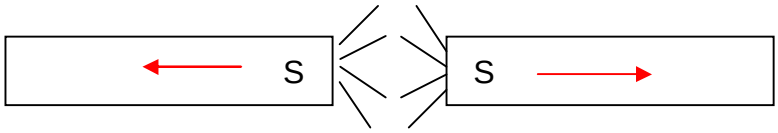

Like poles repel each other (push each other apart)

36.2 Devise an experiment which will show that a piece of iron attracts a magnet just as truly as the magnet attracts the iron.

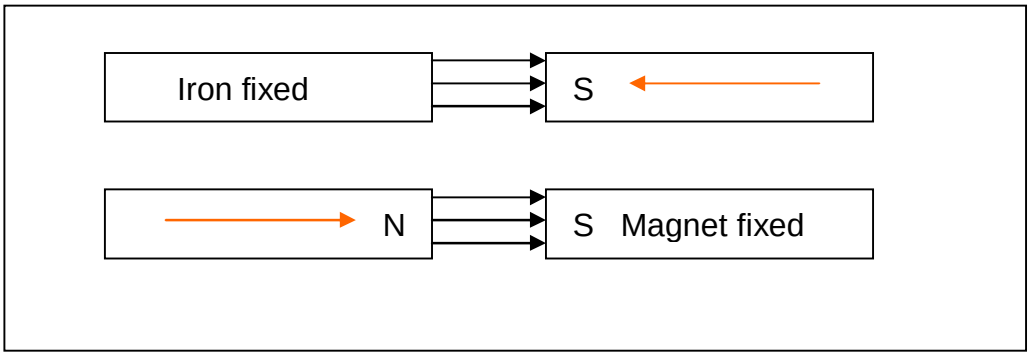

If the iron is held stationary, the magnet will move toward the iron. If the magnet is held stationary, the iron will move toward the magnet.

36.3 To test a needle with a magnet to determine whether the needle is magnetized, why must you observe “repulsion” before you can be sure it is magnetized?

If a needle is not magnetized, a magnet will attract it anyway. Only repulsion shows that the needle has been magnetized, since repulsion can only occur when the needle is producing its own magnetic field (the needle has been magnetized).

36.4 A nail lies with its head near the N pole of a bar magnet. Diagram the nail and magnet, and draw from the N pole through the nail a closed curve to represent one line of magnetic force.

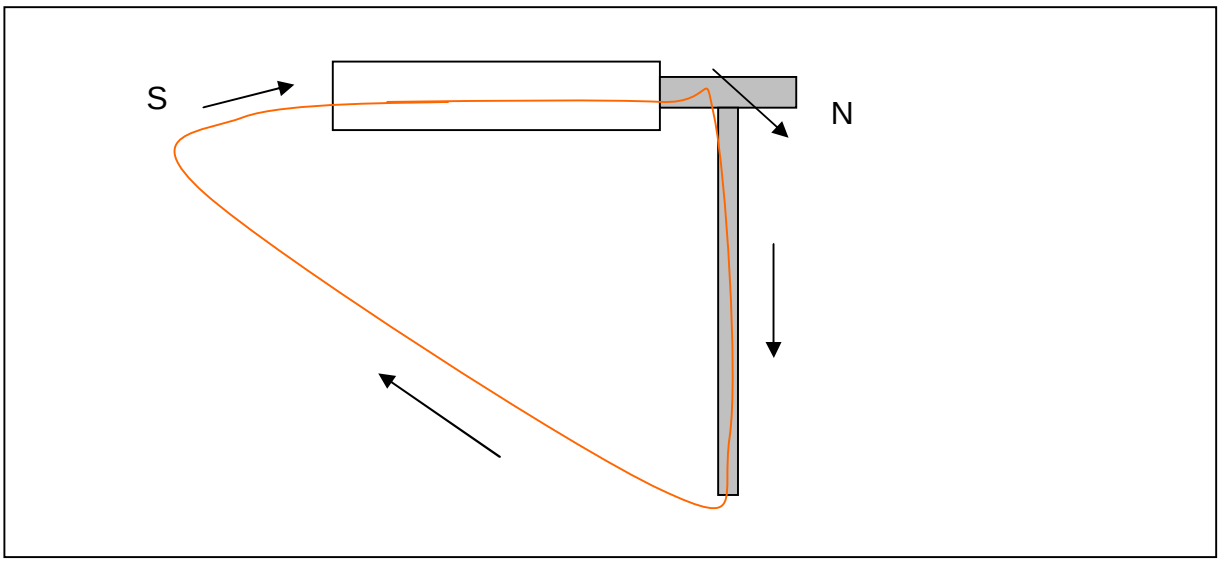

Magnetic lines of force always leave the north pole of a magnet and enter the south pole of a magnet. They are always closed loops. They always leave the north surface of the magnet at right angles (90° angles) to this surface of the magnet at the point they leave the magnet, and they always enter the south surface of the magnet at right angles to this surface at the point they enter the magnet.

36.5 Explain, on the basis of induced magnetization, the process by which a magnet attracts a piece of soft iron.

One of the magnetic poles of the magnet attracts the opposite magnetic pole of the molecules of iron in the piece of soft iron. The molecules in the iron turn so that their opposite polarity ends are directed toward the pole of the magnet (the iron becomes

a mirror image of the magnet). In this situation the attraction of all of the molecules in the piece of soft iron toward the magnet is strong enough to overcome the force of friction holding the piece of soft iron still on the surface it is resting on, and the soft iron is pulled toward the magnet.

36.6 Do the facts of magnetic induction suggest to you any reason why a horseshoe magnet retains its magnetism better when a bar of soft iron (called a keeper, or armature) is placed across its poles than when it is not so treated?

The keeper itself becomes a magnet, allowing the lines of force to be as short as possible, and as strong as possible. The molecules of the horseshoe magnet and the keeper are aligned with the magnetic lines of force that run through them.

36.7 Why should the needle in a “needle-dip” experiment be placed east to west when adjusting for neutral equilibrium before it is magnetized?

This position causes the magnetic field lines of the earth’s magnetic field to cut across the needle at right angles. At a right angle the field lines can not induce magnetism in a magnetizable material. This allows the needle to be completely de-magnetized before it is neutralized to be used in an experiment.

36.8 How would an ordinary compass needle act if placed over one of the earth’s magnetic poles?

The magnetic needle would be pulled down on one end and pushed up on the other end. At the North Pole the north end of the needle would be pushed up and the south end would be pulled down. At the South Pole the south end of the needle would be pushed up and the north end would be pulled down.

36.9 Why are the tops of steam radiators South Magnetic Poles, as proved by the constant repulsion of the south end of a compass needle?

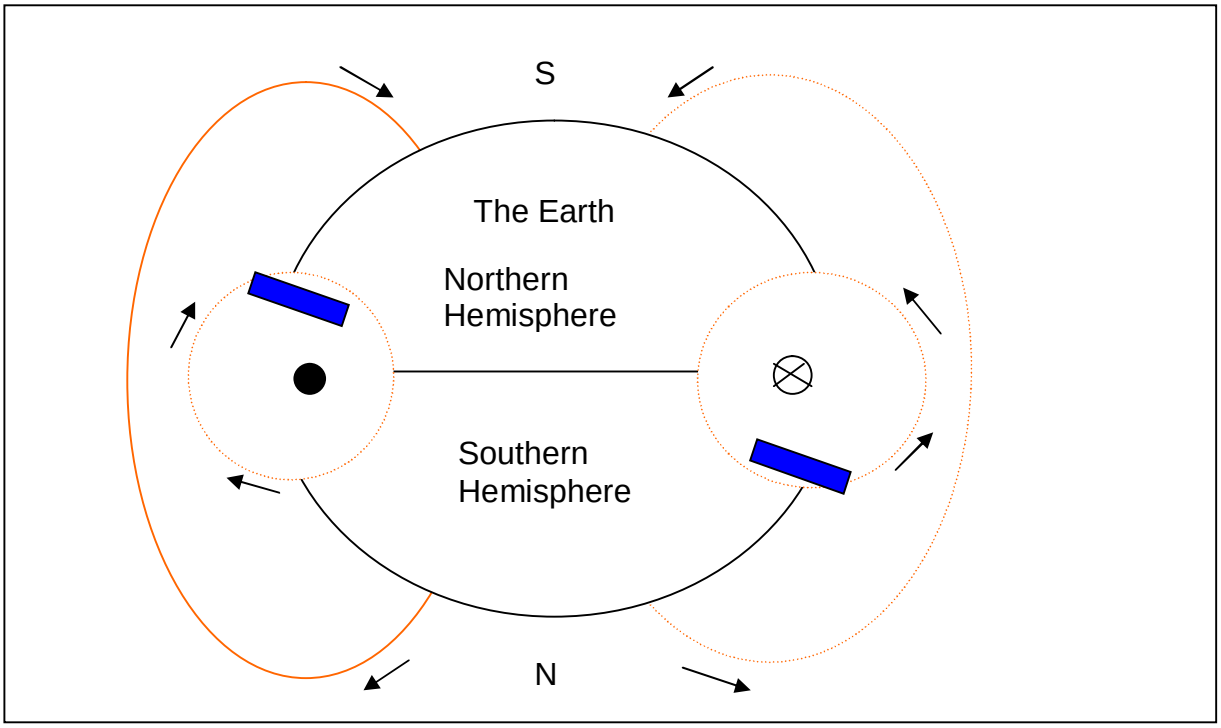

The black dot shows the electrons in the earth's magma moving toward us. The circle with the x in it shows the electrons in the earth's magma moving away from us. The earth is rotating toward the east.

The earth's magnetic lines of force enter the top of the radiator in the northern hemisphere and leave it from the bottom. The surface at which magnetic lines enter a magnetizable material attracts the south poles of the molecules in that material, causing the south end of the iron molecules in the radiator to be directed "upward".

The earth's magnetic lines of force enter the bottom of the radiator in the southern hemisphere and leave it at the top. The surface at which magnetic lines leave a magnetizable material attracts the north poles of the molecules in that material causing the north end of the iron molecules in the radiator to be directed "upward".

In the northern hemisphere, the top of the radiators have a south pole.

In the southern hemisphere, the top of the radiators have a north pole.

Notice: this means that the northern hemisphere has a magnetic South Pole, while the southern hemisphere has a magnetic North Pole.

***We call the north pole in the northern hemisphere the north pole, because it attracts the <u>north end of a compass needle</u> toward it. It is, however, a south pole.**

***We call the south pole in the southern hemisphere the south pole, because it attracts the <u>south end of a compass needle</u> toward it. It is, however, a north pole.**

36.10 Give two proofs that the earth is a magnet.

The earth can influence a compass needle, so it must possess a magnetic field. Substances that posses a magnet field are, by definition, a magnet.

The earth can magnetize magnetizable materials. It must therefore be a magnet.

36.11 A magnetic pole that has a strength of 80 units is 20 cm distant from a similar pole having a strength of 30 units. Find the force between them.

***The force in dynes which any two magnetic poles exert on each other is the product of the pole strengths, divided by the square of the distance between them, measured in centimeters.**

$\frac{80 \times 30}{20 \times 20} = \frac{2400}{400}$ =6dynes. Because the two poles are similar, the force between them is a force of repulsion.

37. STATIC ELECTRICITY

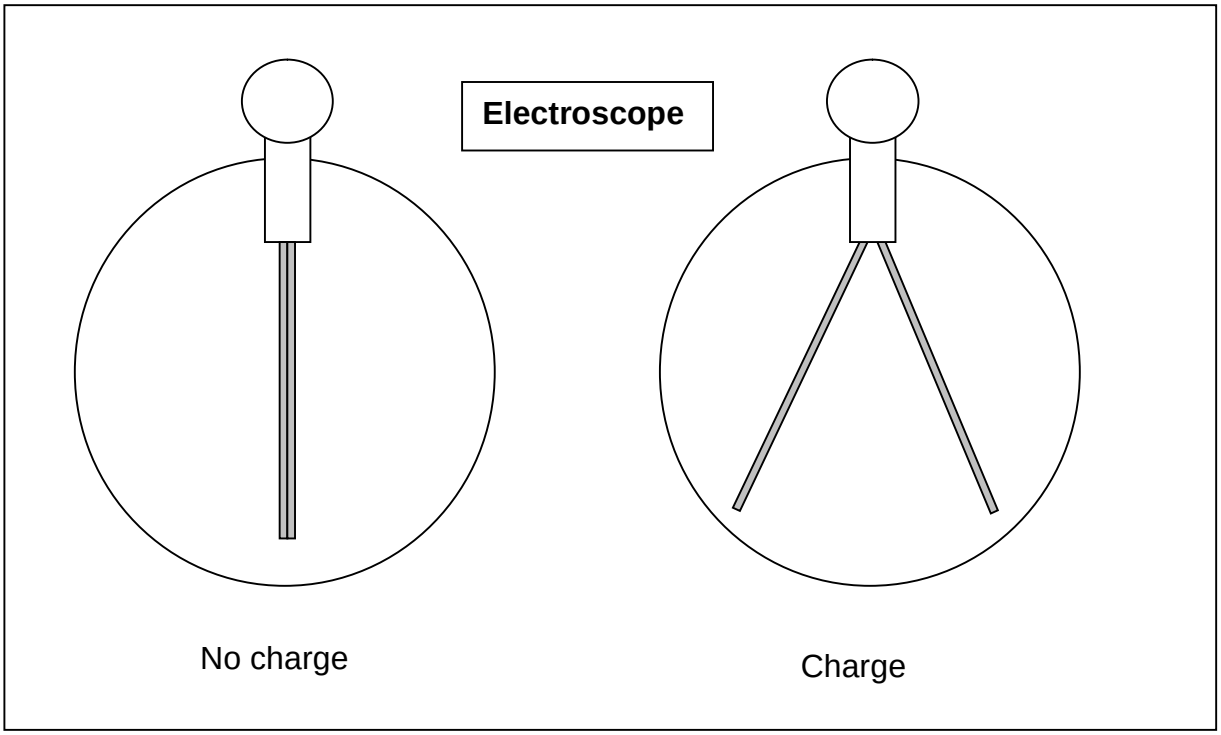

The picture shows an electroscope, a device used to find out whether an object is carrying a charge of static electricity, either + or -.

If an object is touched to the upper ball of an electroscope, and the leaves (shown in grey) of the electroscope remain hanging together, the object is not charged.

If an object is touched to the upper ball of an electroscope, and the grey leaves of the electroscope move away from each other, the object is carrying an electric charge.

If the object was charged with a negative charge (the object has an excess of electrons), the leaves of the electroscope will each become charged with a negative charge. The leaves will repel each other because like charges repel each other.

If the object was charged with a positive charge (the object has a depletion of electrons), the leaves of the electroscope will each become charged with a positive charge. The leaves will again repel each other because like charges repel each other.

***An electroscope can show us whether an object is carrying an electrostatic charge, but we do not know *which kind of electrostatic charge* the object is carrying.**

The following problems show how to find out which kind of electrostatic charge is present when the electroscope shows us that it is charged.

One unit charge of electricity that is 1 centimeter away from a second unit charge of electricity causes a force of repulsion of 1 dyne between them.

**1 unit of charge is* 2.095×10^{9} *electrons.*

A force of 1 dyne will give to a mass of 1 gram an acceleration of 1 cm/s².

37.1 If a light ball made of a material that can carry an electrical charge is placed between two plates, one of which is connected to the earth and the other is connected to a high electrostatic charge (either + or -), the ball will bounce back and forth between the two plates. Explain why this happens.

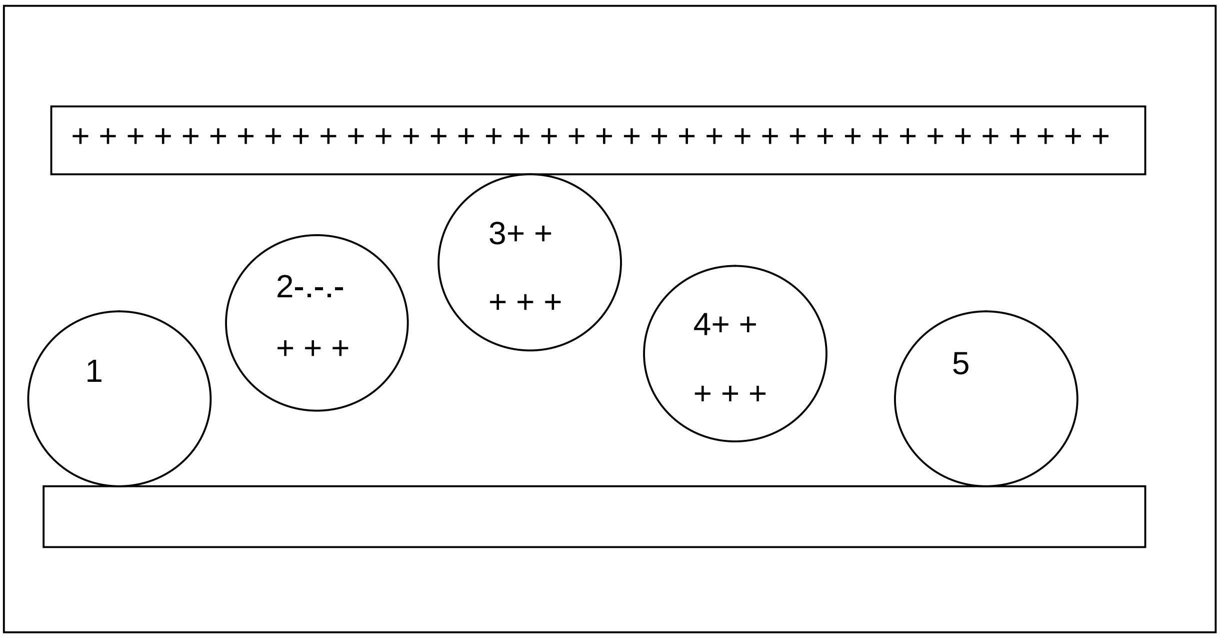

At position 1 the ball is not charged, meaning that the + and the – charges in it are present in about the same number. Then a high + charge is switched onto the top plate (some kind of power supply removes electrons from the top plate; + charges appear where these electrons used to be in the top plate).

At position 2 the strong + charge on the top plate attracts the – charges (electrons) in the ball, leaving + charges in the lower part of the ball where these electrons earlier were. The – charges (electrons) in the ball move toward the top of the ball and the + charges in the ball appear toward the bottom of the ball. The + charge on the top plate attracts the – charge on the top of the ball with a force that pulls the ball upward toward the top plate.

At position 3 the ball touches the top plate. The – charges (electrons) are pulled with great force from the ball, and the ball is left being charged with a strong + charge. The ball and the plate instantly have the same charge, and like charges repel each other.

At position 4 the + charges in the top plate are pushing the + charges on the ball downward toward the earth plate.

At position 5 the ball has touched the earth plate again. The + charge on the ball attracts – charges (electrons) from the earth until the number of electrons on the ball

is about equal to the number of + charges on the ball, and the ball is in a “neutrally charged condition” again.

We see that the electrons flow from the earth to the ball and then to the top plate where they are removed by some kind of power supply. The power supply returns the electrons it removed from the ball and the top plate back to the earth. The power supply works like an “electron pump”.

37.2 Given a gold-leaf electroscope, a glass rod and a piece of silk, how, in general, would you proceed to test the sign of the electrification of an unknown charge?

Touch the object to the ball of the electroscope. The leaves move away from each other, so we know that the object is carrying an electrostatic charge, but we do not know which kind of electrostatic charge is being carried by the electroscope.

Rub the glass rod with a silk cloth. This rubs electrons off of the glass rod and leaves the glass rod with a positive electrostatic charge. We know that the charge on the glass rod is now +.

Move the end of the glass rod close to the ball of the electroscope *without touching the ball*. The positive charge on the glass rod will attract negative charges and will repel positive charges, because it is charged positive.

If the leaves of the electroscope move closer to each other, the charge on the leaves of the electroscope has been decreased. The glass rod with its positive charge has weakened the charge on the leaves of the electroscope by attracting the charge on the leaves toward it. The glass rod can only attract a negative charge, because it is carrying a positive charge. The charge on the leaves of the electroscope must therefore be negative. The charge on the object that charged the electroscope must be negative.

If the leaves of the electroscope move farther away from each other, the charge on the leaves of the electroscope has been increased. The glass rod with its positive charge has strengthened the charge on the leaves of the electroscope by repelling the charge on the ball of the electroscope away from it toward the leaves. The glass rod can only repel a positive charge, because it is positively charged. The charge on the leaves of the electroscope must therefore be positive. The charge on the object that charged the electroscope must be positive.

37.3 Charge a gold-leaf electroscope using a glass rod (it is now positively charged). Warm a piece of paper and stroke it on your clothing. Hold it over the charged electroscope. If the leaves move away from each other, is the charge on the paper + or -?

The electroscope is charged positive. Its leaves will move farther apart if this positive charge becomes stronger. Positive charges must move from the ball of the electroscope toward the leaves. The only charge that can cause this to happen is a positive charge. The paper must be charged positive.

If the leaves of the electroscope move closer together, what is the charge on the paper?

The electroscope is charged positive. Its leaves will move closer together if this positive charge is weakened. Positive charges must move from the leaves of the electroscope toward the ball. The only charge that can cause this to happen is a negative charge. The paper must be charged negative.

37.4 If you are given a positive charged insulated sphere, how could you charge two other spheres, one positive and the other negative, *without weakening the charge on the first sphere?*

Place the two spheres to be charged in contact with another (they are touching another).

Move the positive-charged sphere close to one of the other two spheres *without touching it.*

The positive charged sphere will attract electrons from *both of the two spheres in contact with another*, and these electrons will move nearest to the positive charged sphere.

The sphere farthest from the positive-charged sphere loses these electrons (becomes positive-charged).

The sphere closest to the positive charged sphere gains these electrons (becomes negative-charged).

Separate the two spheres that are in contact with another. One is now positive-charged and the other is negative-charged.

Move the original positive-charged sphere away from the other two spheres; it has not lost its charge, because it never came in contact with anything else.

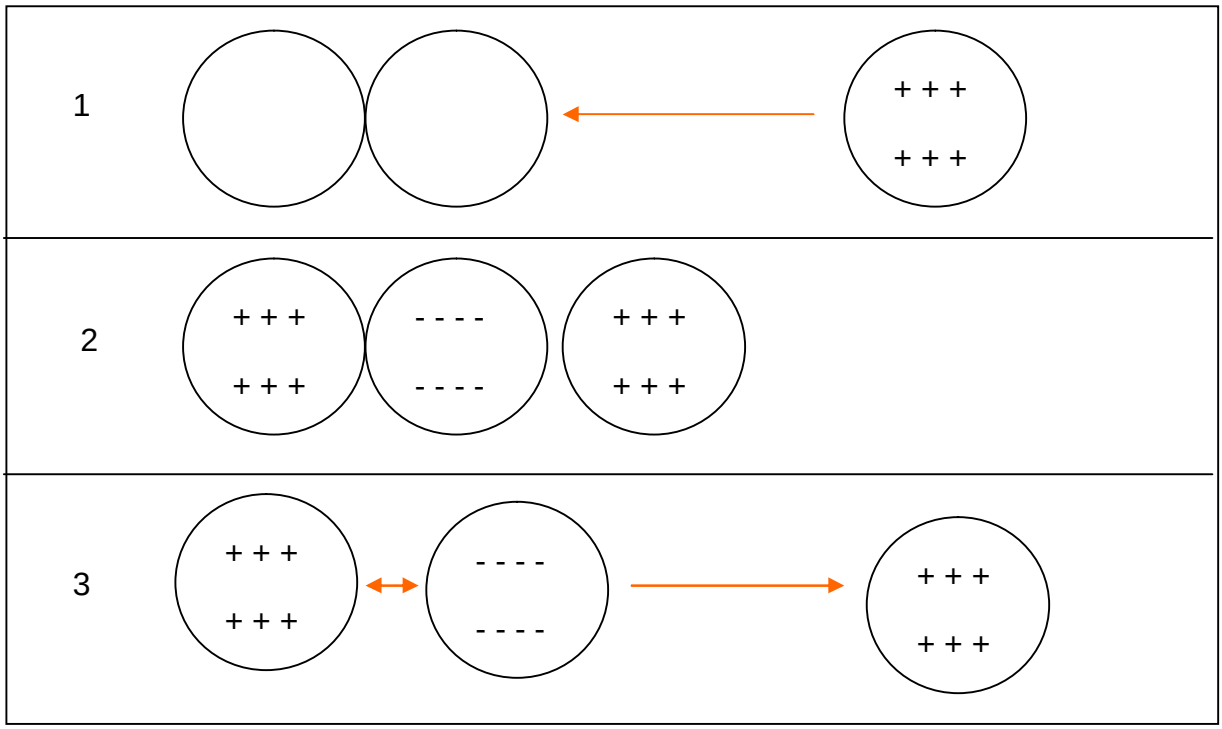

37.5 If you bring a positive-charged glass rod near the ball of an electroscope and then touch the ball with your finger, why do you not remove the negative electricity which is on the ball?

The electroscope is uncharged. The glass rod attracts electrons. These electrons come from the leaves of the electroscope, leaving a positive charge on the leaves of the electroscope.

When the ball of the electroscope is touched by the finger, *electrons flow from the finger toward the positive charge in the leaves of the electroscope*. The leaves of the

electroscope are now no longer charged and fall next to each other. There are now more electrons in the electroscope than when it was uncharged.

If the finger is removed from the ball of the electroscope, and the glass rod is removed *afterward*, the excess electrons in the electroscope will move equally throughout the electroscope, the leaves of the electroscope will contain an excess of electrons, and they will move apart from each other, indicating a charged condition.

This method of charging an electroscope is called “Charging by Induction”.

37.6 When charging an electroscope by induction, why must the finger be moved away from the ball of the electroscope *before* the charged body is removed from its position near the ball?

The charged body causes electrons to flow into or out of the electroscope through the finger.

If the charged body is moved away from the ball of a positive-charged electroscope while the finger is still touching the ball of the electroscope, a flow of electrons from the finger into the electroscope will occur, and the electroscope will be neutralized (will no longer have a charge).

If the charged body is moved away from the ball of a negative-charged electroscope while the finger is still touching the ball of the electroscope, a flow of electrons out of the electroscope into the finger will occur, and the electroscope will be neutralized (will no longer have a charge).

37.7 If you hold a brass rod in your hand and rub it with silk, the rod will show no effect of being charged; but if you hold the rod with a piece of sheet rubber and then rub it with silk, you will find it to be charged. Explain why this happens.

If the rod is not insulated, electrons will flow through the hand into the brass rod as other electrons are being removed by rubbing the rod with silk. This neutralizes the rod, and it carries no charge.

If the rod is insulated, no electrons can flow from the hand into the brass rod while electrons are being removed from the brass rod by rubbing the rod with silk. This charges the rod.

37.8 State as many differences as you can between the phenomena of magnetism and those of electricity.

Magnetizing a material leaves an amount of remaining magnetism in the material when the magnetizing magnet is removed; charging a material by induction leaves no charge when the charge is neutralized.

Magnetism effects the arrangement of the positions of molecules; charging moves electrons between molecules.

37.9 If a charged rod is brought near a ball suspended by a silk string, the ball is first attracted to the rod and then repelled from it. Explain why.

Any charge that can attract the ball will draw the opposite charge to the near side of the ball.

The ball moves toward and touches the charged rod.

The ball and the rod experience a change of electrons until both of them have the same charge.

Because the ball and the rod have the same charge, they repel each other (like charges repel each other).

38. DISTRIBUTION OF CHARGE, POTENTIAL, AND CAPACITY

38.1 If you set a *charged* Leyden jar on a cake of paraffin, why can you not discharge it by touching one of the coatings?

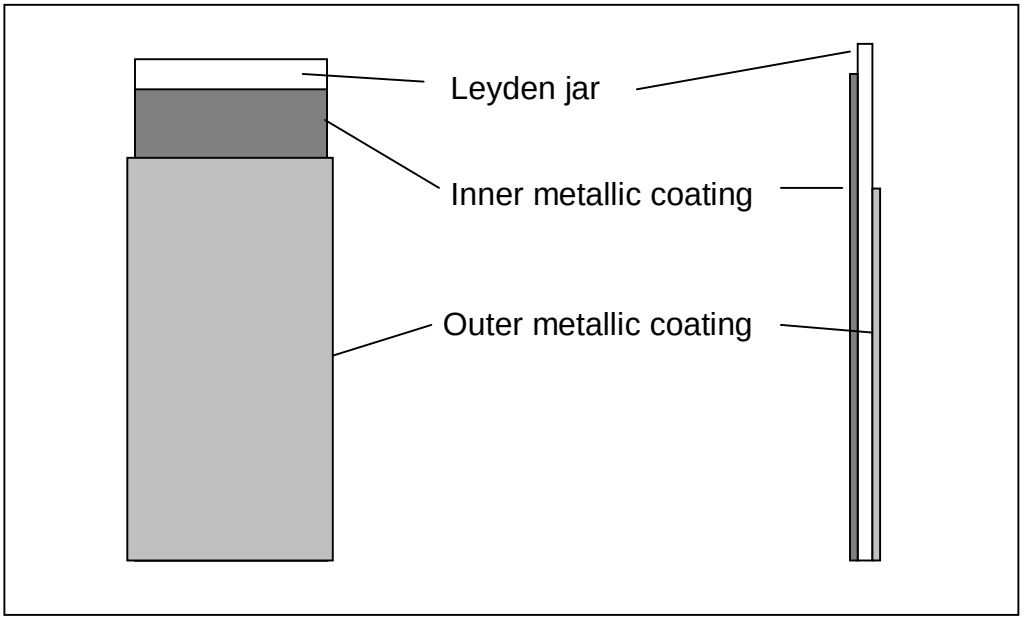

A Leyden jar is a jar that has a metallic coating on the inside (dark grey) and a metallic coating on the outside (light grey). If the inner coating is charged positive, and the outer coating is touched to the earth, the outer coating will obtain a negative charge because electrons from the earth are attracted to it. The Leyden jar is now charged.

If we insulate the Leyden jar by placing it on a cake of paraffin, the positive charges on the inside of the jar are being attracted by the electrons on the outside of the jar, and vice-versa.

If we touch the inside of the Leyden jar, we can not influence the positive charge being held there by the electrons on the outside of the jar.

If we touch the outside of the Leyden jar, we can not influence the negative charge being held there by the positive charge on the inside of the jar.

The Leyden jar was first used in Leyden, Holland, in 1745, and that is why they are called Leyden jars.

The Leyden jar is a form of condenser, a component in electrical devices that can store a charge.

If we want to discharge a Leyden jar, we have to *touch both metallic coatings at the same time with an electrical conductor*, for example, a piece of copper wire.

38.2 Will a solid sphere hold a larger charge of electricity than a hollow one of the same diameter?

A solid sphere will not hold more charge than a hollow sphere of the same size, because electrical charges are only present on the very outside surface of the conductors they are on.

*** Electric charges can only be found on the outside surface of electrical conductors.**

38.3 Why can a Leyden jar not be appreciably charged if the outer coat is insulated?

If we put a high *positive* charge on the inside coat of a Leyden jar, these charges will attract negative electrons that are in the outer coat toward them, leaving a strong positive charge on the outside surface of the outer coating. At this time the jar is not charged, because the outer coating still has the same number of electrons in it as it had before the positive charge was put on the inside coating of the jar.

If we want to charge the jar, the outside coating of the jar must be placed in contact with something that has electrons before electrons will move toward the strong positive charge on the outside surface of the outer coating. If the outer coating is insulated, this can not happen, and the jar remains uncharged.

If we put a high *negative* charge on the inside coat of a Leyden jar, these charges will attract positive charges that are in the outer coat toward them, leaving a strong negative charge on the outside surface of the outer coating. At this time the jar is not charged, because the outer coating still has the same number of electrons in it as it had before the negative charge was put on the inside coating of the jar.

If we want to charge the jar, the outside coating of the jar must be placed in contact with something that has a positive charge (*meaning any less negative charge*) before the strong negative charge on the outside surface of the outer coating can be attracted away from the outer coating of the jar. If the outer coating is insulated, this can not happen, and the jar remains uncharged.

38.4 Using a stick of sealing wax and a piece of flannel, in what two ways could you give a positive charge to an insulated body?

First, we could rub the stick of sealing wax with the piece of flannel, which would give the sealing wax a positive charge. Touching the sealing wax to the insulated body causes electrons to be attracted away from the body toward the sealing wax; this leaves the insulated body with a positive charge. We have *directly charged* the insulated body by touching it with the charged sealing wax.

Second, we could place two insulated bodies in contact with another and approach one of them (which we will call the first one) very closely with the positive charged stick of sealing wax *without touching* the insulated body. The sealing wax attracts electrons toward it, leaving positive charges on the other side of the insulated body. These positive charges attract electrons from the second insulated body, and these electrons move off of the second insulated body and onto the first insulated body. When we now separate the two insulated bodies from each other *before removing the positive charged stick of sealing wax away from the body it is charging*, the first insulated body will be negative charged, and the second insulated body will be positive charged. We have charged both insulated bodies *by induction* (meaning we did *not* touch one of them directly with the charged stick of sealing wax).

38.5 Explain, using a set of drawings, the charging of the cover of an electrophorus.

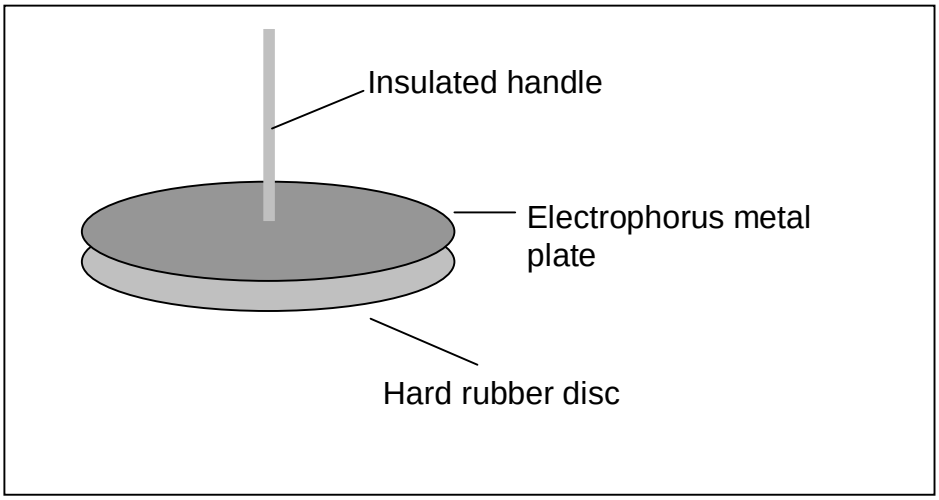

An electrophorus is an electrical machine capable of producing strong electrostatic charges. It produces these charges by *induction*, not by friction.

The hard rubber disc is highly charged by rubbing it with cat fur or flannel.

A metal plate is placed over the rubber disc, and touched by the finger to cause it to become highly charged with the charge opposite to that on the rubber disc.

The finger is now removed from the plate, and the plate is removed from the rubber disc using the insulated handle.

When the disc is brought near a conductor, it can cause sparks that are ¼ of an inch long or longer to jump between it and the conductor.

38.6 Represent by drawing the electrical condition of a tower just before it is struck by lightning, assuming the cloud at this particular time to be powerfully charged with + electricity.

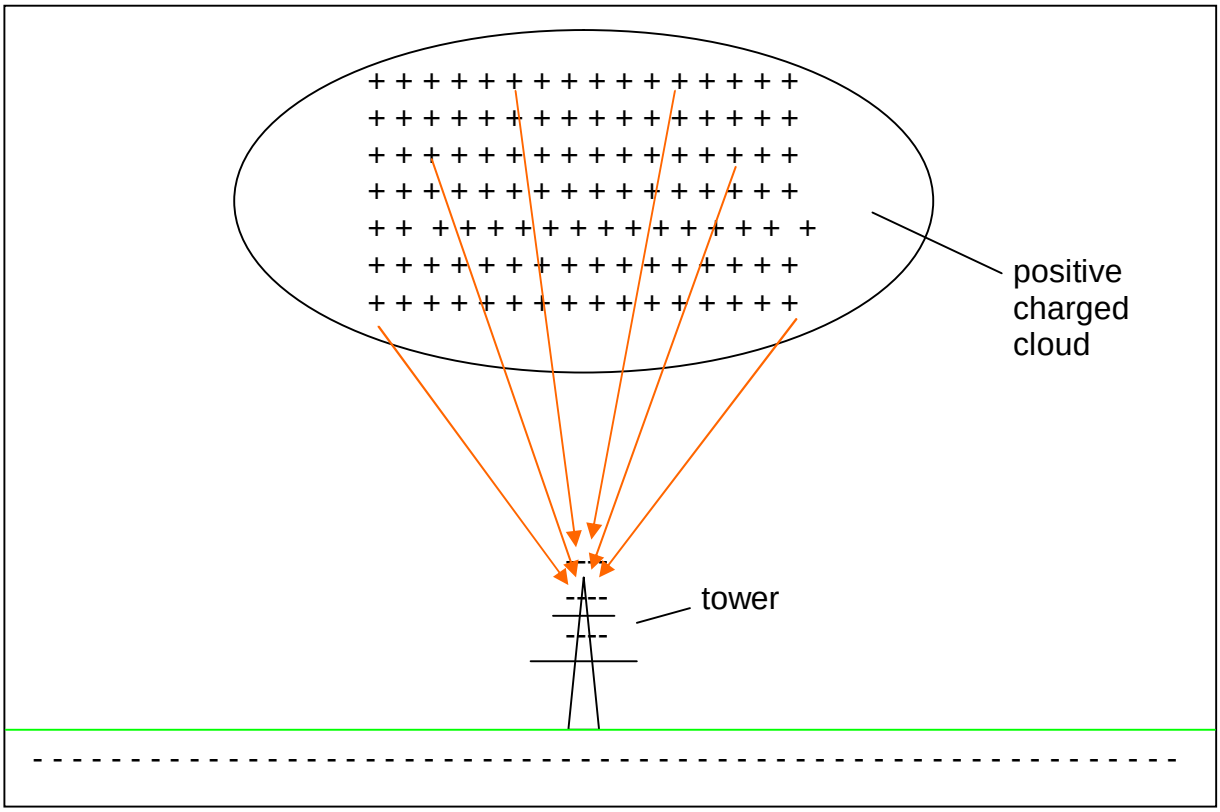

In nature, + and – electricity always appear in pairs. Wherever there is a + charge, there is a – charge to match it. Wherever there is a - charge, there is a + charge to match it.

When these pairs are disturbed, when one of them is removed from the other, each of them tries to find a charge of the opposite kind to form a pair again.

When they are paired, neither one of them exerts a force on any other charge around them. When they are separated, each charge exerts an attractive force on a charge in its area that is of its opposite kind and closest to it. This force is what we call an electric field, which is shown in red arrows in the picture.

It has become customary to show the direction of this force field as beginning at positive charges and ending at negative charges. For this reason, electrons always move in a direction opposite to the direction of the electric force field.

Each + charge in the cloud is trying to attract a – charge that is nearest to it. The – charges that are nearest to the cloud in the picture are on the tower. The force of the electric field is very strong at the top of the tower, and it attracts electrons away from the tower toward the cloud. This leaves a positive charge on the base of the tower that is immediately "neutralized" by electrons from the earth instantly forming pairs with them.

***The earth can be considered to be an inexhaustible source of electrons, or – charges.**

So, the earth supplies electrons to the tower constantly each time a + charge appears on the tower because of electrons being "pulled" from the tower by the strength of the electric field. The electric field is caused by the + charges in the cloud acting on the electrons nearest to them (on the tower).

This is the situation just before "lightning" occurs.

When a stream of electrons begins to leave the tower toward the cloud because of the force of the electric field acting on them, an avalanche of electrons begins to flow toward the cloud. We realize this electron flow as lightning. The electrons from the tower move close to the positive charges in the cloud, where they pair with the positive charges in the cloud to "neutralize" the positive charges in the cloud. When this happens, the strength of the electric force field is reduced below the strength required to support the lightning, and the massive flow of electrons stops.

***The red arrows indicate a separation of unlike charges. We say that the electric potential is higher at one location than at another location. If an electron is caused to move from its location to another by an electric field, we say that the <u>electric potential</u> is higher where the electron moved to than where it was. Electric potential is measured in <u>volts</u>.**

38.7 When a negatively charged cloud passes over a house that has a lightning rod, the lightning rod neutralizes the cloud. How?

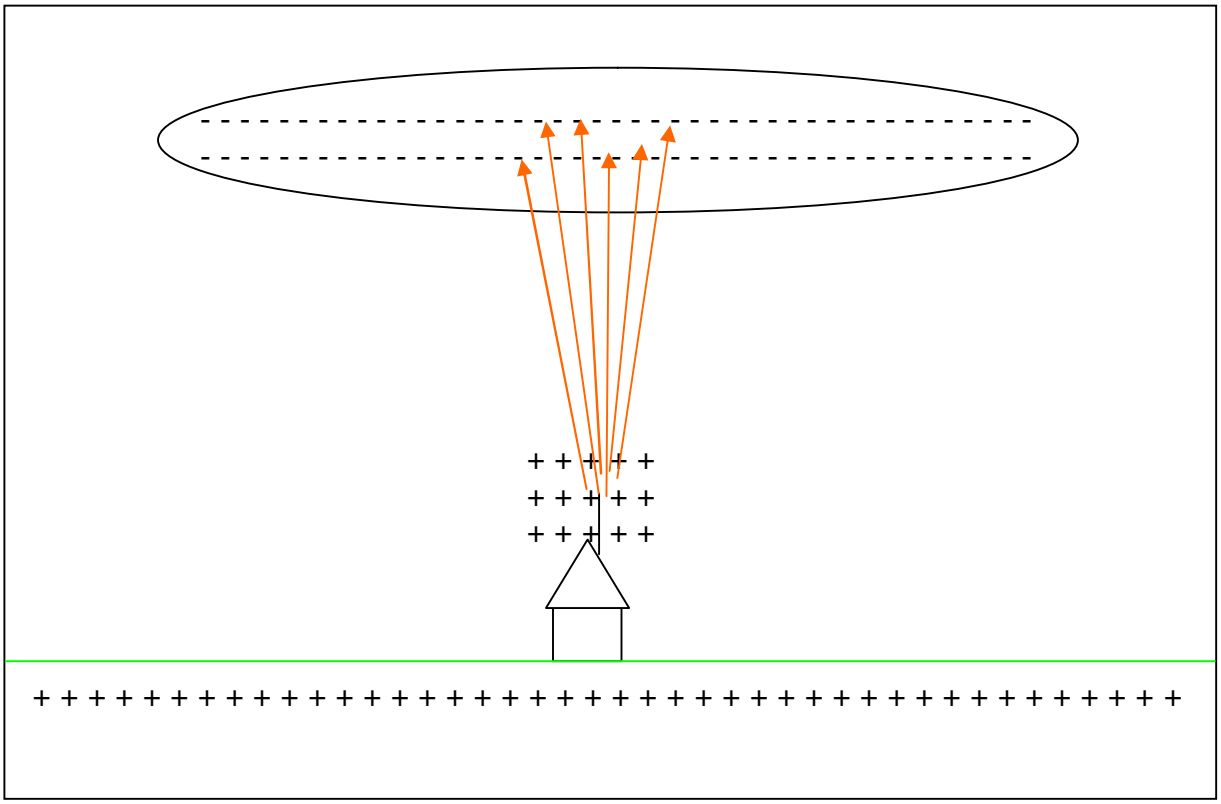

***Although the earth can be considered to be an inexhaustible source of electrons, the cloud is <u>more negative</u> than the earth. Compared to the cloud, therefore, the <u>earth is a positive charge</u>, and the more dense electrons in the cloud are attracted toward the less dense electrons (the positive charge) on the earth.**

The lightning rod has a sharp point on its end. Charges on any object collect in a more dense collection on surfaces that are sharply curved.

Dense means the number of charges on a certain area. The more curved the surface, the denser are the charges on the surface at that location (many more charges are there on a smaller area than can be found on the same area anywhere else on the lightning rod).

A sharp point is extremely curved, so the density of positive charges on the lightning rod is extremely high on the point's very small area. The point of the lightning rod is carrying a very strong positive charge, compared to the negative charge of the cloud.

Some of the electrons in the cloud are closest to this extremely powerful positive charge at the sharp point on the top of the lightning rod. They are attracted toward the tip of the lightning rod, and move in the opposite direction of the electric force field along the field lines, which are shown as red arrows in the picture.

This action of electrons leaving the cloud and moving through the air toward the lightning rod makes the cloud *less negative*, which *reduces the strength* of the electric force field between the cloud and the earth.

The electric force field can no longer become strong enough to cause an avalanche of electrons to leave the cloud toward the tip of the lightning rod along a path as lightning.

The electrons from the cloud move gradually toward the strong positive charges in the sharp point of the lightning rod, and make the tip of the lightning rod more

negative than the earth when they arrive there. When this happens, these electrons are attracted through the lightning rod toward the more positive earth, and the tip of the lightning rod again becomes positive and forms a very strong positive charge on its pointed tip. This process repeats itself, and the cloud is eventually discharged without lightning being able to form.

***It is very important that lightening rods are deep enough in the earth to reach moist earth. If this is not done, the dry earth will insulate the lightning rod, and it will no longer be able to discharge the clouds above it, making the chance of a lightning strike higher.**

***The red arrows in the pictures indicate a separation of unlike charges. We say that the electric potential is higher at one location than at another location. If an electron is caused to move from its location to another by an electric field, we say that the <u>electric potential</u> is higher where the electron moved to than where it was. Electric potential is measured in <u>volts.</u>**

39. ELECTRICITY IN MOTION

39.1 Under what conditions will an electric charge produce a magnetic effect?

Whenever an electron moves from one location to another, it produces a magnetic effect.

39.2 How can you test whether current is moving in a wire?

Place a compass needle near the wire. If the needle deflects, current is flowing in the wire.

39.3 How does the current delivered by a cell differ from that delivered by a static machine?

The current developed by a cell is relatively weak, but is continuous.

The current caused by an electric machine is very strong, but exists only for a very short time.

39.4 Mention three respects in which the behavior of magnets is similar to the behavior of electric charges.

A magnet has two polarities, north and south. There are only two kinds of electric charges, + and -.

Energy is stored in the magnetic field between the north and south poles. Energy is stored in an electric field between the + and – charges.

Magnets can induce magnetic fields in other objects. Charges can induce electric fields in other objects.

Mention two respects in which the behavior of magnets is different from the behavior of electric charges.

There is no shielding against a magnetic field. It is possible to shield against an electric field.

The strength of a magnetic field is limited by the number of molecules in a magnetized body that can be oriented north to south. The strength of an electric field is not limited, because the field strength depends on the number of unlike charges at each end of the field.

40. ELECTROLYSIS

*1 electrostatic charge is equal to 2.095 x 10^9 electrons
*1 coulomb is equal to 3 x 10^9electrostatic units.
*1 coulomb is equal to 6.285 x 10^{18}electrons
*1 electron has a charge of 1.591089897 x 10^{-19} Coulomb.

40.1 What was the strength of a current that deposited 11.84 grams of copper in 30 minutes?

1.181 grams of copper can be deposited by 1 ampere of current in 1 hour.

$$\frac{1.181 grams_{copper}}{1A \times 1hour} \times \frac{1}{2} hour = \frac{0.5905 grams_{copper}}{1A}.$$

One ampere will deposit 0.5905 grams of copper in ½ hour. 11.84 grams of copper were deposited in 30 minutes, however.

$\frac{1A}{0.5905 grams_{copper}} \times \frac{11.84 grams_{copper}}{1} = 20A$. A twenty ampere current flowed ½ hour to deposit 11.84 grams of copper.

40.2 How long will it take 1 ampere to deposit 1gram of silver from a solution of $AgNO_3$?

1 ampere will deposit 4.052 grams of silver in one hour.

$$\frac{4.025 grams_{silver}}{1A \times 1hour} = \frac{1 gram_{silver}}{1A \times Xhours} \Rightarrow \frac{Xhours}{1} = \frac{1 gram_{silver} \times 1A \times 1hours}{4.025 gram_{silver} \times 1A} = \frac{1hour}{4.025} \times \frac{60\min}{1hour} = 14.9\min$$

One gram of silver will be deposited by a current of 1 ampere in about 15 minutes.

40.3 If 1 ampere is passed through a solution containing a zinc salt, how much zinc would be deposited in ¼ hour?

$$\frac{1.203 grams_{zinc}}{1A \times 1hour} = \frac{Xgrams_{zinc}}{1A \times 0.25hour} \Rightarrow \frac{Xgrams_{zinc}}{1} = \frac{1.203 grams_{zinc} \times 1A \times 0.25hour}{1A \times 1hour} \cong 0.30 grams_{Zn}$$

0.030 grams of zinc will be deposited by a current of 1 ampere in about 15 minutes.

40.4 How could a silver cup be given a gold lining by use of an electric current?

Fill the silver cup with a solution of a gold acid (for example, gold-tetrachloric acid: $H[AuCl^4]$). Connect the minus pole of a battery to the outside of the silver cup, and the plus pole of the battery to a gold rod that is suspended in the acid. Gold plate will form on the inside of the cup that is in contact with the acid.

40.5 If the terminals of a battery are immersed in a glass of acidulated water, how can you tell from the *rate of evolution* of the gasses at the two electrodes which battery pole is positive and which is negative?

The greatest volume of gas will be hydrogen, which is produced at the negative pole of the battery. The other gas will be formed at the positive pole of the battery.

40.6 The coulomb is 3 billion (3×10^9) times as large as the *electrostatic* unit of electricity. How many electrons pass each second by a location on a lamp filament which is carrying 1 ampere of current?

1 ampere is 1 coulomb per second, so, in one second one coulomb of electricity will pass the point on the filament.

$$\frac{1 Coulomb}{1 s} \times \frac{2.095 \times 10^9 \, electrons}{1 Coulomb} = 2.095 \times 10^9 \, electrons \, .$$

41. MAGNETIC EFFECTS OF CURRENT, PROPERTIES OF COILS

41.1 Describe the magnetic condition of the space about a trolley car wire that is carrying a direct current.

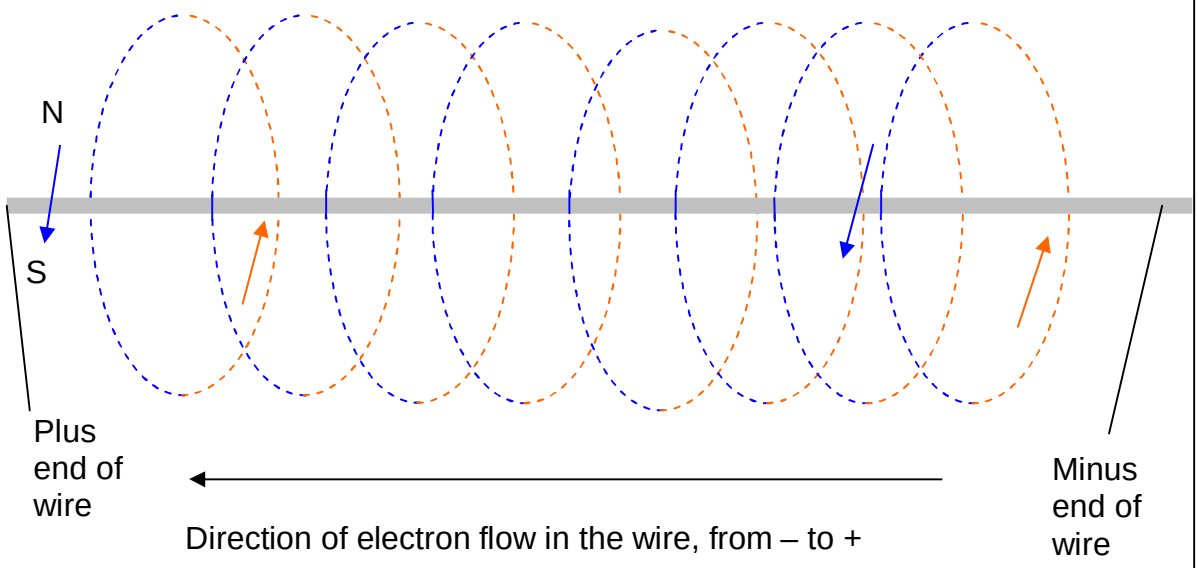

The red portions of the magnetic lines of force are behind the wire.
The blue portions of the magnetic lines of force are in front of the wire.
The beginnings of the arrows (red and blue) are a north pole.
The heads of the arrows (red and blue) are a south pole.
**If the thumb of the left hand points in the direction of electron flow, the curved fingers of the left hand show the direction of the magnetic lines of force around the electron flow (from north to south).*

41.2 In what direction will the north pole of a magnetic needle be deflected if it is held *above* a wire in which electrons are flowing from south to north?

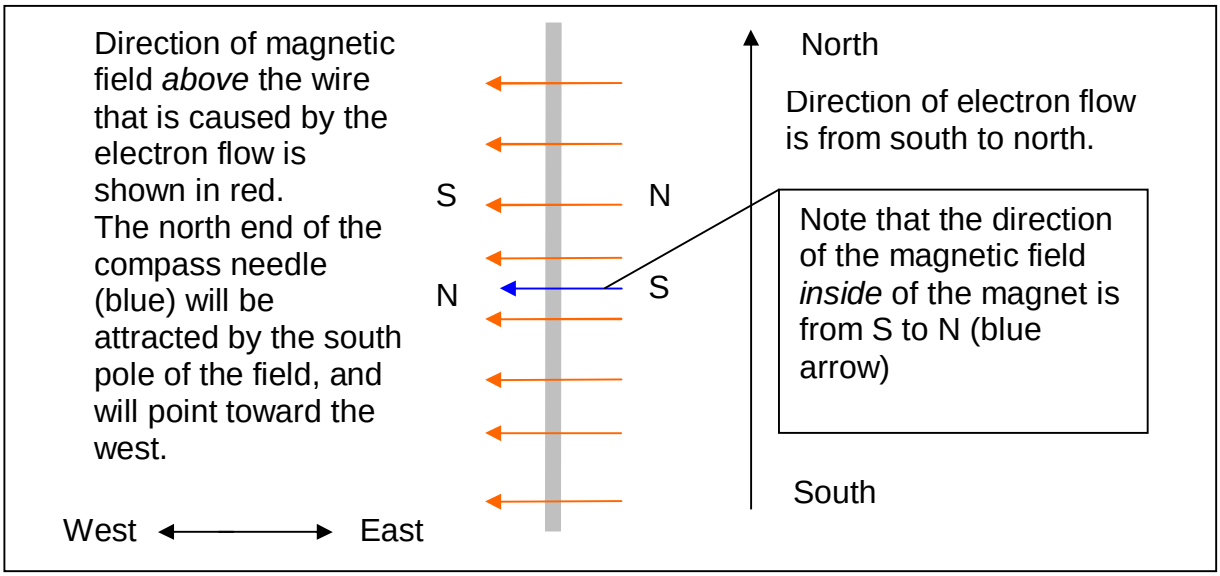

***If the thumb of the left hand points in the direction of electron flow, the curved fingers of the left hand show the direction of the magnetic lines of force (from north to south).**

41.3 A man stands *beneath* a north and south trolley line and finds that a magnetic needle in his hand has its north end deflected toward the east. What is the direction of electron flow in the wire?

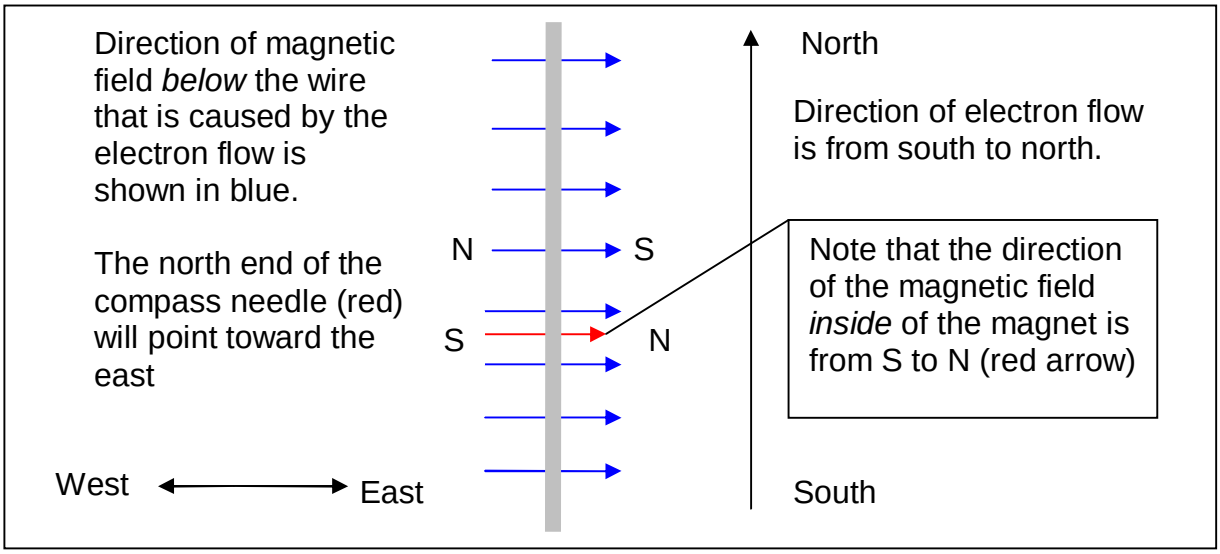

***If the thumb of the left hand points in the direction of electron flow, the curved fingers of the left hand show the direction of the magnetic lines of force (from north to south).**

41.4 A loop of wire lying on the table carries a current in which electrons flow in a counter-clockwise direction. Would a north pole at the center of the loop point up or down?

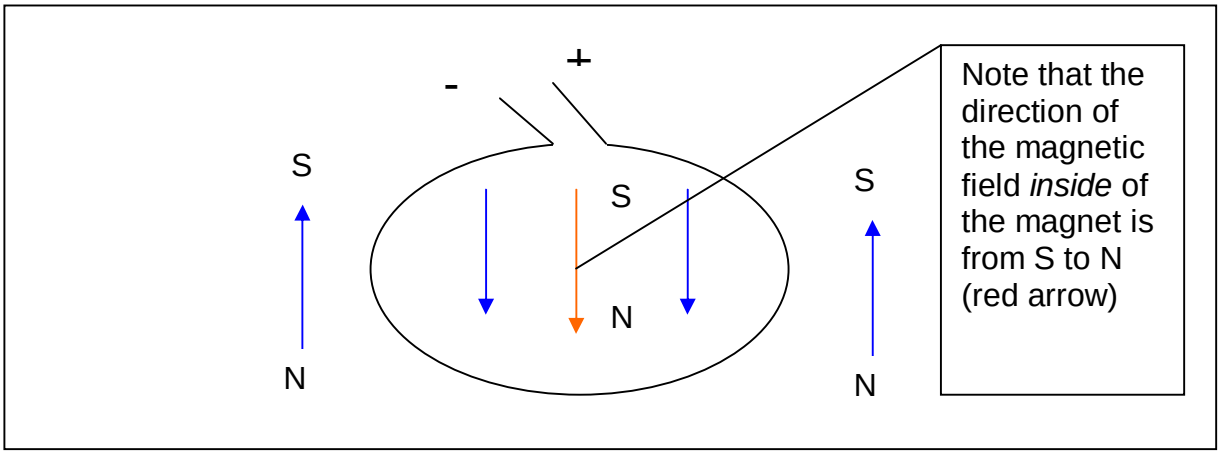

The north end of a compass placed at the center of the loop would point downward.

***If the thumb of the left hand points in the direction of electron flow (from minus to plus), the curved fingers of the left hand show the direction of the magnetic lines of force (from north to south).**

Inside of the loop, the magnetic lines of force point downward.

Outside of the loop, the magnetic lines of force point upward.

41.5 If you look down on the ends of a U-shaped electromagnet, does the current encircle the two coils in the same or in opposite directions?

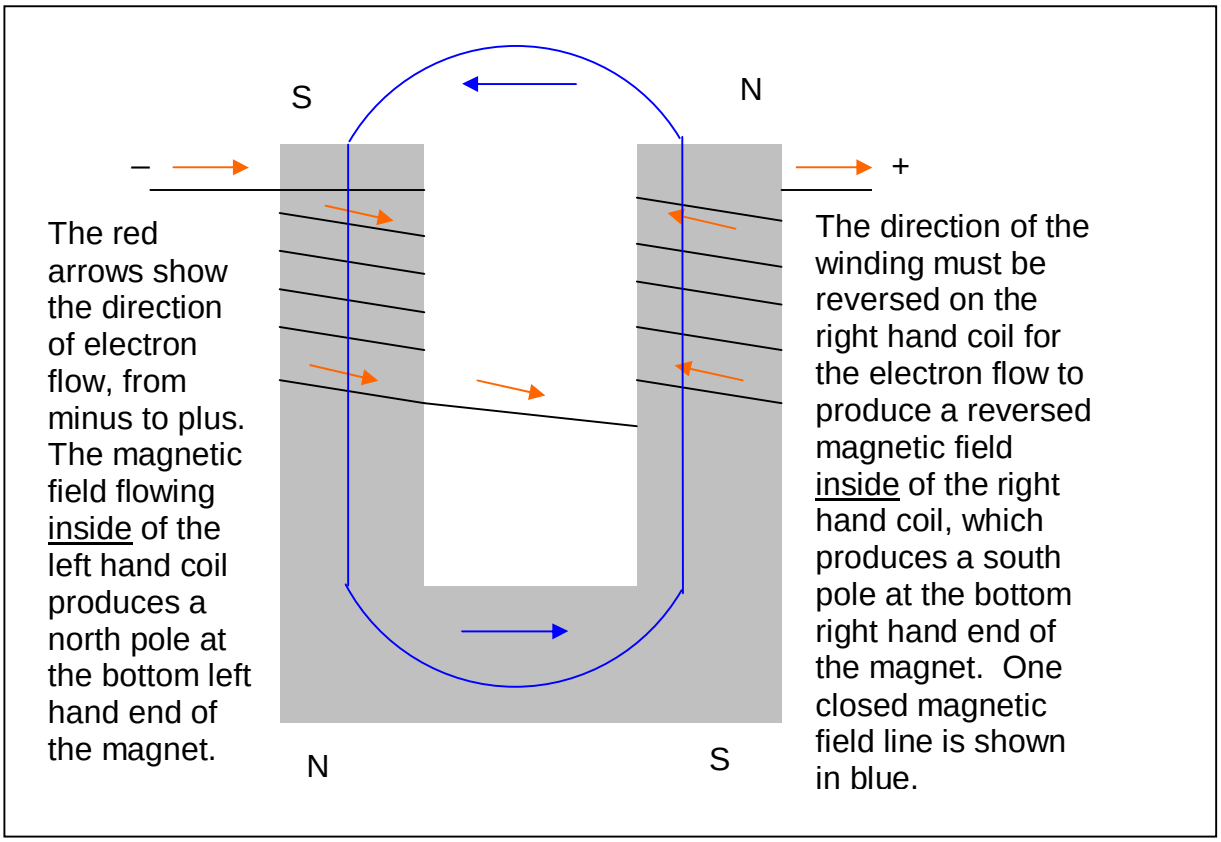

***If the thumb of the left hand points in the direction of electron flow (from minus to plus), the curved fingers of the left hand show the direction of the magnetic lines of force (from north to south).**

Inside of the left hand coil the magnetic field flows from south to north (top to bottom).

Inside of the right hand coil the magnetic field flows from south to north (bottom to top).

42. MEASUREMENT OF ELECTRICAL CURRENTS

42.1 What is the principle involved in the *chemical method* of measuring the strength of an electric current?

We compare the amount of a metal deposited on the cathode of an electrolysis bath in a certain amount of time with the known amount of the same metal that can be deposited by 1 ampere in 1 hour. This comparison tells us how strong the electrical current is.

What is the principle involved in the *magnetic method* of measuring the strength of an electric current?

First Method: A coil of a conductor that is oriented in a north-south direction causes a compass needle to be deflected in an east-west direction when the compass is placed at the center of the coil. The amount of needle deflection is a measure of the strength of the magnetic field deflecting it, which is directly proportional to the current flowing in the coil.

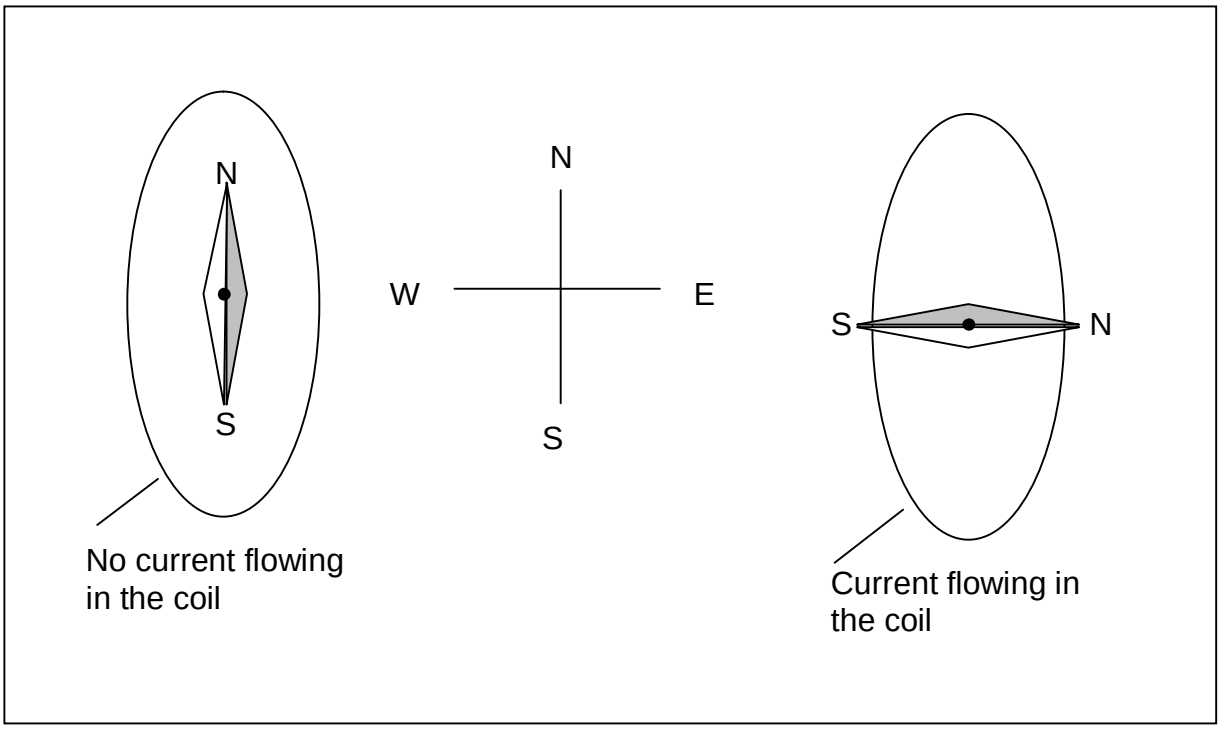

Second Method: A coil of wire is suspended by an axis in the field of a permanent magnet. An electric current moving through the wire of the coil produces its own magnetic field, which interacts with the magnetic field of the fixed permanent magnet to cause the coil to be rotated on its axis. The field of the coil tries to align with the field of the permanent magnet. The amount of coil rotation is determined by the strength of the current flowing in the coil.

A device that does this is called an ammeter. It measures the amount of current flowing in electric circuits.

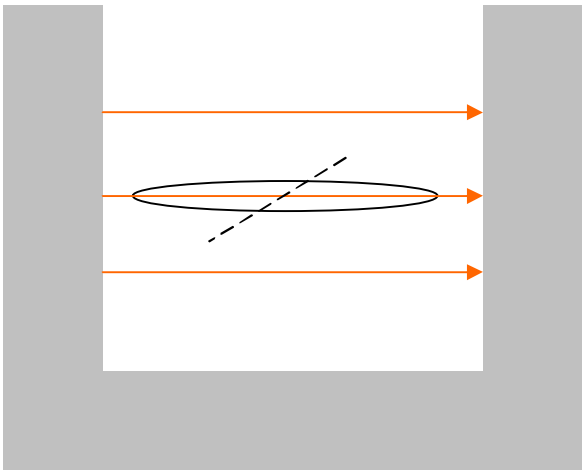

No current is flowing in the coil

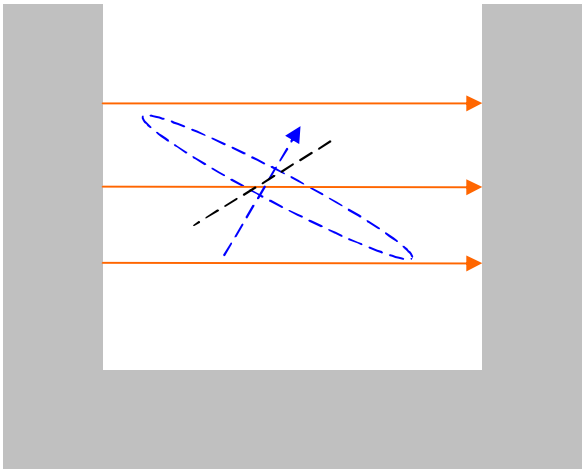

A weak current is flowing in the coil

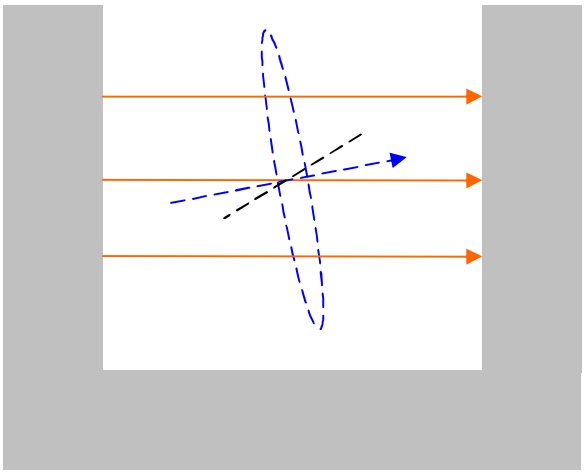

A strong current is flowing in the coil

42.2 How could you test whether the strength of an electric current is the same in all parts of a circuit?

Open the circuit. Connect an ammeter in the circuit at that location. Measure the amount of current flowing in this part of the electric circuit.

Repeat this in different parts of the circuit and compare the different measurements to determine whether all are the same.

42.3 Explain the principle of the suspended-coil (D'Arsonal) type of galvanometer.

A coil that can carry an electric current is placed in a magnetic field of a permanent magnet as shown in the picture.

The coil can rotate on an axis (shown as a dashed black line).

A spring is attached to the axis (spring shown as a dashed black circle) to hold the coil in its starting position (no current flowing through the coil).

As current begins to flow through the coil, it establishes its own magnetic field around the coil. The coils magnetic field is deflected by the magnetic field of the permanent magnet against the force of the spring acting on the coil's axis, which causes the coil to rotate on its axis. The stronger the current through the coil is, the greater will be the rotation of the coil.

When the current stops flowing in the coil, the spring returns the coil to its starting location again.

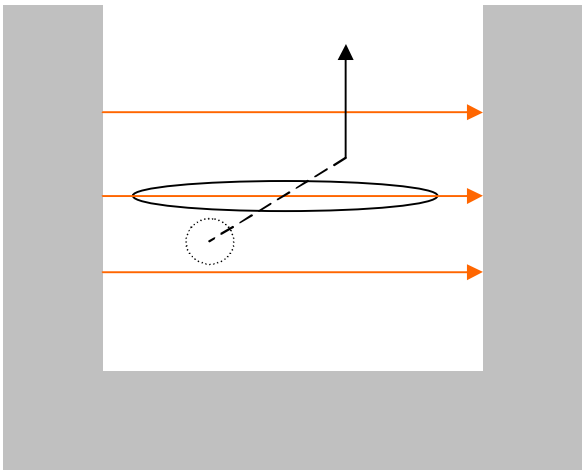

The coil is in its starting location. No current is flowing in the coil. The spring holds the coil parallel to the magnetic lines of force of the permanent magnet (red).

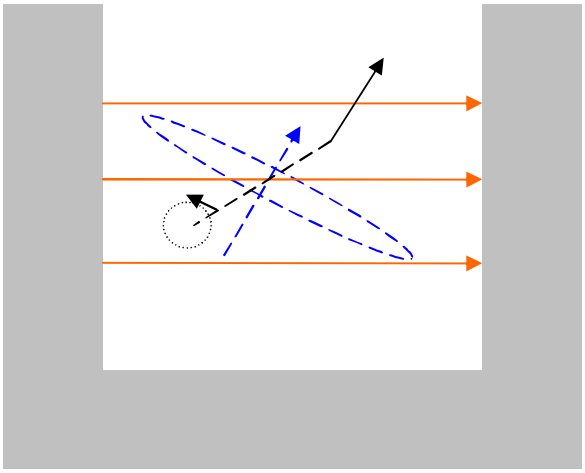

A weak current is flowing in the coil, which creates a small force strong enough to work against the tension of the spring and cause the coil (blue) to rotate slightly

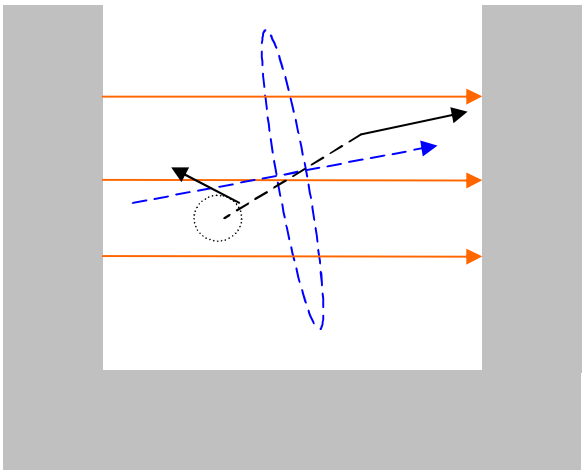

A very strong current is flowing in the coil, which creates a greater force working against the tension of the spring, causing the coil (blue) to rotate more.

***A galvanometer that has been calibrated to indicate Amperes is called an Ammeter.**

42.4 When calibrating an ammeter, the current which produces a certain deflection is found to deposit ½ gram of silver in 50 minutes. What is the strength of the current?

50 minutes is 5/6 of an hour.

A current of 1 ampere will deposit 4.025 grams of silver in one hour.

$$\frac{4.025 grams_{silver}}{1A \times 1hour} = \frac{0.5 gram_{silver}}{Xamperes \times \frac{5}{6} hour} \Rightarrow$$

$$\frac{1A \times 1hour}{4.025 grams_{silver}} = \frac{XAmperes \times \frac{5}{6} hour}{0.5 gram_{silver}} \Rightarrow \frac{XAmperes}{1} = \frac{1A \times 1hour \times 0.5 gram_{silver}}{4.025 grams_{silver} \times \frac{5}{6} hour} = 0.149A.$$

The scale for the ammeter could be marked at this location for 150 mA of current.

42.5 When a compass needle is placed at the middle of a coil of wire that lies in a north-south plane, the deflection produced in the needle by a current sent through the coil is approximately proportional to the strength of the current, provided the deflection is small – not more than 20 or 25 degrees; but when the deflection becomes large, - say 60 or 70 degrees, it increases very much more slowly than does the current which produces the deflection. Can you see any reason why this should be so?

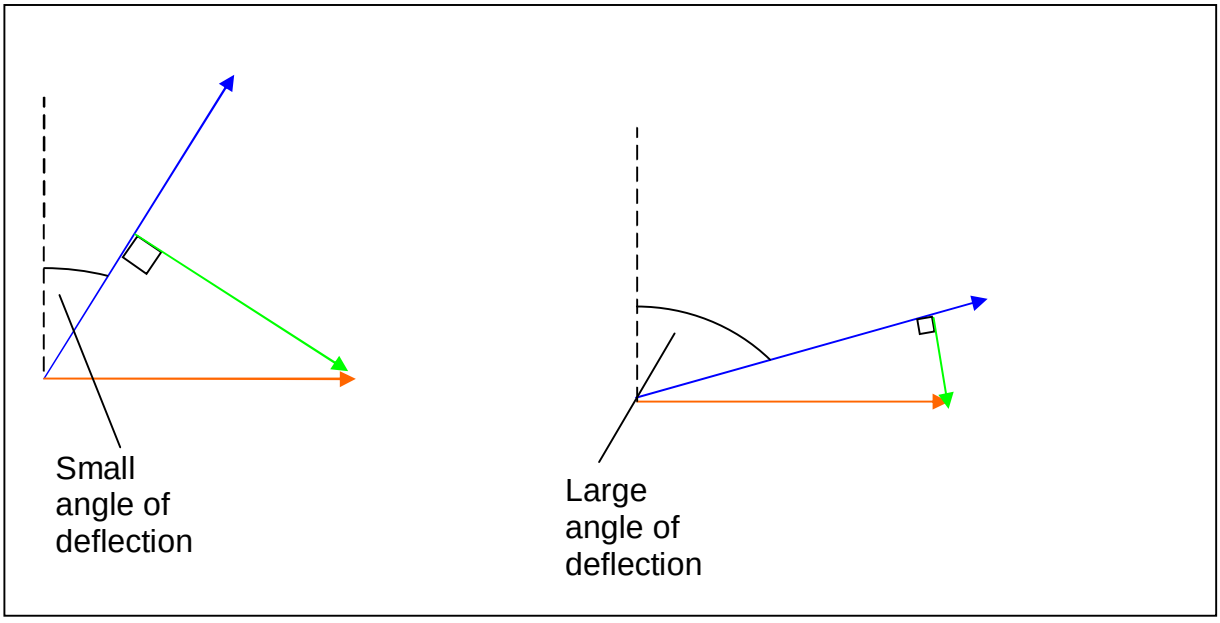

The force of the permanent magnetic field is shown in red.

The force of the coil's magnetic field is shown in blue.

As the angle of deflection becomes greater, the force of the permanent magnetic field that affects the magnetic field of the coil (green) becomes less and less. This portion of the permanent magnetic field is more nearly constant for the smaller angles of deflection, but becomes much more different as the angle of deflection increases.

42.6 How would you build an electric bell?

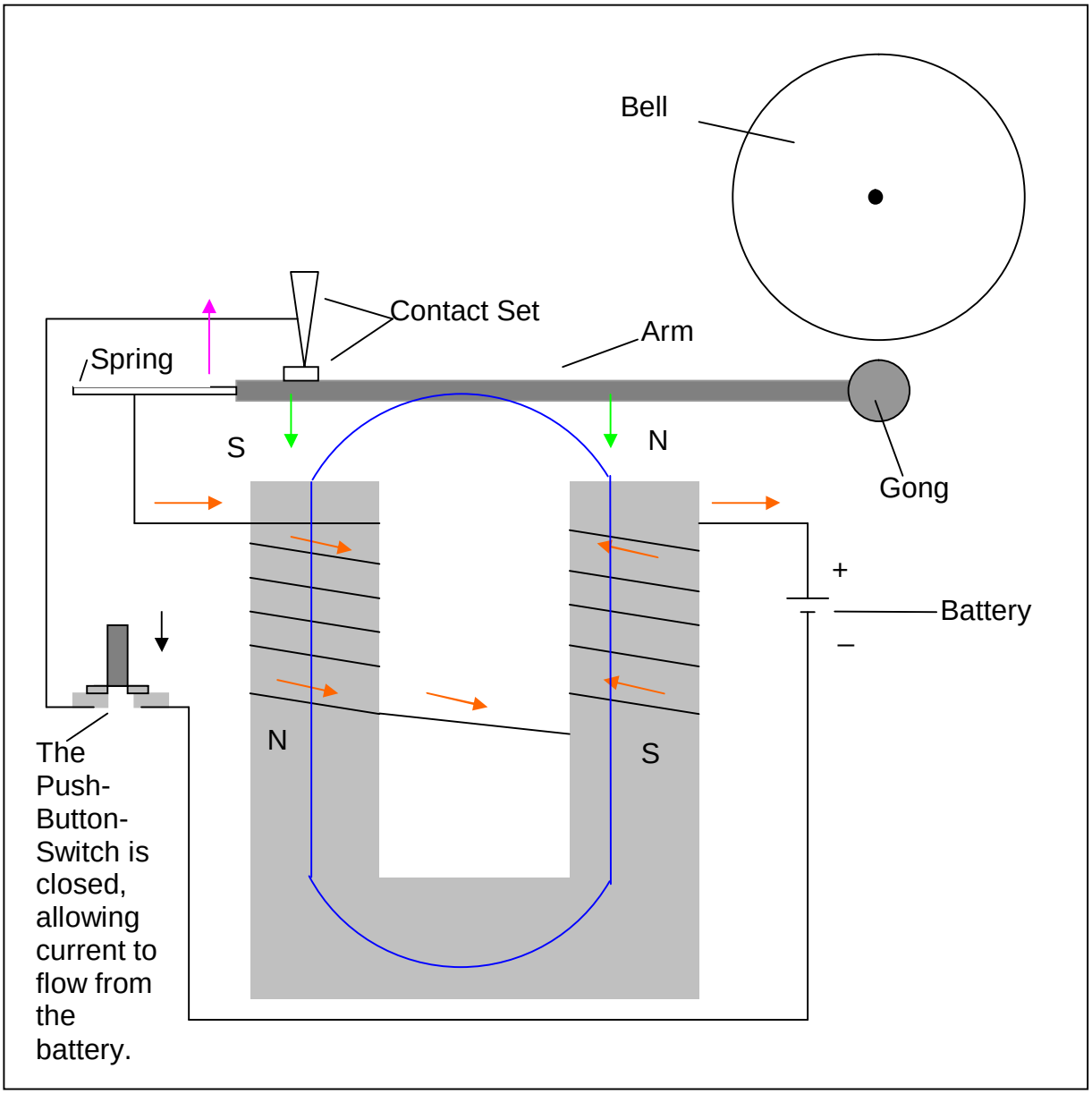

When the push button switch is pushed closed, electric current from the battery flows and activates the electromagnet. The red arrows show the direction of electron flow through the electromagnet. The magnetic field pulls the arm, made of soft iron, downward (green arrows), which moves the gong of the bell downward against the returning force of the spring (pink arrow) on the left end of the arm.

At the same time the contact set opens, which stops the flow of electricity and deactivates the electromagnet. Now the spring at the left end of the arm forces the arm and gong upward where the gong strikes the bell, causing sound.

When the arm moves upward the contact set closes again, electric current from the battery flows, and the electromagnet is activated again. The magnetic field again pulls the arm and gong downward.

As long as the push button switch is pushed closed, allowing electric current to flow from the battery, this process repeats itself many times, the gong moving first downward and then upward again to strike and “ring” the bell.

When the push button switch is released, it opens, and no more electric current can flow from the battery. The bell stops “ringing”.

43. RESISTANCE AND ELECTROMOTIVE FORCE

Whenever current flows through an electrical resistance, the voltage drop across the resistance is equal to the current flowing through the resistance multiplied by the resistance.

$$Volts = Amperes \times Ohms \Rightarrow Amperes = \frac{Volts}{Ohms} \Rightarrow Ohms = \frac{Volts}{Amperes}.$$

E=volts, I=amperes, R=Ohms.

$$E = I \times R \Rightarrow I = \frac{E}{R} \Rightarrow R = \frac{E}{I}.$$

43.1 How can you prove that the E.M.F of a cell (voltage of the cell) does not depend on the size or nearness of the plates?

A simple cell is two metal plates immersed in an electrolyte.

An electrolyte is an acid that has been dissolved in water (for example, H_2SO_4, sulfuric acid dissolved in water).

Think of a solution of sulfuric acid in which two plates of lead have been placed, as in the picture.

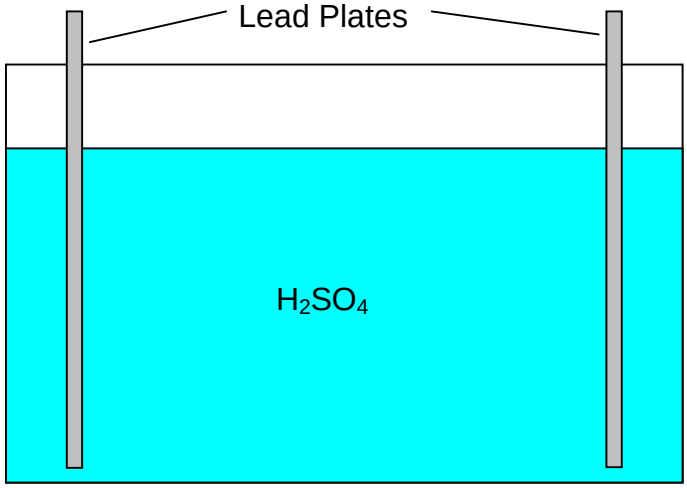

After the cell has been charged, one of the plates will be negative charged, and the other plate will be positive charged.

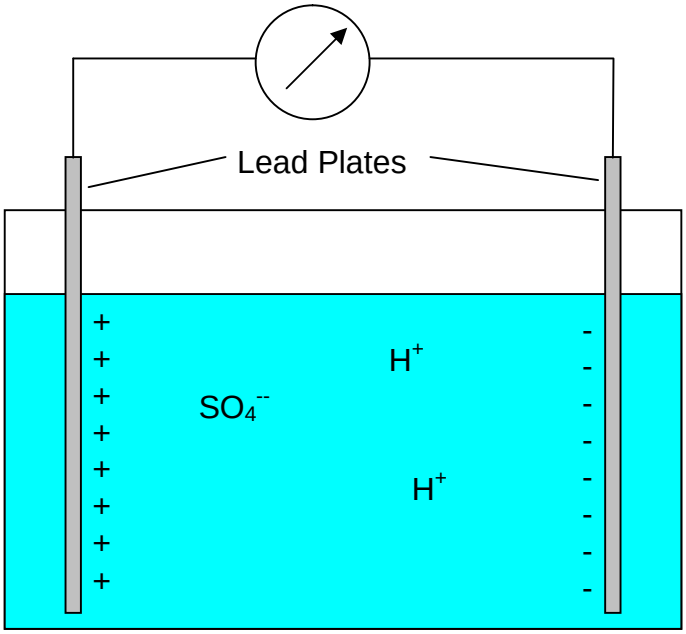

The voltmeter will show about 2 volts. Moving the metal plates deeper into the acid bath or pulling them out of the acid bath will not change the reading on the voltmeter. The E.M.F. remains the same.

The deeper the plates are lowered into the acid bath, the more charges will be formed on each plate. This means that the current (the number of electrons per second) that can flow from the cell has been increased.

If you make the plates so that they can be moved more or less deep into the electrolyte, you will find that the voltage does not change.

If you move the plates closer together and then move them farther apart, you will find that the voltage still does not change.

43.2 How can you prove that the internal resistance of a cell becomes smaller when the plates are made larger or placed closer together?

Use different size metal plates for the same cell. Take a resistor of known value and connect it between the + and – plates of the cell. Place a voltmeter in parallel to the resistor and measure the voltage drop across the resistor.

The total voltage of the cell (about 2 volts in our example) will be equal to the voltage drop across the resistor shown by the voltmeter, added to the voltage drop across the internal resistance of the cell.

The larger plates will cause a greater voltage drop across the resistor, meaning that there is a smaller voltage drop across the internal resistance of the cell. This can only happen if the internal resistance of the cell has been reduced by using the larger plates.

The smaller plates will cause a smaller voltage drop across the resistor, meaning that there is a larger voltage drop across the internal resistance of the cell. This can only happen if the internal resistance of the cell has been increased by using the smaller plates.

Moving the plates together increases the voltage drop across the resistor, meaning that there is a smaller voltage drop across the internal resistance of the cell. This can only happen if the internal resistance of the cell has been reduced by moving the plates closer together.

Moving the plates farther apart decreases the voltage drop across the resistor, meaning that there is a larger voltage drop across the internal resistance of the cell.

This can only happen if the internal resistance of the cell has been increased by moving the plates farther apart.

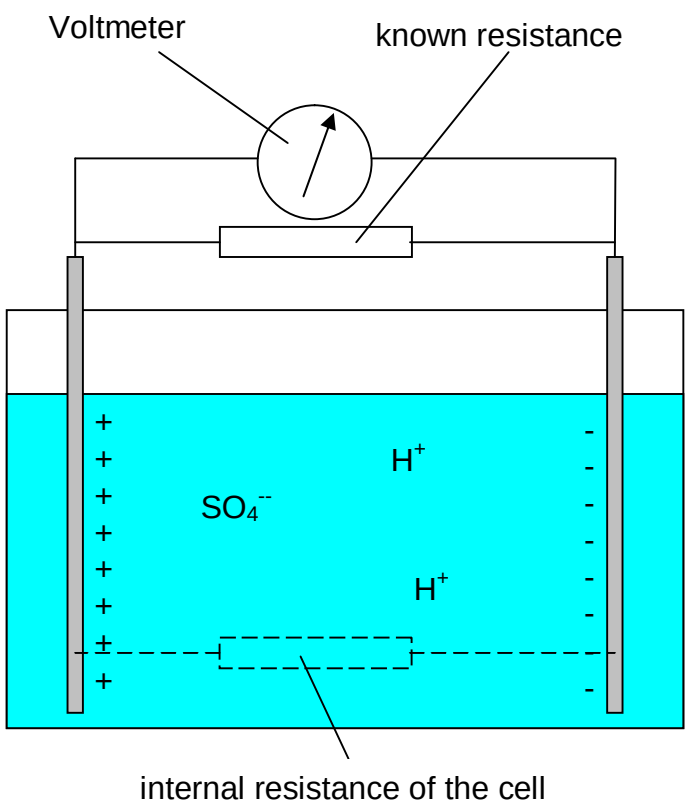

The larger plates cause a greater voltage drop across the known resistor (a smaller voltage drop across the internal resistance of the cell). Internal resistance decreased.
The smaller plates cause a smaller voltage drop across the known resistor (a larger voltage drop across the internal resistance of the cell). Internal resistance increased.
Moving the plates together increases the meter voltage. The internal resistance voltage was decreased (internal resistance decreased).
Moving the plates apart decreases the meter voltage. The internal resistance increased.

43.3 If the potential difference (voltage) between the terminals of a cell on open circuit is to be measured by means of a galvanometer, why must the galvanometer have a high resistance?

If the galvanometer has a low resistance, a large current will flow through it and through the cell, and a large voltage drop will be produced across the internal resistance of the cell. This voltage drop across the internal resistance of the cell reduces the voltage shown on the voltmeter, and falsifies the voltage produced by the cell when no current is flowing through the cell.

If the resistance of the voltmeter is 20,000 ohms, a *very small* current will flow through the voltmeter and the cell, and the voltage drop across the internal resistance of the cell will be very small. This very small voltage drop across the internal resistance of the cell will not be enough to affect the reading of the cell voltage on the voltmeter.

43.4 Why are steel wires used together with copper wires on overhead telephone lines?

The copper wires are not strong enough to withstand the forces pulling on them at their ends when they are hung between telephone poles. A steel cable is used to

withstand this force and to support the copper wires as they hang under the force of gravity.

43.5 A voltmeter which has a resistance of 2000 ohms is shunted across the terminals A and B of a wire which has a resistance of 1 ohm. What fraction of the total current flowing from A to B will be carried by the voltmeter?

Two resistances are in parallel to each other, the 2000 ohm resistance of the voltmeter and the 1 ohm resistance of the wire.

The voltage drop across the voltmeter and the wire will be the same.

$$V_{2000\Omega} = V_{1\Omega} \Rightarrow I_{Voltmeter} \times 2000\Omega = I_{shunt} \times 1\Omega \Rightarrow \frac{I_{Voltmeter}}{I_{shunt}} = \frac{1\Omega}{2000\Omega} = \frac{1}{2000}.$$

If 1 ampere flows through the voltmeter, then 2000 amperes must flow through the shunt. The total current is the sum of these two currents, or 2001 amperes.

Of the total current $\frac{1}{2001}$ flows through the voltmeter (0.05% of the total current).

Of the total current $\frac{2000}{2001}$ flows through the shunt (99.95% of the total current).

43.6 In a given circuit, the voltage across the terminals of a resistance of 19 ohms is found to be 3 volts. What is the voltage drop across the terminals of a 3 ohm wire in the same circuit?

If a 3 volt voltage drop occurred over a 19 ohm resistor at this point in the circuit, the current that is flowing in this part of the circuit is $I = \frac{E}{R} = \frac{3V}{19\Omega} = \frac{3}{19} ampere$.

If the 19 ohm resistor is replaced by a 3 ohm resistor, the voltage drop across the 3 ohm resistor will be $E = I \times R = \frac{3}{19} ampere \times \frac{3\Omega}{1} = \frac{9}{19} V = 0.473V$.

43.7 The resistance of a certain piece of German-silver wire is 1 ohm. What will be the resistance of another piece of the same length, but of twice the diameter?

If the diameter of the wire was doubled, then the radius of the wire was doubled.

The cross sectional area of the wire ($\pi \cdot r^2$) becomes four times as large ($\pi \times (2r)^2 = 4\pi \cdot r^2$).

If the cross-sectional area of the second wire is 4 times as large as the original wire, the resistance of the second wire is only ¼ that of the original wire, or ¼ ohm.

43.8 How much current will flow between two points whose voltage drop is 2 volts, if they are connected by a wire having a resistance of 12 ohms?

$$I = \frac{E}{R} = \frac{2V}{12\Omega} = \frac{1}{6} A.$$

43.9 What voltage exists between the ends of a wire whose resistance is 100 ohms when the wire is carrying a current of 0.3 ampere?

$E = I \times R = 0.3A \times 100\Omega = 30V$

43.10 If a voltmeter attached across the terminals of an incandescent lamp shows a voltage of 110 volts, while an ammeter connected in series with the lamp indicates a current of ½ ampere, what is the resistance of the incandescent filament?

$$R = \frac{E}{I} = \frac{110V}{\frac{1A}{2}} = 220\Omega .$$

43.11 A certain storage cell having an E.M.F. of 2 volts is found to furnish a current of 20 amperes through an ammeter whose resistance is 0.05 ohms. Find the internal resistance of the cell.

The voltage drop through the ammeter is $E = I \times R = 20A \times 0.05\Omega = 1V$.

The other 1volt of the 2 volts produced by the cell must have been dropped across the internal resistance of the cell. 20 amperes also flow through the internal resistance of the cell. $R_{CellInternal} = \frac{E_{CellInternal}}{I_{CellInternal}} = \frac{1V}{20A} = 0.05\Omega$.

43.12 The E.M.F. of a certain battery is 10 volts and the strength of the current obtained through an external resistance of 4 ohms is 1.25 amperes. What is the internal resistance of the battery?

The voltage drop across the external resistor is $E = I \times R = 1.25A \times 4\Omega = 5V$.

The other 5volt of the 10 volts produced by the battery must have been dropped across the internal resistance of the battery. 1.25 amperes also flows through the internal resistance of the battery. $R_{BatteryInternal} = \frac{E_{BatteryInternal}}{I_{BatteryInternal}} = \frac{5V}{1.25A} = 4\Omega$.

43.13 Consider the diameter of No. 20 wire to be three times that of No. 30 wire. A certain No. 30 wire 1 meter long has a resistance of 6 ohms. What would be the resistance of 4 meters of No. 20 wire made of the same metal?

If the diameter of the wire was tripled, then the radius of the wire was tripled.

The cross sectional area of the wire ($\pi \cdot r^2$) becomes nine times as large ($\pi \times (3r)^2 = 9\pi \cdot r^2$).

If the cross-sectional area of the No.20 wire is 9 times as large as the No. 30 wire, the resistance of the *same length* of No.20 wire is only 1/9 that of the No. 30 wire.

1 meter of No. 30 wire has a resistance of 6 ohms.

1 meter of No. 20 wire has a resistance of $\frac{6\Omega}{1} \times \frac{1}{9} = \frac{2}{3}\Omega$.

4 meters of No. 20 wire have a resistance of $\frac{2\Omega}{3} \times \frac{4}{1} = \frac{8}{3}\Omega = 2\frac{2}{3}\Omega$.

43.14 Three wires, each having a resistance of 15 ohms, were joined in parallel and a current of 3 amperes sent through them. How much was the E.M.F. of the current?

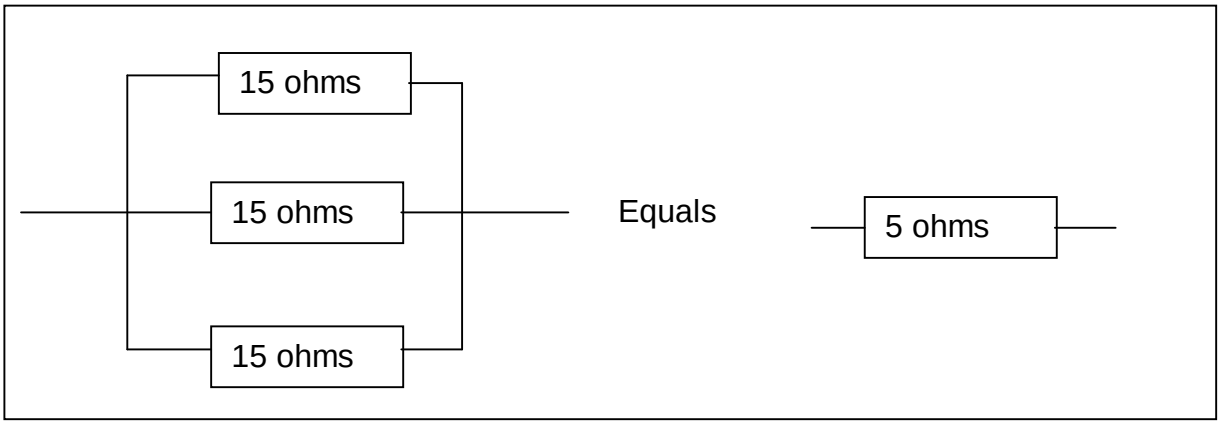

$$\frac{1}{R_{Total}} = \frac{1}{R_1} + \frac{1}{R_2} + \frac{1}{R_3} = \frac{1}{15\Omega} + \frac{1}{15\Omega} + \frac{1}{15\Omega} = \frac{3}{15\Omega} \Rightarrow \frac{R_{Total}}{1} = \frac{15\Omega}{3} = 5\Omega \text{ .}$$

The equivalent replacement resistor is 5 ohms. 3 amperes flow through this 5 ohm equivalent resistor.

$E = I \times R = 3A \times 5\Omega = 15V$.

44. PRIMARY CELLS

An *electrolyte* is a liquid which contains ions (acid or salt in a water solution).

A *primary cell* is formed by an electrolyte in which two dissimilar metal strips have been immersed. One of the metal strips will carry a – charge, and the other metal strip will carry a + charge. These metal strips act as electrical poles of the cell.

A primary cell can produce an electric current until one of its metal poles is consumed, or until the electrolyte solution in it becomes depleted.

A primary cell can not be recharged.

*The resistance of any conductor is directly proportional to its length, and inversely proportional to its cross-sectional area.

44.1 A certain dry cell having an E.M.F. of 1.5 volts delivered a current of 30 amperes through an ammeter having a negligible resistance. Find the internal resistance of the cell.

$$R_{\text{int}\,ernal} = \frac{E}{I} = \frac{1.5V}{30A} = 0.05\Omega.$$

44.2 Why is a Lecanche´ cell better than a Daniel cell for small current applications?

A Daniel cell has a high internal resistance (about 6 ohms) which greatly reduces the current it can supply. The Lecanche´ cell has an internal resistance of about 1 ohm.

A Daniel cell can produce a current of about 1 ampere. A Lecanche´ cell can produce a current of about 3 amperes.

The voltage drop over the internal resistance of the Daniel cell is 6 times higher than that of a Lecanche´ cell for the same circuit current flowing.

The Lecanche´ cell provides a more stable voltage when small currents flow, and it can provide a small current for a very long time, especially if the current does not flow continuously but only periodically.

44.3 Diagram three wires in series and three cells in series. If each wire has a resistance of 0.1 ohm, what is the internal resistance of the series?

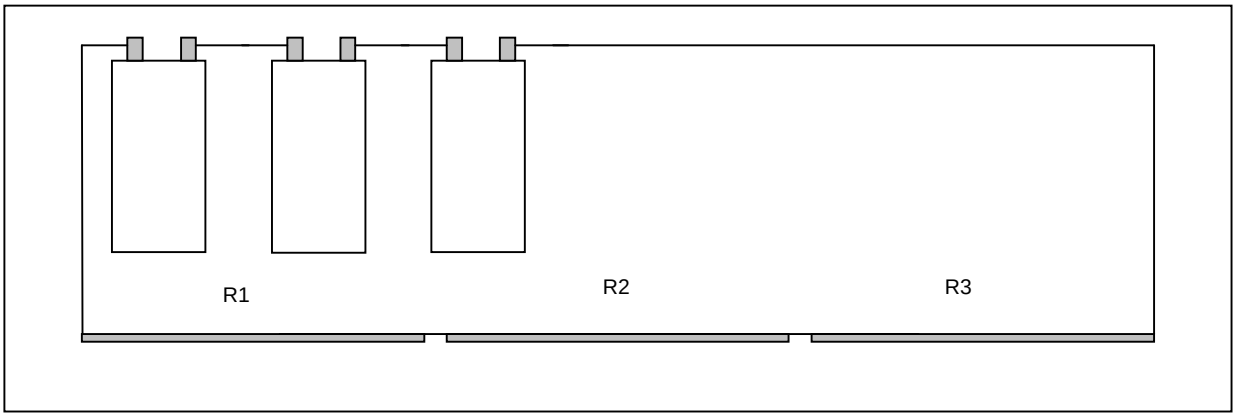

Each cell produces a voltage of E. The total voltage is 3 x E.

Each cell has an internal resistance of R_i. The total internal resistance is 3 x R_i.

The resistance of the three wires is $R_1 + R_2 + R_3$.

The total circuit resistance is $R_1 + R_2 + R_3 + 3 \times R_i$.

We measure the current flowing in the circuit (I).

$$R = \frac{E}{I} \Rightarrow \mathrm{R1} + \mathrm{R2} + \mathrm{R3} + 3 \text{ x Ri} = \frac{3\mathrm{E}}{\mathrm{I}} \Rightarrow 3R_i = \frac{3E}{I} - R_1 - R_2 - R_3 \Rightarrow R_i = \frac{\frac{3E}{I} - R_1 - R_2 - R_3}{3}.$$

44.4 Diagram three wires in parallel and three cells in parallel. If each wire has a 6 ohm resistance, what is the resistance of the three?

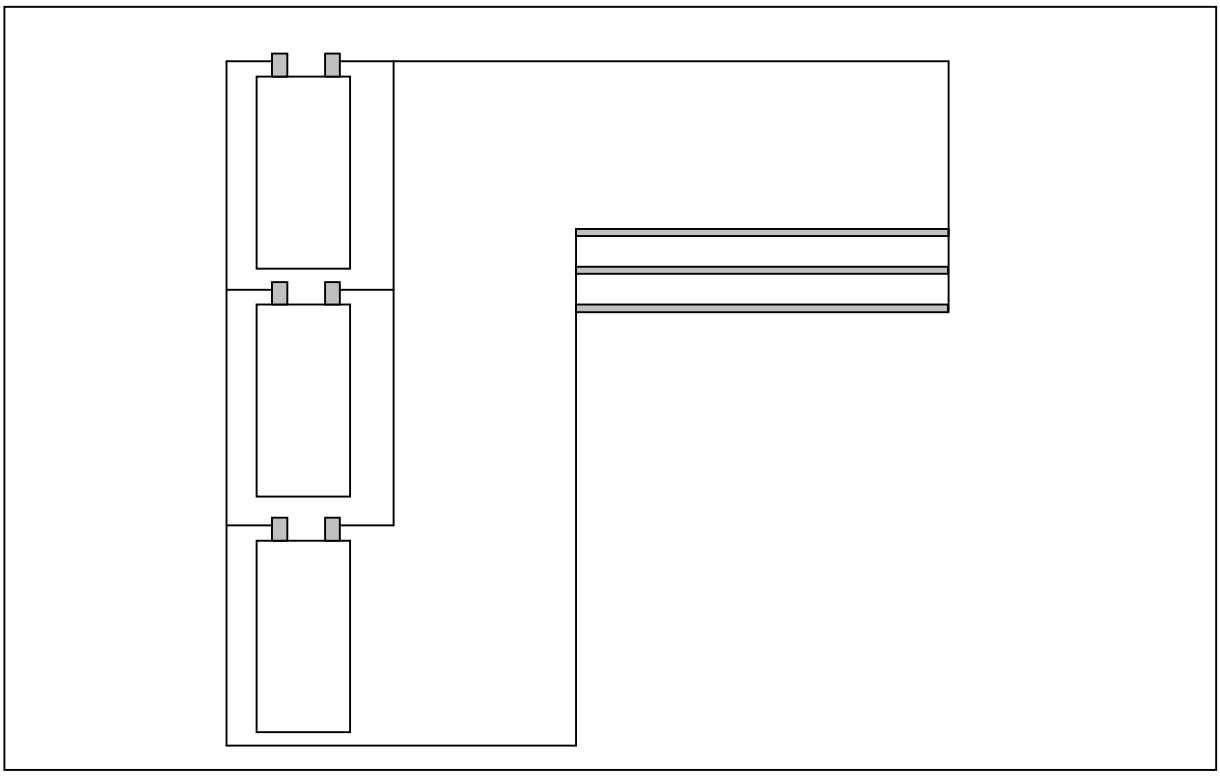

Each cell produces a voltage of E. The total voltage is E volts.

Each cell has an internal resistance of R_i. The total internal resistance is $\frac{R_i}{3}\Omega$.

Each wire has a resistance of $R\Omega$

The resistance of the three wires is $\frac{R}{3}\Omega$.

The total circuit resistance is $\frac{R_i}{3}+\frac{R}{3}\Omega$.

We measure the current flowing in the circuit (I amperes).

$$R=\frac{E}{I}\Rightarrow \frac{R_i+R}{3}=\frac{E}{I}\Rightarrow R_i+R=\frac{3E}{I}\Rightarrow R_i=\frac{3E}{I}-R.$$

44.5 Give a water analogy of cells in series.

The energy required to raise the water against the opposing force of gravity (analogous to the resistance in an electric circuit) must be greater than M x g x d. This energy causes a pressure at the bottom of the pipe it is in, and is stored as potential energy. The higher the pipe is, the more is the pressure at the bottom of the pipe.

The voltage of a cell is similar to this water pressure at the bottom of the pipe, because it acts as a pressure that causes electrons to flow. Several cells connected in series increase this pressure (increase the voltage).

When a valve is opened at the bottom of a water pipe, the water flows and operates a water wheel, a sprinkler, or some other hydraulic device.

When the switch is closed in an electric circuit, electrons flow and cause an electric device to operate (a light to burn or an electric motor to run).

When the water runs out of the pipe, the device it is operating stops working.

When the voltage of the cell can no longer be maintained, the electrons stop flowing, and the device they are operating stops working.

44.6 If the internal resistance of a Daniel cell of the gravity type is 4 ohms, and its E.M.F. is 1.08 volts, how much current will 40 cells in series send through a wire having a resistance of 500 ohms?

40 cells in series will produce 40 x 1.08 volts = 43.2volts.

40 cells in series will have an internal resistance of 40 x 4ohms = 160 ohms.

If a resistance of 500 ohms is connected to the 40 cells, a total *circuit resistance* of 500 ohms + 160 ohms (660 ohms) results.

The current that will flow in this circuit is $I_{circuit}=\frac{E_{Total}}{R_{Total}}=\frac{43.2V}{660\Omega}=0.065A=65mA$.

What current will be sent through the circuit if the Daniel cells are connected in parallel?

40 cells in parallel will produce 1.08 volts.

40 cells in series will have an internal resistance of $\frac{1}{R_{Total}}=\frac{1}{R_1}+\frac{1}{R_2}+.....\frac{1}{R_{40}}$.

$$\frac{1}{R_{Total}} = \frac{1}{4\Omega} \times 40 = \frac{10}{1\Omega} \Rightarrow R_{Total} = \frac{1\Omega}{10} = 0.1\Omega.$$

If a resistance of 500 ohms is connected to the 40 cells, a total *circuit resistance* of 500 ohms + 0.1 ohms (500.1 ohms) results.

The current that will flow in this circuit is $I_{circuit} = \frac{E_{Total}}{R_{Total}} = \frac{1.08V}{500.1\Omega} \cong 0.002A = 2mA$.

44.7 What current will the 40 cells in parallel send through an ammeter having a resistance of 0.1 ohm?

40 cells in parallel will produce 1.08 volts.

40 cells in parallel will have an internal resistance of $\frac{1}{R_{Total}} = \frac{1}{R_1} + \frac{1}{R_2} + ...\frac{1}{R_{40}}$.

$$\frac{1}{R_{Total}} = \frac{1}{4\Omega} \times 40 = \frac{10}{1\Omega} \Rightarrow R_{Total} = \frac{1\Omega}{10} = 0.1\Omega.$$

If a resistance of 0.1 ohms is connected to the 40 cells, a total *circuit resistance* of 0.1 ohms + 0.1 ohms results.

The current that will flow in this circuit is $I_{circuit} = \frac{E_{Total}}{R_{Total}} = \frac{1.08V}{0.2\Omega} = 5.4A$.

44.8 Under what conditions will a small cell give practically the same current as a large one of the same type?

When the external resistance in the circuit is very large compared with the internal resistance of the cell.

If the external resistance is low, a large current will flow, which can not be provided by one cell. Two or more of the same kind of cell must be connected in parallel to provide the larger current.

44.9 How many cells, each of E.M.F. 1.5 volts and internal resistance of 0.2 ohm will be needed to send a current of at least one ampere through an external resistance of 40 ohms?

We will have to connect the cells in series to cause a voltage drop of 40 volts across the 40 ohm external resistor. If the cells had no internal resistance, we would need 40 volts divided by 1.5 volts for each cell, or 26.6 cells, meaning at least 27 cells would be needed. The cells have an internal resistance, however, so we will need more than 27 cells to cause a 1 ampere current to flow in the circuit.

Let us call the number of cells that we need N.

The voltage of the circuit must then be N multiplied by 1.5 volts.

The internal resistance of the cells must then be N multiplied by 0.2 ohms.

The external resistance in the circuit is 40 ohms.

The total circuit resistance is the sum of the internal and external resistances.

The current flowing in the circuit is at least 1 ampere.

$E = I \times R \Rightarrow N \times 1.5V = 1A \times (40\Omega + 0.2X\Omega) = 40A\Omega + 0.2NA\Omega$.

$(1.5N - 0.2N)V = 40A\Omega \Rightarrow 1.3Nvolts = 40A\Omega \Rightarrow N = \frac{40V}{1.3V} = 30.76$.

We will need at least 31 cells.

44.10 Why is it desirable that a galvanometer which is to be used for measuring currents have as low a resistance as possible?

The voltage drop over the galvanometer must be kept as small as possible.

$E = I \times R$. Because we are measuring the current, I, which can be any current within the measuring range of the galvanometer, we only have the resistance that we can adjust.

If we are to keep the voltage drop over the galvanometer low, we must keep the internal resistance of the galvanometer low.

44.11 A certain No.9 wire has a resistance of 20 ohms to the mile. What current will 100 Daniel cells in series, each of E.M.F. 1 volt, send through 100 miles of such wire, if two relays are in the wire at different locations, each having a resistance of 150 ohms, and each Daniel cell has an internal resistance of 4 ohms?

The total internal resistance in the circuit is 100 x 4 ohms, or 400 ohms.

The total external resistance in the circuit is 100 x 20 ohms, or 2000 ohms.

The resistance of the two relays is 2 x 150, or 300 ohms.

The total circuit resistance is the internal + the external + the relay resistance, or 2700 ohms.

The total voltage available is 100 x 1 volt, or 100 volts.

A current of $I = \frac{E}{R} = \frac{100V}{2700\Omega} = 0.037A = 37mA$ will flow through the circuit.

44.12 If the relays described in problem 43.11 had each 10,000 turns of wire in their coils, how many ampere-turns were effective in magnetizing their electromagnets?

$10{,}000turns \times 0.037A = 370ampere - turns$.

44.13 If, in problem 44.11 the relays had a resistance of 3 ohms each and 500 turns of wire, how many ampere-turns would be effective in magnetizing their cores?

The total internal resistance in the circuit is 100 x 4 ohms, or 400 ohms.

The total external resistance in the circuit is 100 x 20 ohms, or 2000 ohms.

The resistance of the two relays is 2 x 3 ohms, or 6 ohms.

The total circuit resistance is the internal + the external + the relay resistance, or 2406 ohms.

The total voltage available is 100 x 1 volt, or 100 volts.

A current of $I = \frac{E}{R} = \frac{100V}{2406\Omega} = 0.041A = 41mA$ will flow through the circuit.

$500 turns \times 0.041 A = 20.78 ampere - turns$.

Why does the electromagnet of the relay have a high resistance?

*** The resistance of any conductor is directly proportional to its length and inversely proportional to its cross-sectional area. Fine wire (small diameter wire) with a long length (many turns) has a high resistance.**

45. SECONDARY CELLS

A secondary cell is a primary cell that can be recharged.

Secondary cells are called *Accumulators*.

There are several kinds of accumulators: lead-acid batteries, nickel cadmium batteries, metal hydride batteries, lithium ion batteries, etc.

As an example the lead-acid battery will be described. This type of accumulator is used in almost all cars and trucks.

The following picture shows a lead-acid battery when it is fully charged.

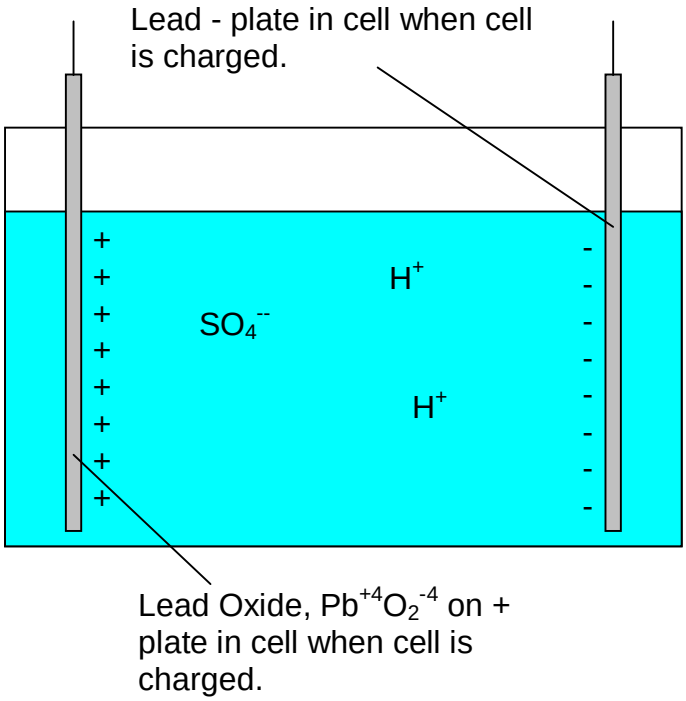

The plates of a lead-acid battery are all made of lead.

When the battery is charged, the - plate is grey lead and the + plate has a coating of dark brown lead oxide on it, $Pb^{+4}O_2^{-4}$.

The electrolyte in which these plates are immersed is a weak solution of sulfuric acid, $H_2^{++}SO_4^{--}$.

The sulfuric acid has dissociated into H^+ ions and SO_4^{--} ions which can move freely in the electrolyte.

The next picture shows a lead-acid battery when it is being used to operate some electric device.

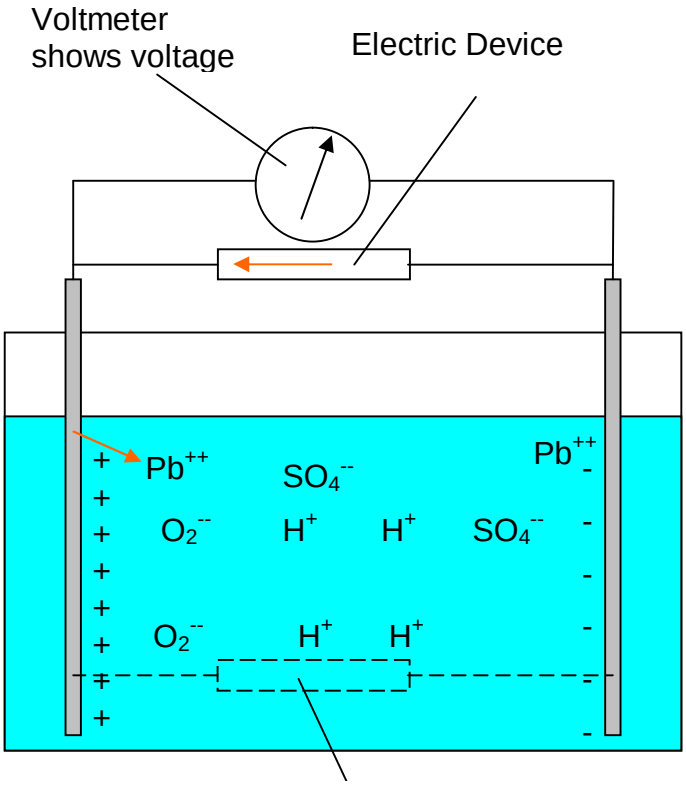

When the battery is discharging (powering lights, electric motors and other electric devices) chemical actions begin to occur in the cell.

Electrons flow as shown by the red arrows.

Two electrons leave the minus pole and leave a positively charged lead atom, Pb^{++}, behind on the minus plate.

When these two electrons from the – pole reach the + pole, one $Pb^{+4}O_2^{-4}$ atom accepts the two electrons and goes into solution in the electrolyte. The $Pb^{+4}O_2^{-4}$ atom changes into Pb^{++} + O^{--} + O^{--} ions. This is the situation near the + plate as shown in the picture.

The two electrons that arrived at the + plate have now been removed from the + plate and have entered the electrolyte.

Notice that the electrons flow from the negative plate of the battery through the electrical device to the positive plate of the battery, and then into the electrolyte.

***The electrons do not return to the negative plate of the battery through the electrolyte.**

The battery is discharging.

The two Pb^{++} lead ions, one at each plate, combine with sulfate ions to form lead sulphate molecules.

The two oxygen ions combine with the four hydrogen ions to form two water molecules.

This process continues until the electrons on the negative plate of the accumulator have been depleted. When this happens, we say that the battery is “dead”.

This situation is shown in the following picture.

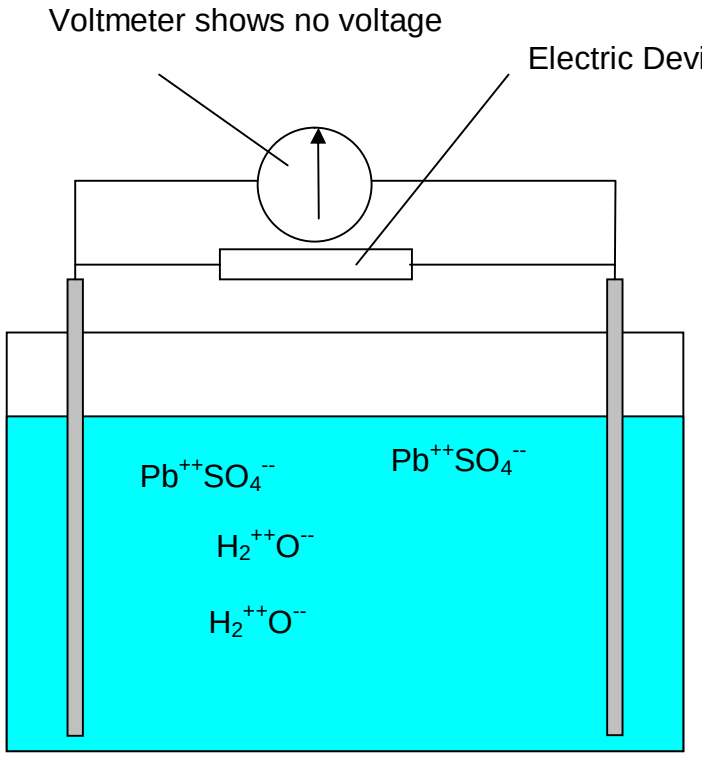

The two Pb^{++} lead ions, one at each plate, combine with sulfate ions to form lead sulphate molecules.

The two oxygen ions combine with the four hydrogen ions to form two water molecules.

This process continues until the electrons on the negative plate of the accumulator have been depleted. When this happens, we say that the battery is "dead".

45.1 When charging a storage battery is it better to say that the current passes *into* the cell or *through* it?

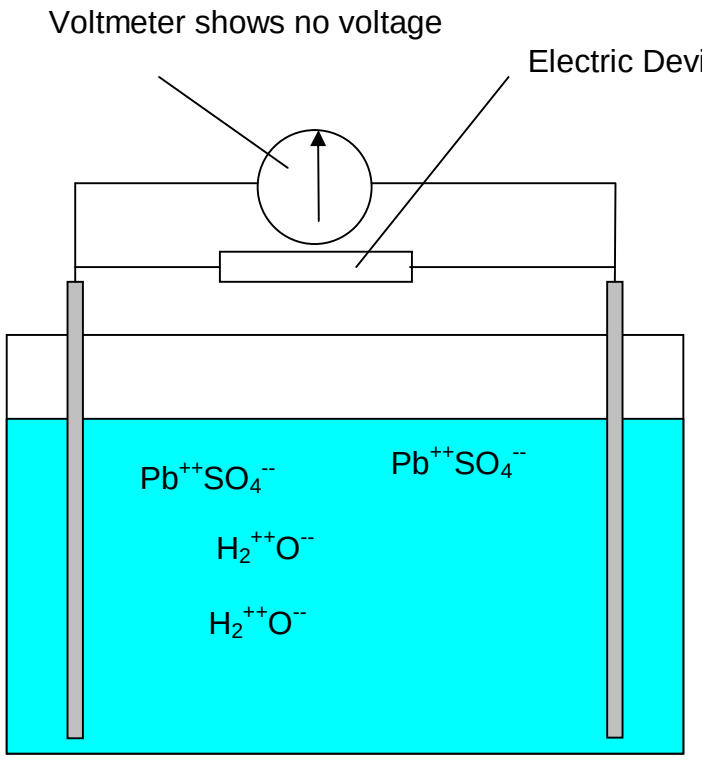

The electrolyte is as shown in the picture when a battery is dead. The battery is full of lead sulfate. This is what is meant by a "sulfated" battery.

Now we connect a battery charger to the battery.

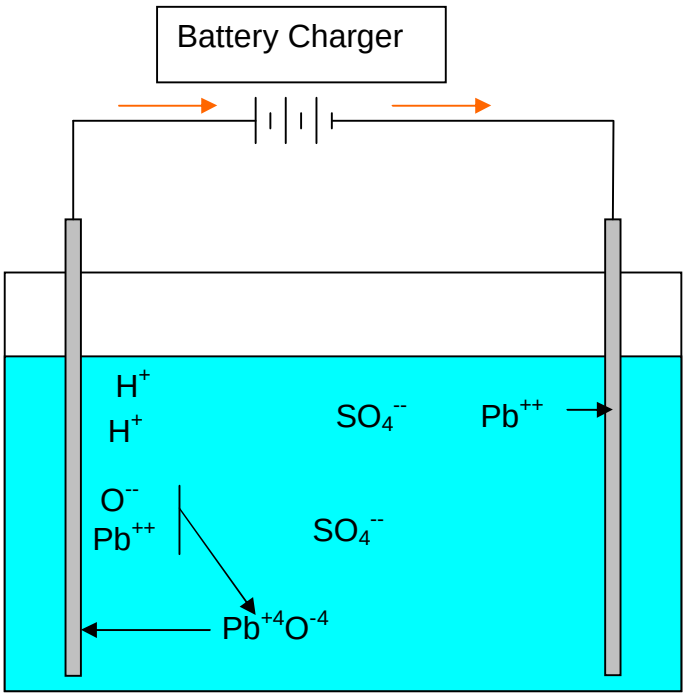

The battery charger places electrons on the minus plate (electron flow shown in red).

The lead in the $PbSO_4$ near the – plate is draw in contact with the plate where it receives 2 electrons, changing the lead ion to neutral metal and binding it with the lead metal in the – plate. This releases sulfate ions into the electrolyte.

The positive charge on the + plate attracts the oxygen end of the water molecules and separates the oxygen from them, releasing hydrogen ions into the electrolyte.

The positive charge from the battery charger removes two electrons from a lead atom in the metal, leaving lead ions near the + plate. The lead ions combine with the oxygen ions there to form lead oxide molecules that cover the outside of the + plate.

This process continues until the electrical charge on the negative plate of the accumulator has been returned to its original concentration. The battery has been charged.

We see that no electrons were moved through the electrolyte in the cell.

***The electrons do not return to the positive plate of the battery through the electrolyte when charging the battery.**

It is better to say that electrons flowed into the cell, but not through the cell, when the cell was being charged.

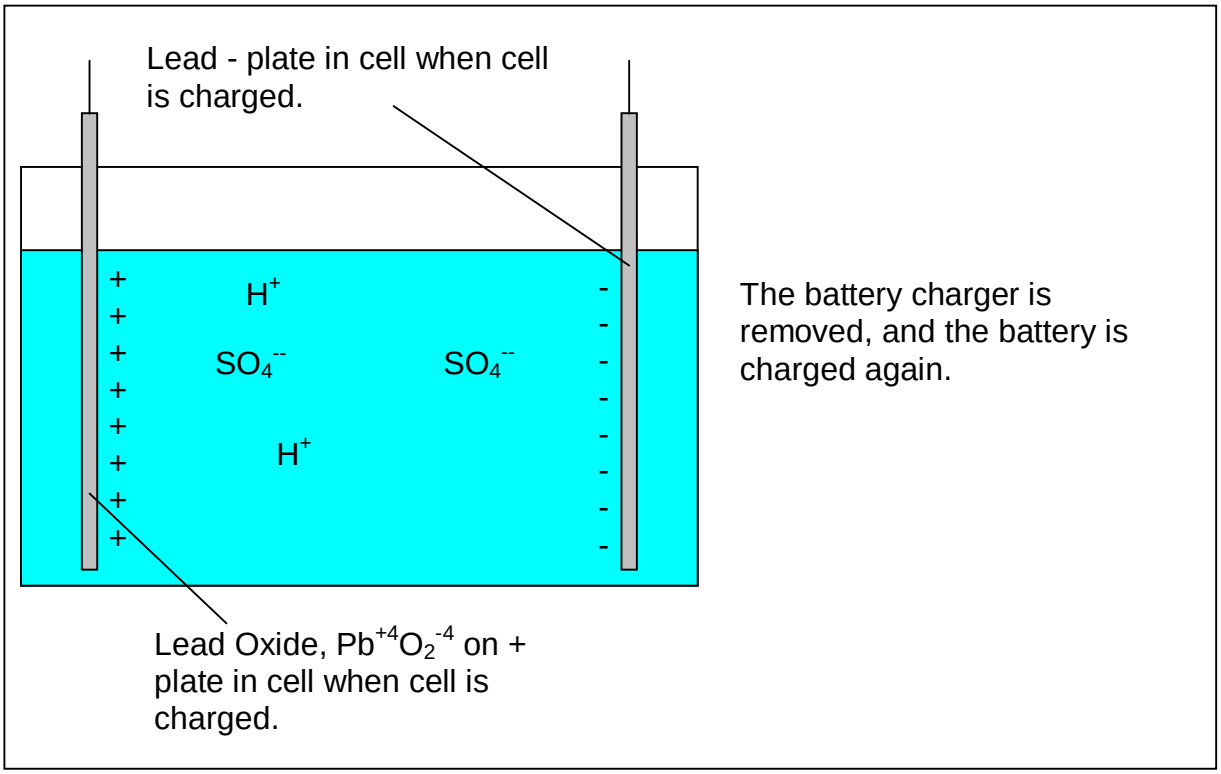

45.2 What is the relation of the charging current to the positive plate of the battery?

Electrons flow away from the positive plate of the battery and toward the negative plate of the battery, which is exactly opposite to what happens in nature. This is a “forced” current flow produced by the battery charger.

46. HEATING EFFECTS

Since one calorie is equal to 42 x 10^6 ergs

1 watt is10 x 10^6 ergs per second

1 watt develops 0.24 calories in one second.

Therefore, the number of calories, H, developed in t seconds by a current of I amperes between two points between which there is an E.M.F. of V volts is expressed by the equation:

$H = I \times E \times t \times 0.24$.

46.1 What is meant by a 100 Volt lamp?

The lamp should only be connected to a 100 volt electrical network.

What would happen to such a lamp if it were connected to 500 volts?

The heat developed in the filament of the lamp is equal to I^2R.

The current flowing in the filament at 100V is $I = \frac{E}{R} = \frac{100}{R}$.

The current flowing in the filament at 500V is $I = \frac{E}{R} = \frac{500}{R}$.

The current flowing in the 500V network is $\frac{500}{R} \div \frac{100}{R} = \frac{500}{R} \times \frac{R}{100} = 5$ times as much as in the 100V network.

The heat produced in the 500V network is $(5I)^2R = 25I^2R$. The heat produced in the lamp is 25 times higher in the 500V network than in the 100V network.

The lamp would burn very brightly a short while and then burn out.

46.2 A very common electric lamp used in homes is marked 25 watts and uses approximately 0.25 amperes. One fresh dry cell on short circuit will deliver 30 or more amperes. Will the cell light the lamp?

$R_{lamp} = \frac{E}{I} = \frac{110V}{0.25A} = 440\Omega$. We will consider the internal resistance of the cell to be 0.

The voltage of the cell is 1.5V. The current flowing through the lamp when it is connected to the cell is $I_{cell} = \frac{1.5V}{440\Omega} = 0.0034A$.

The heat developed in the filament of the lamp in one second is $I^2{}_{cell}R_{lamp} \times t \times 0.24 = (0.0034A)^2 \times 440\Omega \times t \times 0.24 = 0.0012 calorie$. This is not enough heat to cause the lamp to glow.

46.3 A 50 volt carbon lamp carrying 1 ampere has about the same candlepower as a 100 volt carbon lamp carrying 0.5 ampere. Explain.

The power of the 50 volt carbon lamp is $P = I \times E = 1A \times 50V = 50VA = 50Watts$.

The power of the 100 volt carbon lamp is $P = I \times E = 0.5A \times 100V = 50VA = 50Watts$.

Both lamps develop the same power, and will have the same candlepower of light.

46.4 If a storage cell has an E.M.F. of 2 volts and furnishes a current of 5 amperes, what is its rate of energy expenditure in watts?

$P = I \times E = 5A \times 2V = 10VA = 10Watts$.

46.5 The picture shows two switches connected to a lamp L, which can be turned on or off at either switch, A or B.

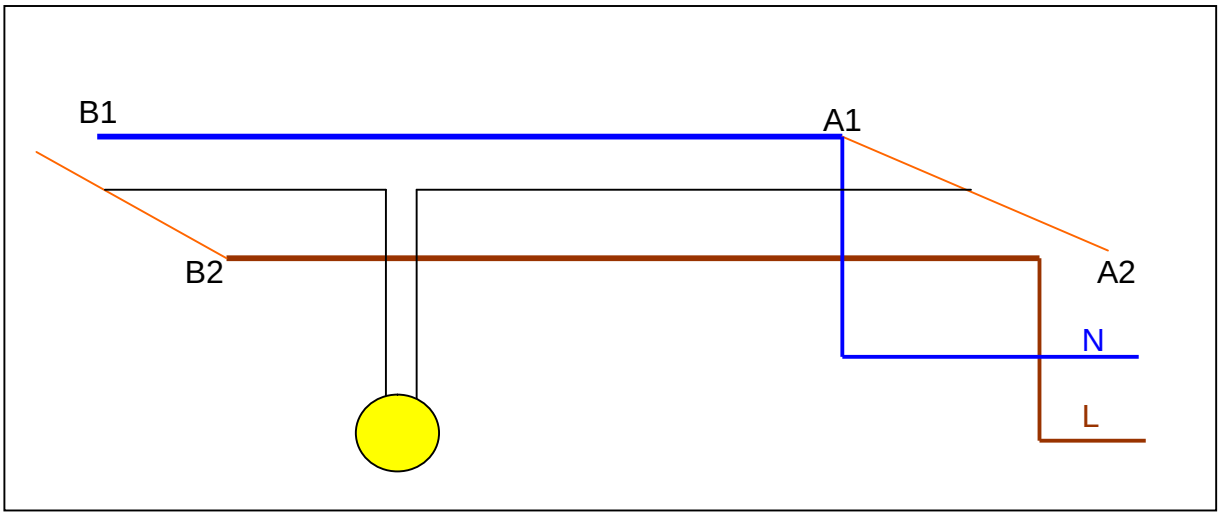

The lamp is on. If switch A is changed, the light goes out (both lines to the light are connected to the L-line) as shown in the following picture.

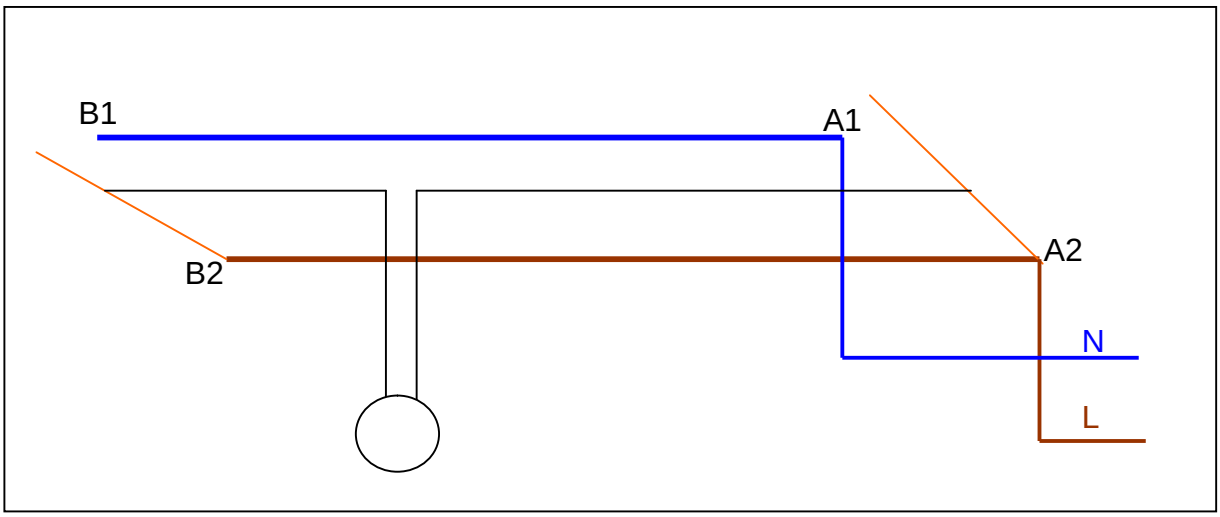

If switch A or switch B is now changed, the light will go back on. We will change switch B, and the light goes on.

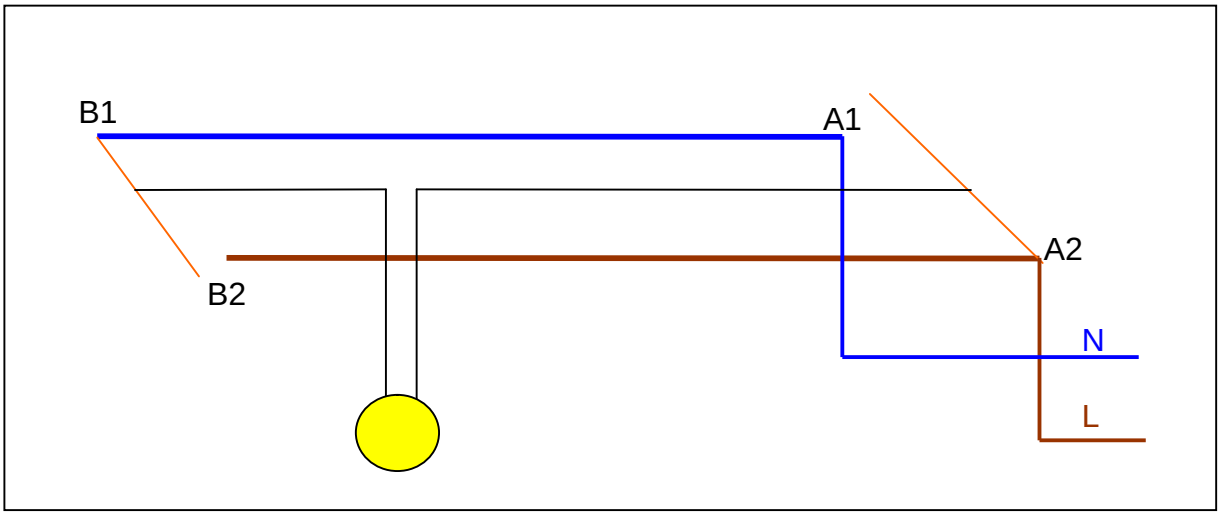

If switch A is changed again, the light goes out (both lines to the light are connected to the N-line), as shown in the following picture.

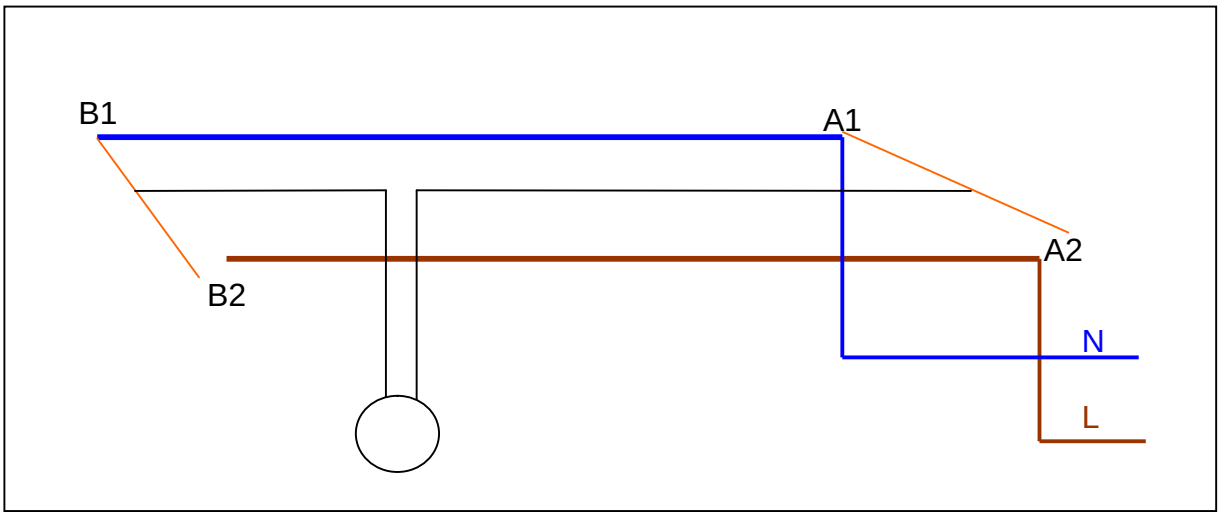

If switch A or switch B is now changed, the light will go back on.

46.6 How many 100 volt lamps each carrying 0.25 ampere can be maintained on a circuit where the total power may not exceed 600 watts?

The power consumption of one lamp is $P = I \times E = 0.25A \times 100V = 25VA = 25Watts$.

600 watts are available. $\frac{600W}{1} \times \frac{1lamp}{25W} = 24lamps$.

46.7 What will it cost to use an electric laundry iron for 6 hours if it uses 3.5 amperes on a 110 volt circuit, the cost of current being 20 cent per kilowatt hour?

The power consumption of the iron is $P = I \times E = 3.5A \times 110V = 385VA = 385Watts$ =0.385kilowatt.

In 6 hours the iron will use $6hours \times 0.385Kw = 2.31kilowatt - hours$.

The cost of operating the iron for 6 hours is $\frac{2.31Kw - h}{1} \times \frac{20cent}{1Kw - h} = 46.2cent$.

46.8 A certain electric toaster takes 5 amperes at 110 volts. It will make two pieces of toast in 3 minutes. At what horsepower does the toaster convert electrical energy into heat energy?

$$P = I \times E = 5A \times 110V = 550VA = 550Watts \Rightarrow \frac{550W}{1} \times \frac{1HP}{746W} = 0.74HP .$$

At 20 cents per kilowatt-hour, how much does it cost to make 12 pieces of toast?

$$\frac{0.550Kw}{1} \times \frac{3\min}{2toast} \times \frac{1h}{60\min} \times \frac{12toast}{1} \times \frac{20cent}{1Kw-h} = 3.3cent .$$

46.9 How many lamps, each of resistance 20 ohms and requiring a current of 0.8 ampere can be lighted by a dynamo that has an output of 4000 watts?

The power required by one lamp is
$P = I \times E = I \times (IR) = I^2R = (0.8A)^2 \times 20\Omega = VA = 12.8Watts$.

4000 watts of power are available.

$$\frac{4000W}{1} \times \frac{1lamp}{12.8W} = 312.2lamps \Rightarrow 312lamps .$$

46.10 If one of the wire loops in a tungsten lamp is short-circuited, what effect will this have on the amount of current flowing through the lamp?

The two wires in the lamp are connected in parallel. If they both have the same resistance, the resistance of the parallel combination is only half of the resistance of one of the wires alone.

$$\frac{1}{R_{//}} = \frac{1}{R} + \frac{1}{R} = \frac{2}{R} \Rightarrow R_{//} = \frac{R}{2} .$$

The voltage of the lamp must be equal to $\frac{R}{2} \times I$.

If one of the wires is short circuited, or burns out, there is only one wire left with its resistance, R. This resistance is twice the resistance of the parallel combination $\frac{R}{2}$.

Since the resistance has doubled, the current must be reduced by half to maintain the voltage $E = \left[\frac{R}{2} \times 2\right] \times \frac{I}{2} = \frac{R}{2} \times I$.

46.11How many cells of 2 volts furnishing 5 amperes are capable of furnishing one horsepower?

The power of one cell is $P = I \times E = 5A \times 2V = 10W$.

One horsepower is equal to746 watts.

$$\frac{1cell}{10W} \times \frac{746W}{1} = 74.6cells \Rightarrow 75cells .$$

46.12 How many calories per minute are given out by an electric toaster of 110 volts and 5 amperes?

Since one calorie is equal to 42 x 10^6 ergs, 1 watt (10 x 10^6 ergs) per second develops in one second 0.24 calories. Therefore, the number of calories, H, developed in t seconds by a current of I amperes between two points between which there is an E.M.F. of E volts is expressed by the equation $H = I \times E \times t \times 0.24$.

$H = 5A \times 110V \times 60s \times 0.24 = 7{,}920 calories.$

46.13 Show that the equation in problem 46.12, can be re-written as H = I² x R x t x 0.24.

$H = I \times E \times t \times 0.24$. We replace E in the formula with its equivalent. E = I x R.

$H = I \times IR \times t \times 0.24 \Rightarrow H = I^2 R \times t \times 0.24$.

46.14 How many minutes are required to heat 600 grams of water from 15°C to 100°C by passing 5 amperes through a 20 ohm coil immersed in the water?

The voltage used to heat the coil is $I \times R = 5A \times 20\Omega = 100V$.

$\frac{1 calory}{\frac{1 gm_{water}}{1°C}} \times 600 gm_{water} \times 85°C = 51{,}000 calories$ are required to heat the water.

The coil produces $P = I \times E = 5A \times 100V = 500W$ of energy

$H = I \times E \times t \times 0.24$ calories. $51{,}000 calories = 500W \times t\_seconds \times 0.24$.

$$t_{seconds} = \frac{51000 calories}{500W \times 0.24 \frac{calories}{Ws}} = 425s \times \frac{1 \min}{60s} \cong 7 \min .$$

46.15 Why is it possible to get a much larger current from a storage cell than a Daniel cell?

The number of plates forming one pole of a storage cell can be increased. It is the surface area of the plates where the electrons gather (minus pole) or are removed by chemical action (plus pole). The Daniel cell can not be expanded in this manner.

46.16 If an automobile is equipped with 12 volt lights, how many lead-acid storage cells are required in the car battery?

Each lead-acid storage cell produces 2 volts.

The automobile electric system operates on 12 volts.

$$\frac{12V}{AutomobileBattery} \times \frac{1 cell}{2V} = \frac{6 cells}{AutomobileBattery}.$$

46.17 A small arc lamp requires a current of 5 amperes and an E.M.F. between its terminals of 45 volts. What resistance must be used in series with it to use it in a 220 volt circuit?

220 volts are available. 45 of them will be dropped over the arc lamp when a current of 5 amperes is flowing in the circuit, leaving 220-45 volts, or 175volts, to be dropped over the external resistor when 5 amperes are flowing in the system.

E = 175V

I = 5A

$$R = \frac{E}{I} = \frac{175V}{5A} = 35\Omega .$$

The power of this resistor must be I^2R, or $25A^2$ x 35 ohms = 875 watts.

$H = I \times V \times t \times 0.24$ calories.

In one second this resistor will receive 875VA x 1s x 0.24 = 210 calories, and in ten seconds 2,100 calories. The resistor will become hot very fast. It could be made of metal that can be air-cooled. It could also be made of several smaller resistors in series that can somehow be cooled.

47. INDUCED CURRENTS

If 100,000,000 magnetic lines of force cut through a conductor in a time span of one second, one volt of E.M.F. will be induced in the conductor.

100,000,000 = 10^8.

Mathematically, we can express this fact as follows:

$$\frac{10^8\,lines}{\frac{1s}{1V}} \times \frac{1}{\frac{V}{\frac{1}{V}}} = \frac{10^8\,lines}{\frac{1sV}{1}} = \frac{10^8\,lines}{1s \times 1V} = \frac{10^8\,lines}{Vs}.$$

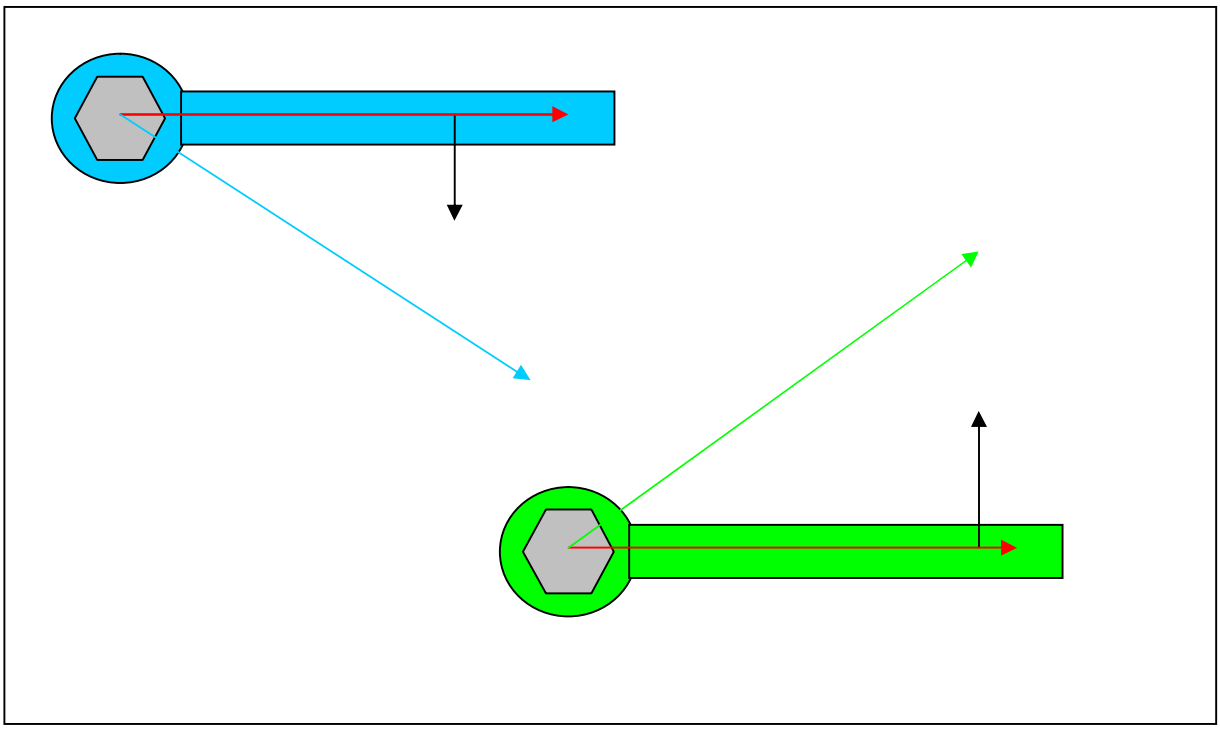

If we move the handle of the blue wrench toward the blue line, the bolt (shown in grey) will move downward.

If we move the handle of the green wrench toward the green line, the bolt (shown in grey) will move upward.

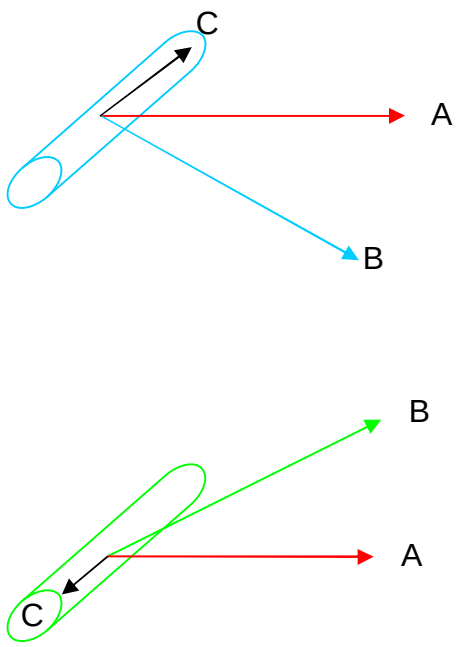

Mathematically, we say:
A cross B equals C.

In math we write $A \otimes B = C$.

This means that we rotate arrow A toward arrow B, and this determines which direction arrow C will have.

Think of arrow A as the wrench moving toward arrow B. The direction of arrow C is the direction the grey bolt would move.

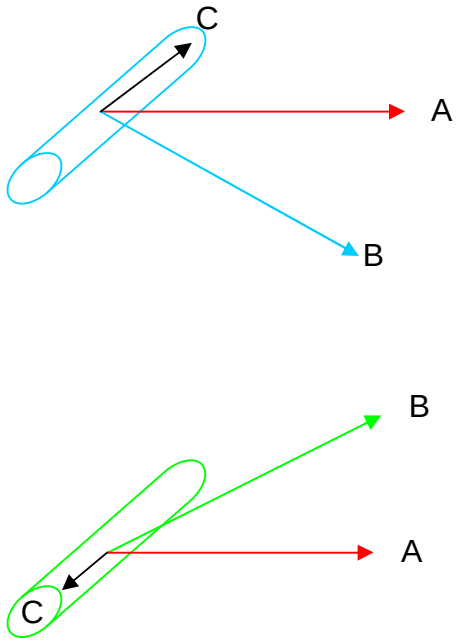

The red arrow is the direction of the magnetic field.

The blue arrow is the direction the blue conductor is moving.

The green arrow is the direction the green conductor is moving.

The black arrow is the direction in which electrons will be forced in the conductors.

47.1 Can the number of lines of force within a closed coil of wire increase or decrease without the lines cutting through the wire?

No, because to decrease the number of lines of force, lines must move from inside the coil to outside of the coil.

To increase the number of lines of force, lines must move from outside the coil to inside of the coil.

Both actions require lines to cut through the wire.

47.2 Under what conditions can a magnet produce an electric current?

A relative motion between the magnetic lines of force and a conductor must occur, whereby magnetic lines of force move through the conductor.

47.3 How many lines of force must be cut each second to induce 10 volts?

$$\frac{10^8\,lines}{1s \times 1V} \times \frac{10V}{1} = 10^9\,\frac{lines}{s}.$$

47.4 If a coil of wire is rotated about a vertical axis in the earth's magnetic field, an alternating current is set up in it. In what position is the coil when the current *changes direction*?

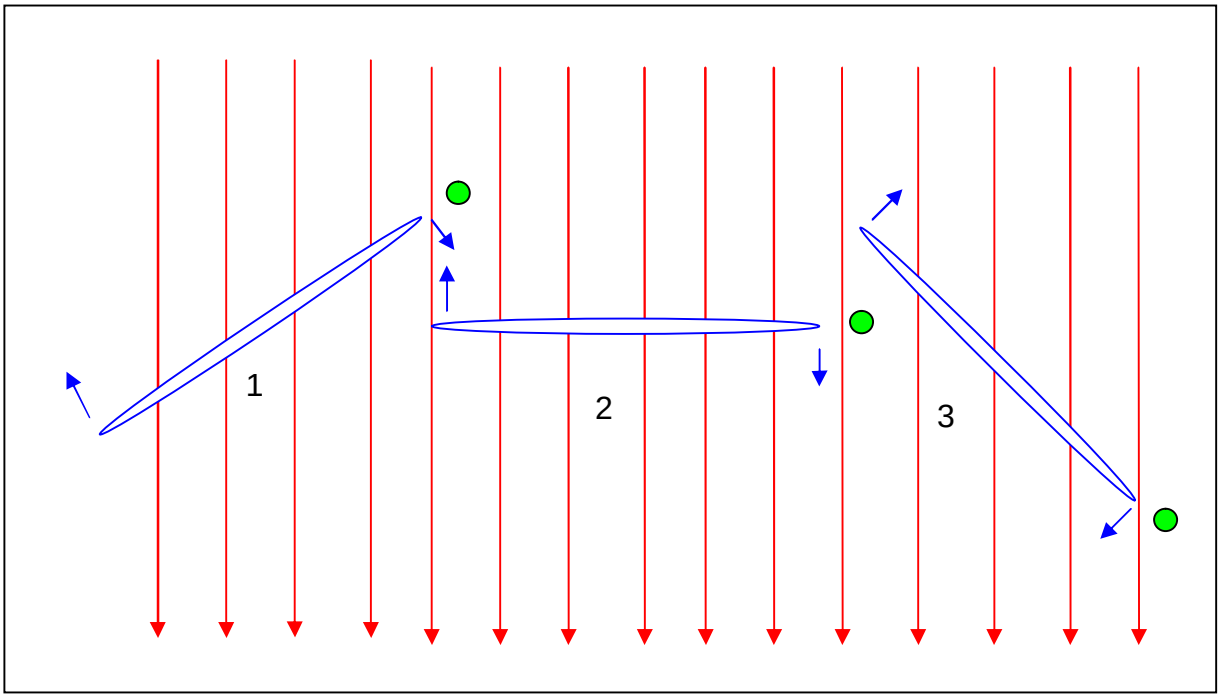

Imagine that you are an angel sitting on a cloud, looking down at the earth. You see the above picture, and you can see the earth's magnetic lines of force. Think of the earth´ s magnetic field, flowing from north to south as red arrows as shown in the picture (there are many of them between each two red arrows that can not be drawn in the picture.

The coil of wire is shown as a thin blue oval. Follow the green dot as the coil turns in the earth's magnetic field.

At position 1 in the picture the coil near the green dot is cutting magnetic lines of force moving *from left to right*. The magnetic field crossed with the conductor motion at this location shows that electrons are moving toward the reader.

At position 2 the coil near the green dot is cutting no magnetic lines of force, because the part of the coil near the green dot is moving parallel to the magnetic lines of force.

At position 3 the coil near the green dot is cutting magnetic lines of force *from right to left.* The magnetic field crossed with the conductor motion at this location shows that electrons are moving away from the reader.

The change in direction of the induced current occurred at position 2, when the plane of the coil is perpendicular (at a 90° angle) to the earth's magnetic lines of force.

47.5 State Lenz's law, and show how it follows from the principle of conservation of energy.

***LENZ'S LAW: Whenever a current is induced by the relative motion between a magnetic field and a conductor, the direction of the induced current is always such as to set up a magnetic field that opposes the *motion of the conductor*.**

***CONSERVATION OF ENERGY: An electric current possesses energy {measured in coulomb volts, the number of electrons (coulomb) moving in the conductor multiplied by the pressure causing them to flow (volts)}. This energy can only be created by the expenditure of work, or by the consumption of some other form of energy.**

47.6 A coil is thrust over the S pole of a magnet. Is the direction of the induced current clockwise or counterclockwise as you look down upon the pole?

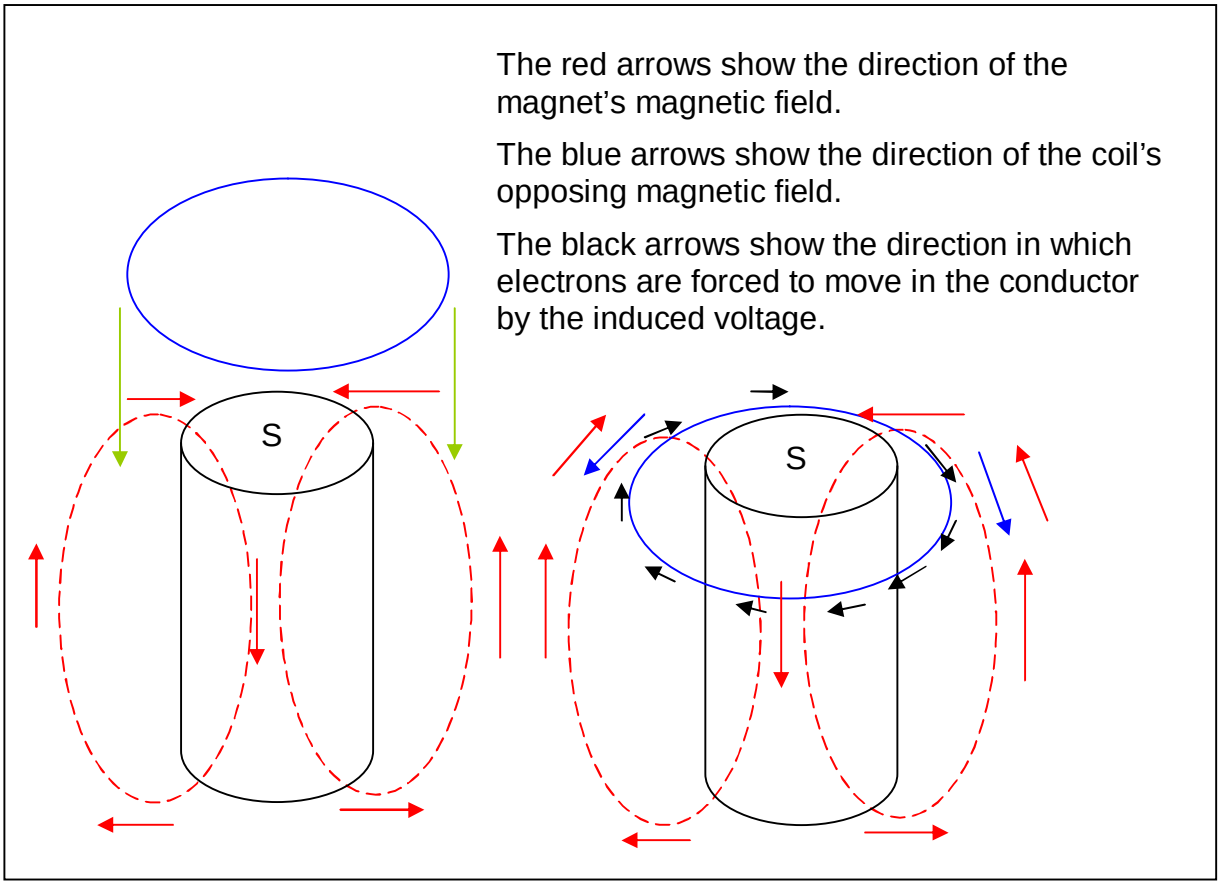

The coil is pushed downward (green arrows). According to Lenz's law, the *induced current* in the coil will set up a magnetic field that opposes this motion. This means that the lower side of the coil must have an S pole caused by the current induced in the coil. The top side of the coil must therefore have an N pole caused by the induced current flow in the coil.

If the thumb of the left hand points in the direction of electron flow, the curved fingers point in the direction of the magnetic field; from north to south. If the thumb of the left hand points in a clockwise direction, the bottom of the coil will be a South Pole and the top of the coil will be a North Pole.

The induced electron flow in the coil will be clockwise as seen from above.

47.7 A ship having an iron mast is sailing eastward. In what direction is the E.M.F. induced in the mast by the earth's magnetic field?

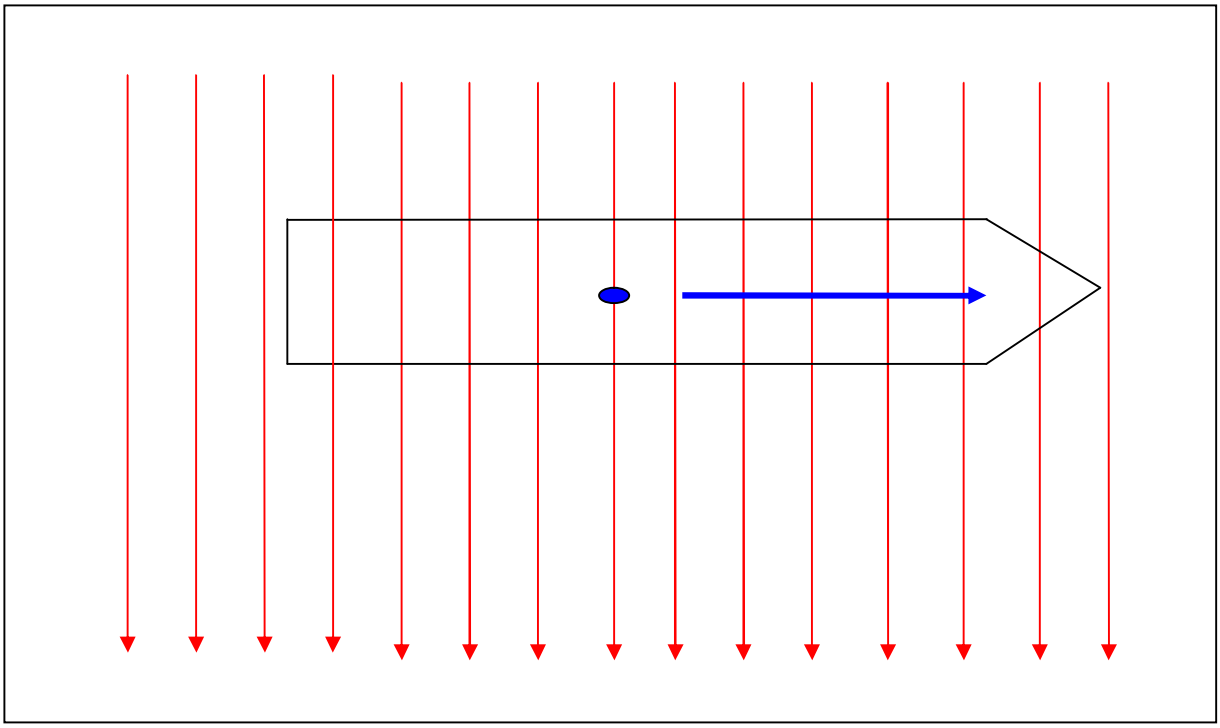

The earth's magnetic field is shown in red. The movement of the mast is shown in blue. The magnetic lines of force crossed with the motion of the conductor show that the electrons in the mast must move toward us, or upward toward the top of the mast.

47.8 Electrons are flowing from bottom to top in a vertical wire. In what direction will the wire tend to move on account of the earth's magnetic field?

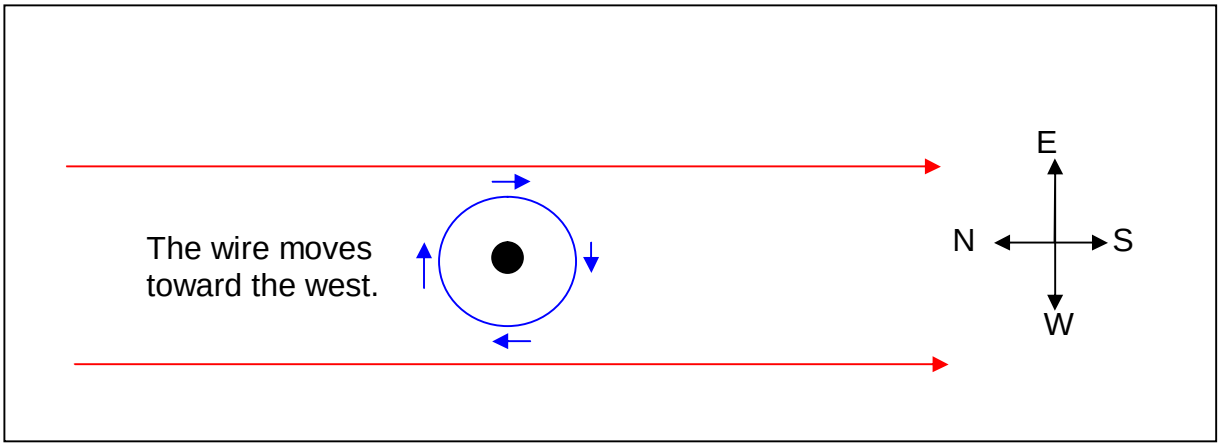

We are looking down upon the earth, as though we were flying in an airplane.

The magnetic field of the earth is shown in red, from north to south.

The electrons are flowing from bottom to top of the wire. We are looking at the top end of the wire (black dot). The electrons are flowing toward us. The magnetic field around the wire and its direction are shown in blue.

The magnetic field of the wire east of the wire is trying to establish itself inside of the earth's magnetic field, which has the *same direction*; this *strengthens* the earth's magnetic field east of the wire. The magnetic field redistributes itself above the wire immediately so that its strength becomes equal everywhere. This redistribution of the combined magnetic field east of the wire *pushes* the wire westward.

The magnetic field of the wire below the wire is trying to establish itself inside of the earth's magnetic field, and has a *direction opposite* to the direction of the earth's magnetic field; this *weakens* the earth's magnetic field west of the wire. The magnetic field redistributes itself below the wire immediately to become equal everywhere. This redistribution of the magnetic field west of the wire *pulls* the wire westward.

These two effects, the combined fields pushing the wire from the east and pulling the wire from the west, force the wire to move westward.

***Understanding these actions is very important to us, if we are going to understand how dynamos (electrical generators) and electric motors operate.**

48. DYNAMOS AND MOTORS

A **dynamo** is a machine that changes mechanical energy into electrical energy. There are direct current dynamos and alternating current dynamos.

An **electric motor** is a machine that changes electrical energy into mechanical energy.

48.1 What is the function (use) of the field magnet of a dynamo?

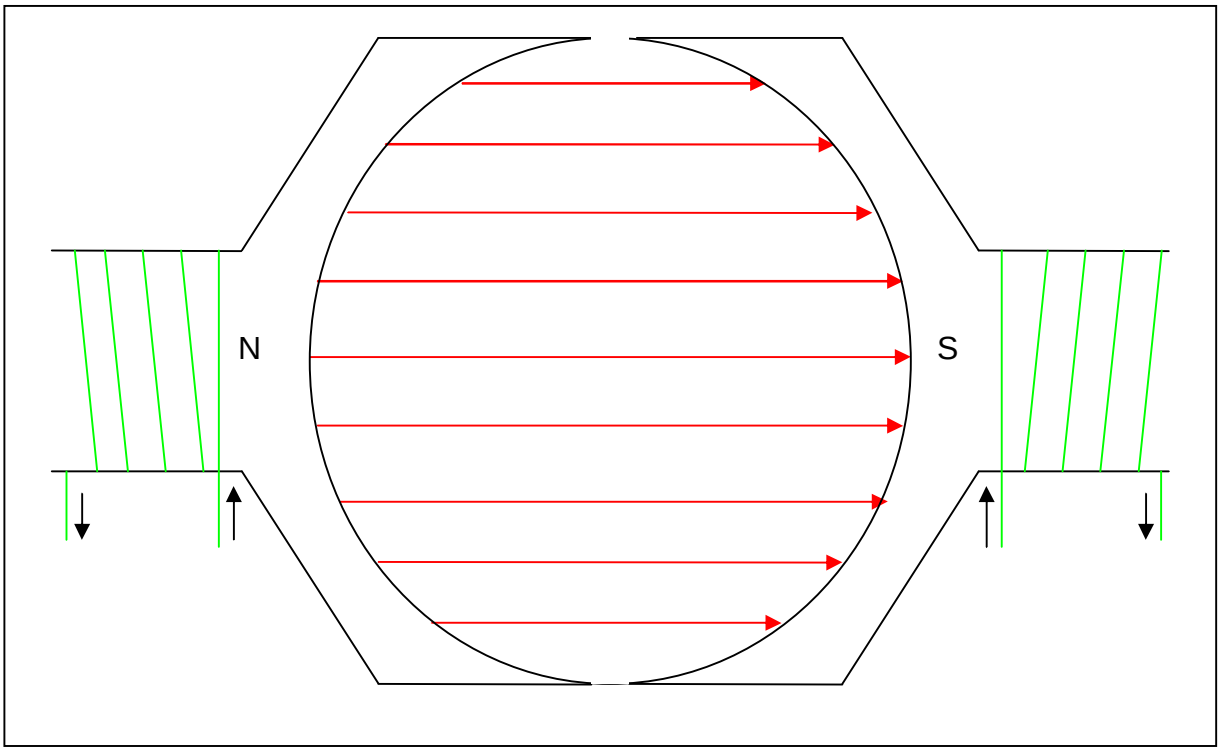

The function of the field magnet of a dynamo is to produce a stationary continuous, strong magnetic field, shown by red arrows. The red arrows are going through air. The coils of this electromagnet are shown in green, wrapped around the north and south poles of the stator, which are made of iron. The flow of electrons in the field coils, which are supplied by an armature rotating in the field, is shown by black arrows. This complete arrangement of parts is called the *stator* of the dynamo. The stator of a dynamo is a large stationary electromagnet.

48.2 How would it affect the voltage of a dynamo to increase the speed of rotation of its armature?

We will consider a direct current dynamo

The following pictures show again how a current is induced to flow in a conductor by a magnetic field that the conductor is moving through (cutting).

It is very important to understand these facts before we can understand how a dynamo or a motor operate.

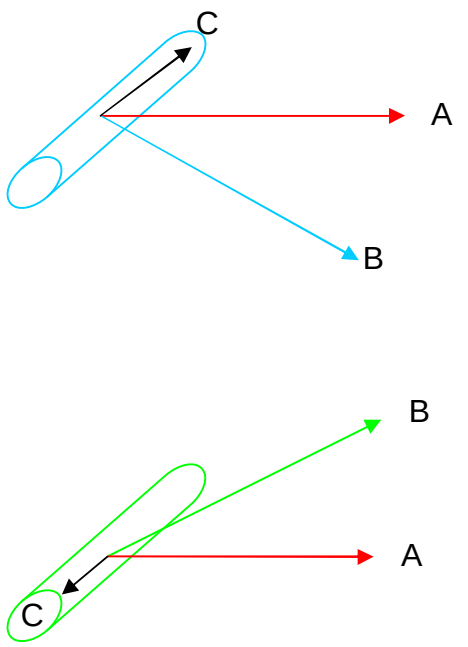

The red arrow is the direction of the magnetic field.

The blue arrow is the direction the blue conductor is moving through the field.

The green arrow is the direction the green conductor is moving through the field.

The black arrow is the direction in which electrons will be forced to move in the conductors.

The electrons always flow at right angles to A and B.

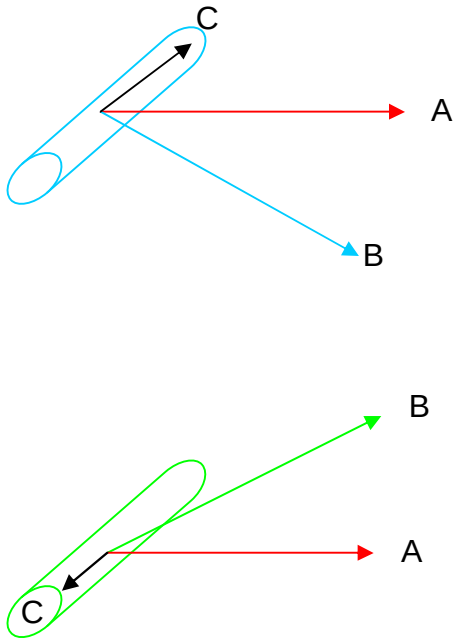

Mathematically, we say that A crossed with B equals C.

In math we write $A \otimes B = C$.

This means that we rotate arrow A toward arrow B, and this determines which direction arrow C will have.

Think of arrow A as the wrench moving toward arrow B. The direction of arrow C is the direction the grey bolt would move, as shown in the following picture.

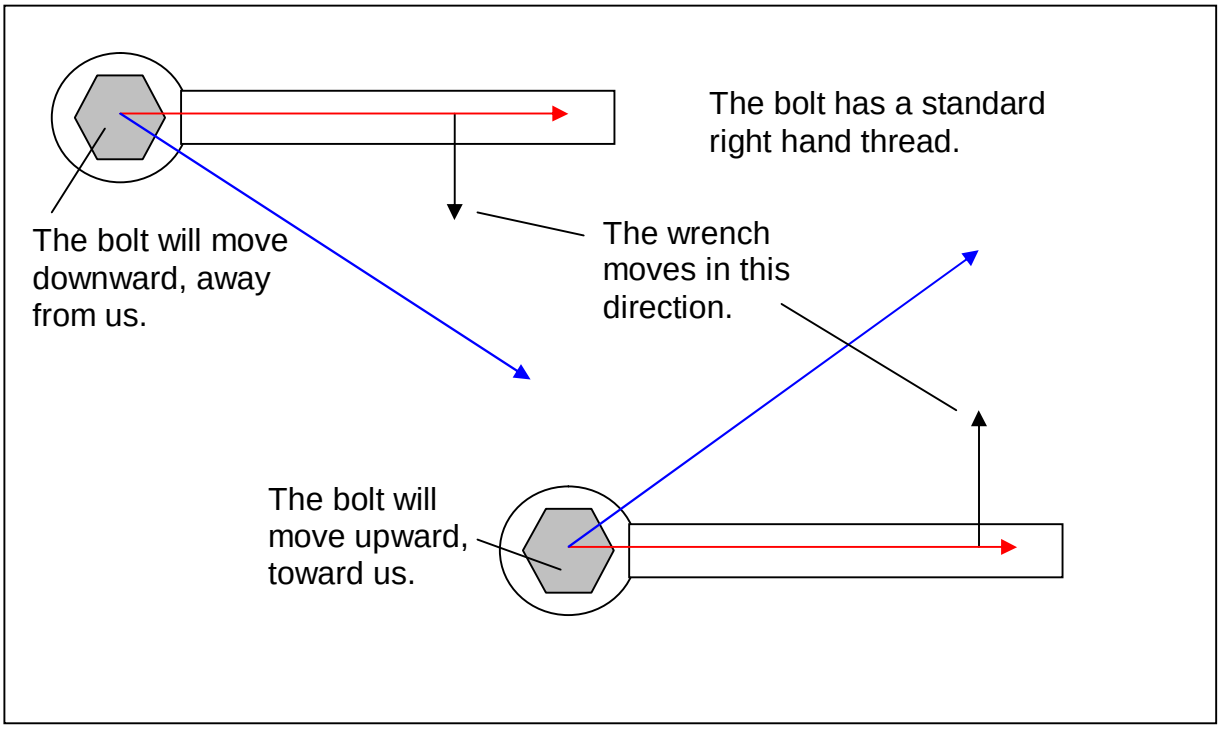

The following picture shows a simple armature that is being rotated clockwise in the stator's magnetic field. The stator was described in 48.1.

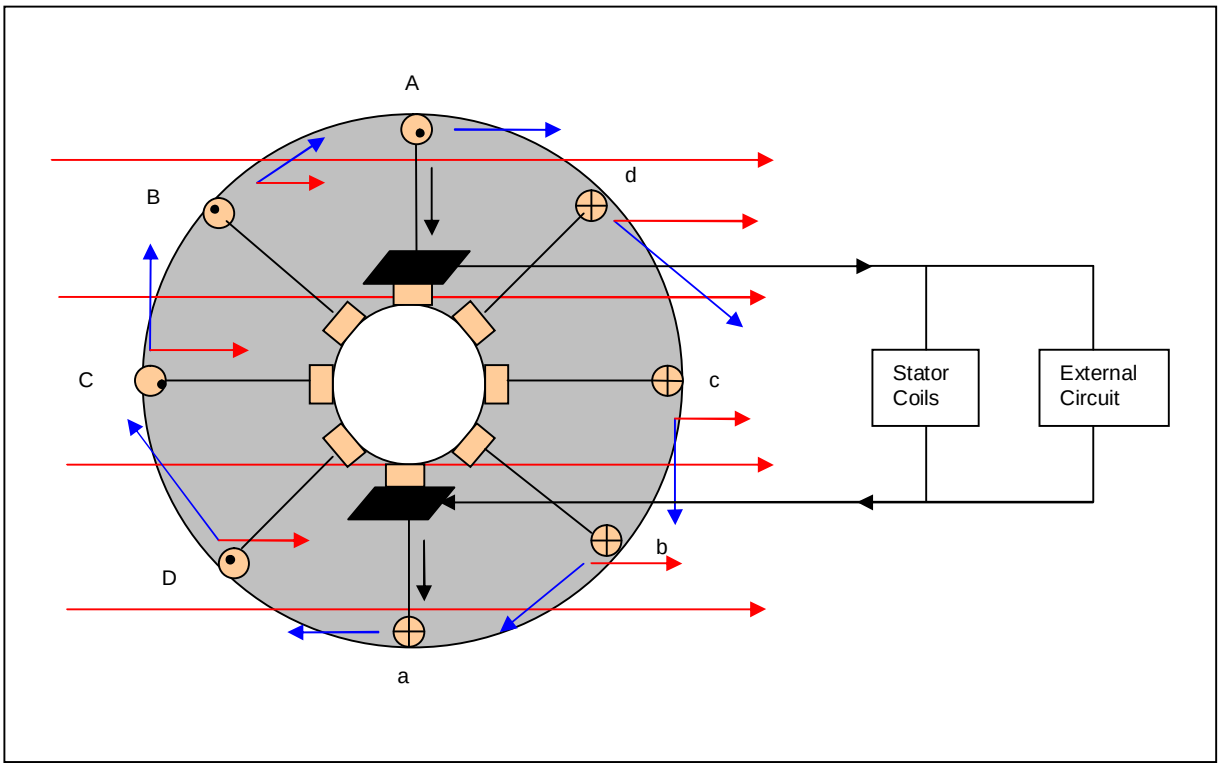

We are looking at the armature from one of its sides. Think of the armature as being divided from top to bottom in the middle and as having a left side and a right side.

The coils of copper wire, A, B, C, and D, are wound around the armature. The *ends* of these coils are connected together to form the armature **winding**, so that the

electrons moving in it *on the left and right sides* of the armature at any one instant in time *all move toward the* ***upper*** *carbon brush* (black rhombus), from where the electrons leave the dynamo and enter the external circuit. The upper carbon brush has a strong negative charge (an excess of electrons).

The copper coils on both sides of the armature *attract electrons from the* ***bottom*** *carbon brush* of the armature at any one instant in time. These electrons are immediately followed by electrons attracted from (flowing out of) the stator coils and the external circuit back toward the dynamo's lower carbon brush. . The lower carbon brush has a strong positive charge (a depletion of electrons).

Electrons therefore flow upward from the lower carbon brush through the left and right sides of the armature winding to the upper carbon brush, and from this brush through the stator coils and external circuit, from where they return to the lower carbon brush (this electron flow is shown by black arrows in the picture).

The carbon brushes are fixed in place on the stator housing, and do not rotate with the armature. As the armature rotates, the copper contacts that touch the brushes (all of them together as a configuration are called a **commutator**) change, but the electron current flow remains the same through the left and right sides of the armature, the carbon brushes, the stator coil, and the external circuit.

The blue arrows show how the copper wire segments on the face surface of the armature are moving through the stator's magnetic lines of force. These segments also show the direction of induced electron flow in them, a black dot for electrons moving toward us, and a black cross for electrons moving away from us.

It is the power of the machine driving the armature, causing it to rotate in the stator's magnetic lines of force, that forces the electrons to move in the coil windings on the armature.

***If the machine turns the armature faster, each conductor in the armature will cut more magnetic lines of force in a second, and the electron current in the coils will increase.**

48.3 A certain dynamo armature has 50 coils of 5 loops each. The total number of loops on the armature is 250. There are 250 conductors on one half of the armature and 250 conductors on the other half of the armature, for a total of 500 conductors on the surface of the armature. The armature rotates 660 times in one minute (11 revolutions per second). Each conductor (500 of them) cuts through 2,000,000 stator magnetic lines of force *twice* during one revolution, once when it moves upward through the stator's magnetic field and again when it moves downward to its original starting position through the stator's magnetic field (4,000,000 lines of force per conductor per revolution). How many volts does the dynamo produce?

***When a wire is cutting lines of force at the rate of 100,000,000 each second, an E.M.F. of 1 volt is induced in it.**

$$\frac{500 conductors}{1 revolution} \times \frac{4 \times 10^6 \, LinesOfForce}{1 conductor} \times \frac{11 revolutions}{s} = \frac{2.2 \times 10^{10} \, LinesOfForce}{s}.$$

$$\frac{2.2 \times 10^{10} \, LinesOfForce}{s} \times \frac{1 volt}{10^8 \, LinesOfForce} = 2.2 \times 10^2 \, volts = 220 volts.$$

48.4 What does the commutator of a dynamo do?

The commutator allows the current flowing in ½ of the effective wire segments in the coils to be added together to form a current flowing in the same direction toward one of the brushes in contact with the commutator. As the armature rotates, the commutator rotates with it and changes its position of contact with the brushes so that the currents flowing in both halves of the coils, one half on each side of the brushes as the dividing line between the two coil halves, do not change.

What is the purpose of a motor?

The purpose of a motor is to change electrical energy into mechanical energy. To do this, an electrical current is sent through the brushes of the motor into the coils of the armature. The magnetic fields produced in the coils of the armature oppose the magnetic lines of force of the stator field, and this repelling force on the coils which are embedded in the armature, by the fixed magnetic field of the stator, causes the armature to rotate. The commutator switches from segment to segment to ensure that the maximum coil field strengths are produced to oppose the magnetic field of the stator, and therefore operate the motor at maximum efficiency.

48.5 Explain the process of building up the stator field in a dynamo.

A dynamo that is not in operation has only a weak magnetic field in the stator remaining from the last time the dynamo was operated. When an outside source of mechanical energy begins to turn the armature, the conductors in the armature cut through these weak fields and produce an electric current, part of which flows through the stator coil fields to strengthen the stator's magnetic field of force. Now the conductors in the armature produce a stronger current, part of which again flows through the stator's coils strengthening the stator's magnetic field again. This process continues until the stator's magnetic field has been "built up" to its full strength.

48.6 Explain how an alternating current in the armature is transformed into a direct current in the external circuit.

If the ends of the coils wound on an armature were not connected, an alternating current would be flowing in each coil. The direction of current induced in each coil would change each time that the coil makes ½ of a revolution, and its effective conductor segments are again moving parallel to the stator's magnetic lines of force. It is at this location that the effective conductor segments of the coil, when moving farther, begin cutting the stator's magnetic lines of force *in the opposite direction*, which changes the direction of current induced in the coil.

The method of connecting the ends of these coils together to form the armature winding, and the armature winding's connections to the commutator change the alternating currents in the coils into a combined direct current.

48.7 Explain how a series wound motor can run on either a direct or an alternating current.

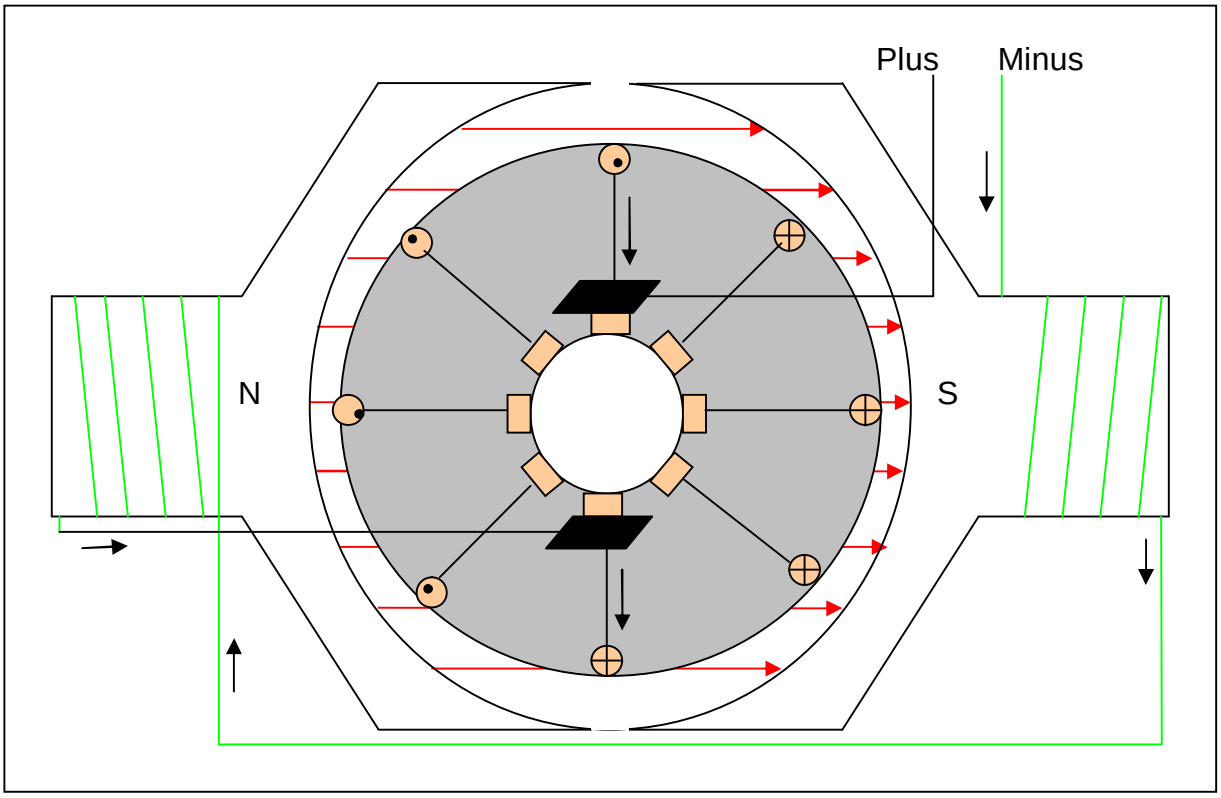

The picture shows an electric motor whose armature coil and stator coil are connected in series and powered from a direct current source. The electrons are flowing in the circuit as shown by the black arrows. The conductors on the left side of the armature will be forced downward, while the conductors on the right side of the armature will be forced upward. *The armature will rotate in a* ***counterclockwise*** *direction.*

If we now change the polarity of the direct current source, the situation is as shown in the picture below. The electrons are flowing in the circuit as shown by the black arrows.

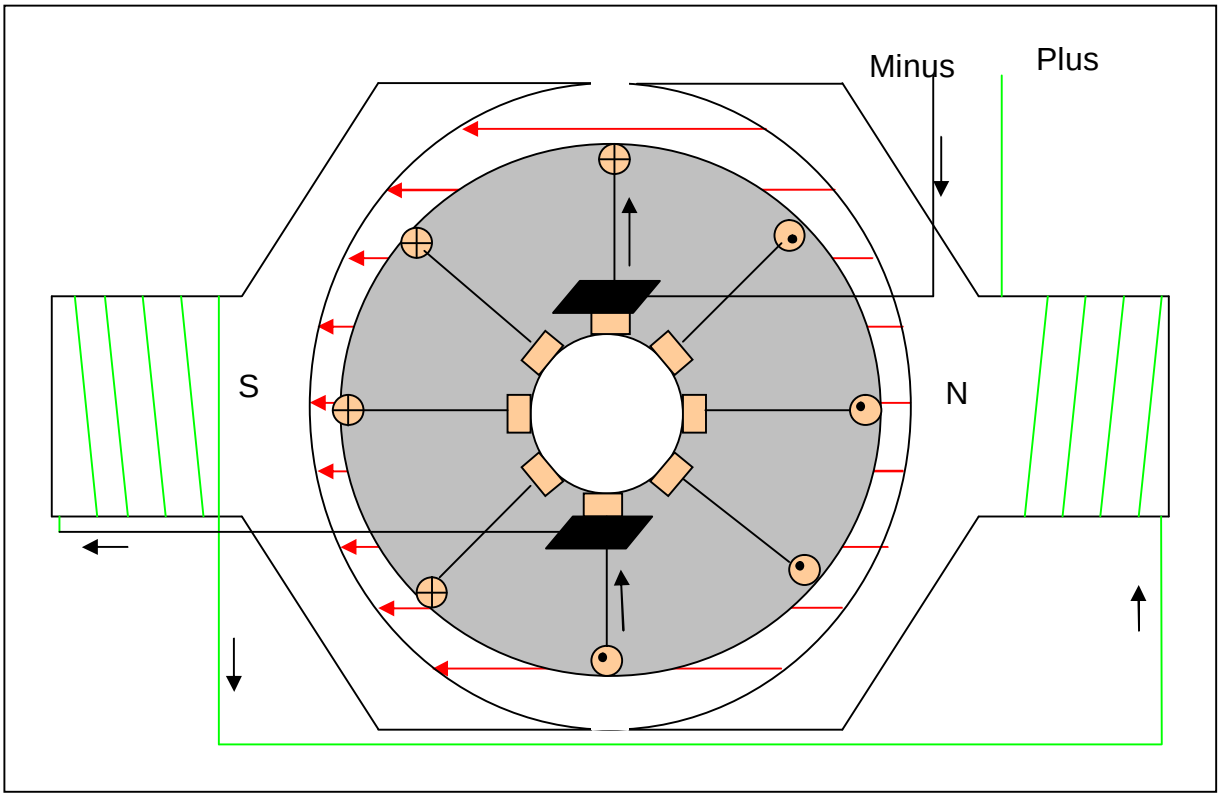

We see that the direction of the stator's magnetic field has reversed, and that the direction of the electrons flowing through the armature has reversed.

It is still true that the conductors on the left side of the armature will be forced downward, while the conductors on the right side of the armature will be forced upward. *The armature will still rotate in a* ***counterclockwise*** *direction*!

Since alternating current is equal to the constant changing back and forth of the polarity of the electrical power supply, the motor armature will always rotate in the counterclockwise direction.

*** A series-wound electrical motor will operate on either direct or alternating current, and will have only one direction of rotation.**

48.8 Will it take more work to rotate a dynamo armature when the circuit is closed than when it is open?

Yes, because energy will be consumed in the external electric circuit. This energy is furnished by the mechanical energy of the machine driving the dynamo.

***We remember that energy and work are the same, so more work must be done to rotate a dynamo that is operating on closed circuit (the dynamo is connected to an external circuit) than when the dynamo is operating on open circuit (the dynamo is not connected to an external electric circuit).**

48.9 Single dynamos often operate as many as 10,000 incandescent lamps at 110 volts. If these lamps are all arranged in parallel, and each requires a current of 0.5 ampere, what is the total current that must be furnished by the dynamo?

In a parallel electric circuit, the total current is equal to the sum of the currents flowing through the parallel branches. $I_{Total} = \frac{10{,}000 lamps}{1} \times \frac{0.5A}{1 lamp} = 5000 amperes$.

What is the power of the dynamo in kilowatts and in horsepower?

The power consumed in the external circuit is $P = I \times E = 5000A \times 110V = 550{,}000VA = 550{,}000W = 550Kw$.

One horsepower is equal to 746 watts.

$$\frac{550{,}000W}{1} \times \frac{1HP}{746W} = 737HP.$$

48.10 How many 110 volt lamps, 0.5A per lamp, can be lighted by a 12,000Kw generator?

Each lamp uses a power of $P = I \times E = 0.5A \times 110V = 55VA = 55W = 0.055Kw$.

The total number of lamps that can be lit by the generator is

$$\frac{12{,}000Kw}{1} \times \frac{1lamp}{0.055Kw} = 218.181lamps \Rightarrow 218lamps.$$

Some energy will be lost in the circuit, so probably about 200 lamps could be attached to the circuit.

48.11 Why does it take twice as much work to keep a dynamo running when 1000 lights are on the circuit as when only 500 are on the circuit?

Work = Energy = Power x Time.

$P = I \times E = 1000A \times Evolt = 1000 \times Ewatt$.

$P = I \times E = 500A \times Evolt = 500 \times Ewatt$.

Power is the time rate of work. $Power = \frac{Work}{Time}$. So, $Work = Power \times Time$.

If we choose 1 second for operating the lamps in each case, we have the following comparison.

$Work_{1000lamps} = 1000 \times Ewatt \cdot s$

$Work_{500lamps} = 500 \times Ewatt \cdot s$. Twice as much work is required to light 1000 lamps than 500 lamps.

49. INDUCTION COIL AND TRANSFORMER

49.1 Draw a diagram of an induction coil and explain its action.

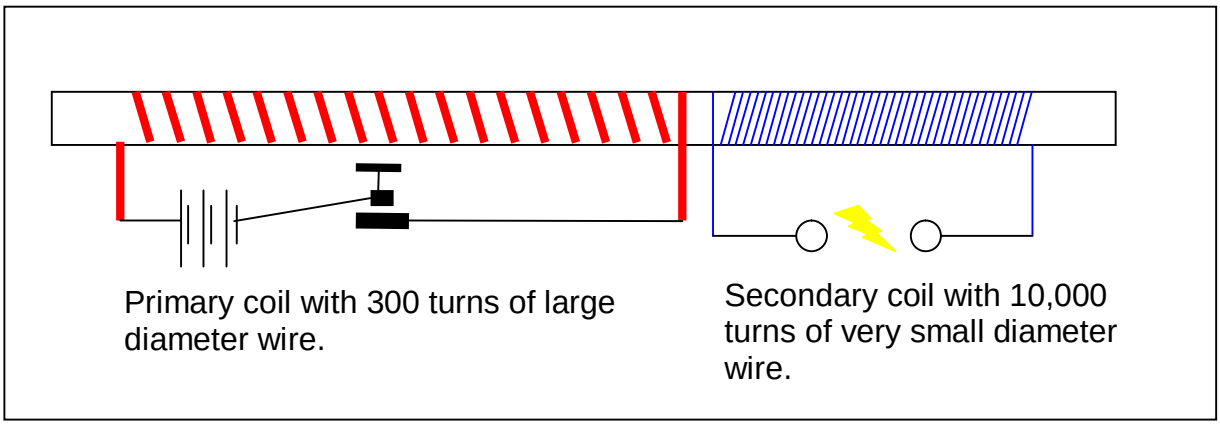

When the switch is pressed downward closing the circuit of the primary coil (make), a heavy electric current begins to flow in the primary coil. This current causes a strong magnetic field to build up around the coil, which cuts the loops of wire in the primary coil and produces an induced current in it that opposes the main current coming from the battery. This induced current in the primary coil weakens the current flowing from the battery through the primary coil, but does not stop the battery current, which continues to flow.

The magnetic field continues to strengthen (build up) until the full current that can flow through the primary coil has been reached.

The magnetic field that builds up also cuts through the wire loops of the secondary coil (because both coils are wound on the same metal core), inducing a very high voltage in the secondary coil because no current can flow in it and it has very many turns of fine wire wound in it through which the magnetic field lines move. This voltage is not large enough to cause a spark to jump between the two ends of the secondary coil.

When the switch is opened again (break), the current immediately stops flowing in the primary coil. The magnetic field falls together, in the opposite direction to build-up, very rapidly. This time, the magnetic field lines that pass through the primary coil can not induce a current in it, because there is no longer a path through the primary coil along which an induced current can flow.

The magnetic field lines now cut very rapidly through the wire loops in both coils in the opposite direction to field build-up. A very high voltage is induced in the secondary coil, which is strong enough to cause a spark to jump between the two ends of the secondary coil. The voltage in the secondary coil returns to zero.

49.2 Does the spark of an induction coil occur at make or break?

The spark of an induction coil occurs when the switch is opened, which is called “at break”, because this *breaks the flow of current* in the primary coil circuit.

49.3 Explain why an induction coil is able to produce such an enormous voltage.

When the switch is opened, the speed at which the magnetic field lines cut through the many wire loops in the winding of the secondary coil is extremely high. The

movement of the “collapsing” field lines through the secondary coil in this very short time period produces an extremely high voltage (10,000 to 50,000 volts), which is high enough to cause an electric spark to jump between the two ends of the secondary coil.

49.4 Why could an armature core not be made of coaxial cylinders of iron running the full length of the armature, instead of flat disks?

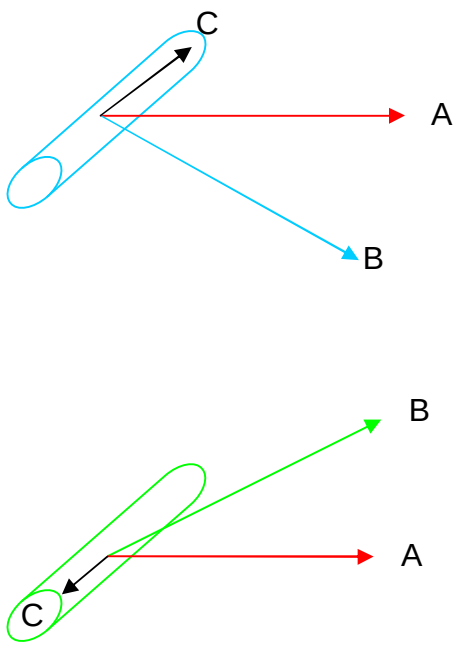

The red arrow is the direction of the magnetic field, A.

The blue arrow is the direction the blue conductor is moving through the field, B.

The green arrow is the direction the green conductor is moving through the field, B.

The black arrow is the direction the magnetic field will force electrons to move in the metal of the armature.

The electrons are always forced to move at right angles to A and B.

The field lines crossed with the direction of motion of the metal atoms in the armature ($Field \otimes ConductorMotion$), will force electrons in the metal of the armature in a direction that is parallel to the axis of rotation of the armature. If cylinders are used to make the armature, electric currents would flow in the cylinders and heat them, destroying the armature.

If flat disks are stacked side by side, the axis of rotation going through their centers to make the armature, and if these disks are insulated from another, no current path is available for an induced current to flow. This ensures that the armature does not overheat because of an electrical current flowing in it.

49.5 What relation must exist between the number of turns on the primary and secondary coils of a transformer which feeds 110V lamps from a main line whose conductors are at 1100 volts?

The primary coil voltage of the transformer is the main line voltage at 1100V

The secondary coil voltage of the transformer is the lamp line voltage at 110V

We must have a step down transformer.

The relation of voltages in the coils of a transformer is the same as the relation between the number of turns of wire in the transformer’s coils.

$$\frac{V_{primary}}{V_{secondary}} = \frac{N_{primary}}{N_{secondary}} \Rightarrow \frac{1100V}{110V} = \frac{N_{primary}}{N_{secondary}} \Rightarrow \frac{10}{1} = \frac{N_{primary}}{N_{secondary}} \Rightarrow N_{secondary} = \frac{N_{primary}}{10}.$$

49.6 Name two uses and two disadvantages of mechanical friction; of electrical resistance.

Advantages of mechanical friction are stopping motion and controlling speed.

Disadvantages of mechanical friction are heat generation and power loss.

Advantages of electrical resistance are limiting current and lowering voltage.

Disadvantages of electrical resistance are heat generation (I^2R) and power loss.

50. SPEED AND NATURE OF SOUND

The speed of sound is 331.2 meters per second at 0 °C. It increases 0.6 meters per second for each degree centigrade above 0°C.

The speed of sound is 1120 feet per second at 0 °C. It increases 0.18 feet per second for each degree centigrade above 0°C.

*All frequencies of sound waves travel through the air at the same speed.

*The frequency (f) is the number of sound waves produced per second.

*The wavelength (λ) is the length of one of the sound waves.

*If we multiply f by λ, we always receive the same answer, the speed of sound.

The ability of the air molecules to transmit motion between them can not be appreciably changed by increasing the frequency or the amplitude of the sound being produced.

Increasing the intensity of the sound, the amplitude, effects the distance the sound can be transmitted, but not its speed.

Each air molecule travels a small distance and strikes a neighboring air molecule, giving part of its energy to the other air molecule, and so forth. This distance, apparently, must be nearly constant for any frequency, because measurements of the speed of sound over differing distances always gives the same velocity when the air mass it is travelling in has the same temperature.

50.1 A thunderclap was heard 5 ½ seconds after the accompanying lightning flash was seen. How far away did the flash occur, the temperature at the time being 20 °C?

The speed of sound at 20°C is:

$$\frac{331.2m}{1s}+\left[\frac{0.6m}{s°C}\times\frac{20°C}{1}\right]=331.2\frac{m}{s}+12\frac{m}{s}=343.2\frac{m}{s}.$$

The distance the lightning was away is:

$$\frac{343.2m}{s}\times\frac{5.5s}{1}=1{,}887m.$$

This distance in miles is:

$$\frac{1{,}887m}{1}\times\frac{39.37in}{m}\times\frac{1ft}{12in}\times\frac{1mile}{5280ft}=1.17miles\cong 1.2miles.$$

50.2 Why does the sound die away very gradually after a bell is struck?

Loudness is determined by the distance of the hearer from the source of the sound, and by the strength of the amplitude of the source of the sound.

A certain mechanical energy was imparted to the bell to cause it to ring. This energy is given up to the air molecules near the bell as the bell surface strikes them in both directions (inside and outside of the bell). This reduced energy in the bell weakens the vibration amplitude of the bell.

The cohesive forces between the metal molecules in the bell weaken their vibrations in time.

As the process continues by every motion of the bell forward and backward, giving up more energy to the air molecules it strikes, the amplitude of the vibrations in the bell and in the air continually decreases until the ringing of the bell can no longer be heard.

50.3 Why does placing the hand back of the ear increase a partially deaf person's ability to hear?

A greater portion of the wave front in the air is diverted toward the ear and then to the eardrum, increasing the energy that stimulates the eardrum and our sense of "hearing".

50.4 The vibration rate of a fork is 256. Find the wave length of the note given out by it at 20°C.

The speed of sound at 20°C is 343.2 meters per second.

256 complete waves are formed per second.

256 complete waves then, have a total length of 343.2 meters.

The length of one of these waves is 1/256th of the total length of 256 waves.

$$\frac{1}{256} \times \frac{343.2m}{1} = \frac{1.34m}{1} \times \frac{100cm}{m} = 134cm.$$

50.5 Because the music of an orchestra reaches a distant hearer without confusion of the parts, what may be inferred as to the relative velocities of the notes of different pitch?

***Sound waves of all frequencies travel through the air at the same speed.**

50.6 What is the relation between pitch and wavelength?

The higher the pitch (frequency = f) is, the shorter is the wavelength (λ).

$$f = \frac{1}{\lambda} \Rightarrow \lambda = \frac{1}{f}.$$

***The frequency f is the number of sound waves produced per second.**

***The wavelength is the length of one of the sound waves.**

***If we multiply f by λ, we always receive the same answer, the speed of sound.**

50.7 If we increase the amplitude of vibration of a guitar string, what effect does this have on the amplitude of the wave?

The amplitude of the wave is increased.

Is there a change in the loudness?

The ear hears the increased amplitude as increased loudness.

Is there a change in the frequency?

There is no change in the frequency.

51. SOUND, REFLECTION, REINFORCEMENT, INTERFERENCE

***The shortest length of resonant frequency for a closed tube is ¼ of the wavelength producing resonance in the tube.**

***The speed of sound at 0°C is 331.2 meters per second. It increases 0.6 meters per second for every 1°C increase in temperature above 0°C. It decreases 0.6 meters per second for every 1°C decrease in temperature below 0°C.**

***The speed of sound is about 333 meters per second.**

***The speed of sound is about 1120 feet per second.**

***The frequency of sound multiplied by the wavelength of the sound is equal to the speed of sound.**

***The resonant wavelengths of a closed pipe are $\frac{\lambda}{4}$ and $\frac{N \times \lambda}{4}$, where N is an odd whole number (1, 3, 5, 7, 9, etc.).**

***The resonant wavelengths of an open pipe are $\frac{\lambda}{2}$ and $\frac{N \times \lambda}{2}$, where N is an even whole number (2, 4, 6, 8, 10, etc.).**

51.1 Account for the sound produced by blowing across the mouth of an empty bottle.

Some of the air is directed toward the base of the bottle. This air strikes the bottom of the bottle and is reflected upward, shortly pushing the incoming air out of its way.

The incoming air, however, is constantly being blown into the bottle and enters the bottle again.

This repeated process causes air compressions and rarefactions to occur at the mouth of the bottle, which move throughout the air space around the bottle.

The ear hears these air oscillations as a tone.

The bottle can be tuned to produce different tones by filling it with water. Explain why.

This shortens the time required for the reflected air to return to the mouth of the bottle, causing faster air oscillations to occur (producing a higher tone).

51.2 Explain the “roaring” sound heard when a sea shell, a tumbler, or an empty tin can is held to the ear.

Many sounds are transmitted constantly through the air from several sound sources too weak to be heard by the ear.

Any contained area that causes the energy of some of these sounds to be increased, by directing a larger portion of their wave fronts toward the air so that they can be heard, will cause the detection of (“hearing”) several sounds at once.

This is the “roaring” that is heard when placing, for example, a large sea shell near the ear.

51.3 Find the number of vibrations per second of a tuning fork that produces resonance in a closed pipe 1 foot long.

***A closed pipe resonates at a frequency of 1/4 of the wavelength of the frequency causing the pipe to resonate.**

If ¼ of the wavelength is 1 foot, then the wavelength of the tuning fork must be 4 feet.

***The speed of sound is about 1120 feet per second.**

***The frequency of sound multiplied by the wavelength of the sound is equal to the speed of sound.**

$f \times \lambda = v \Rightarrow f = \frac{v}{\lambda} = \frac{\frac{1120\,ft}{1s}}{4\,ft} = \frac{1120\,ft}{1s \times 4\,ft} = \frac{280}{s}$. The frequency is 280 vibrations per second.

51.4 A hunter hears an echo five and one-half seconds after he fires his rifle. How far away was the reflecting surface if the temperature of the air was 20°C?

***The speed of sound at 0°C is 331.2 meters per second. It increases 0.6 meters per second for every 1°C increase in temperature.**

$$v_{sound\,20°C} = \frac{331.2m}{1s} + \left[20 \times \frac{0.6m}{1s}\right] = \frac{331.2m}{1s} + \frac{12m}{1s} = 343.2\frac{m}{s}.$$

The time between the firing of the rifle and the hearing of the echo was 5.5 seconds.

The total distance traveled by the sound was $V_{sound\,20°C} \times T = \frac{343.2m}{1s} \times \frac{5.5s}{1} = 1{,}887.6m$.

The reflecting surface is at ½ of this distance away, or 943.8 meters from the hunter.

51.5 The shortest closed air column that produced resonance when a tuning fork was held above it was 32 centimeters long. Find the frequency of vibration of the fork if the speed of sound is taken to be 340 meters per second.

The length of the closed air column is $\frac{32cm}{1} \times \frac{1m}{100cm} = 0.32meter$.

This is ¼ of the wavelength produced. $\lambda = 4 \times 0.32m = 1.28meters$

$$f \times \lambda = v \Rightarrow f = \frac{v}{\lambda} = \frac{\frac{340m}{1s}}{1.28m} = \frac{340m}{1s \times 1.28m} \cong \frac{266}{s}.$$

The tuning fork is vibrating at approximately 266 vibrations per second.

51.6 A tuning fork produces a strong resonant sound above an air column when it is held on its flat side or on its edge, but when held cornerwise over the air column the resonance ceases. Explain.

The air entering the tube must enter at right angles (at a 90°angle) to the bottom of the tube, if it is to reflect toward the mouth of the tube where it can cause a resonant tone. This can not occur if the tuning fork is turned at an angle too far away from 90 degrees at the mouth of the tube.

51.7 What is meant by the phenomenon “beats” in sound?

The number of beats per second is equal to the difference in the vibration numbers of the two frequencies causing the beat.

51.8 What is the length of the shortest closed tube that will act as a resonator for a fork whose vibration rate is 427 per second?

***The shortest length of resonant frequency for a closed tube is ¼ of the wavelength producing resonance in the tube.**

$$\lambda = \frac{V_{sound\,20°C}}{f} = \frac{\frac{343.2m}{1s}}{\frac{427vibrations}{1s}} = \frac{343.2m}{1s} \times \frac{1s}{427vibrations} \cong \frac{0.804m}{1vibration}.$$

One quarter of this wavelength is $0.804M \times 0.25 = \frac{0.201m}{1} \times \frac{100cm}{1m} = 201cm$.

The closed tube must have a length of 201cm.

51.9 A tuning fork making 500 vibrations per second is found to produce resonance over an air column like that shown in the picture. First when the water is a certain distance from the top, and then again when it is 34 centimeters lower. What temperature was the air?

The picture shows an arrangement that uses water to change the length of a closed tube.

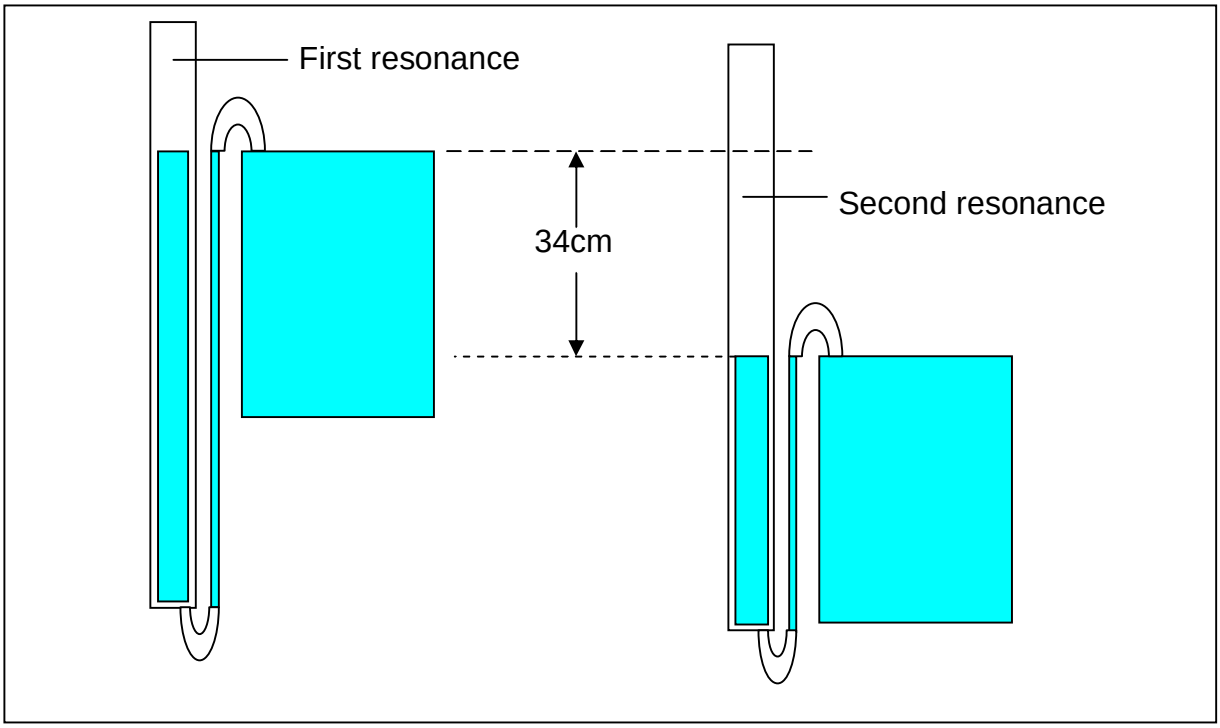

The closed tube resonance occurs the first time at $\frac{\lambda}{4}$, and the second time at $\frac{3\lambda}{4}$.

There are 34 centimeters between these two positions, or $\frac{3\lambda}{4} - \frac{\lambda}{4} = \frac{2\lambda}{4} = \frac{\lambda}{2}$.

The wavelength, λ, is twice this value, or 68 centimeters= 0.68 meters

The speed of *this* sound is $v = \lambda \times f = \frac{0.68M}{1vibration} \times \frac{500vibrations}{1s} = \frac{340m}{s}$.

The speed of sound at 0°c is 331.2 meters per second.

The difference in the two speeds of sound is 340m/s – 331.2m/s = 8.8m/s.

A temperature increase of 1°C causes an increase in the speed of sound of 0.6 meters per second.

$$\frac{8.8m}{1s} \times \frac{1°C}{\frac{0.6m}{1s}} = \frac{8.8m}{1s} \times \frac{1s}{0.6m} \times \frac{1°C}{1} = 14\frac{2}{3}°C.$$

The temperature of the air was 14.67, or about 15 degrees centigrade.

51.10 Show why an open pipe needs to be twice as long as a closed pipe if it is to respond to the same note.

***The resonant wavelengths of a closed pipe are $\frac{\lambda}{4}$ and $\frac{N \times \lambda}{4}$, where N is an odd whole number (1, 3, 5, 7, 9, etc.).**

***The resonant wavelengths of an open pipe are $\frac{\lambda}{2}$ and $\frac{N \times \lambda}{2}$, where N is an even whole number (2, 4, 6, 8, 10, etc.).**

The wavelength $\frac{\lambda}{2}$ is twice as long as the wavelength $\frac{\lambda}{4}$, so, an open pipe must be twice as long as a closed pipe to resonate at the same frequency.

52. PROPERTIES OF MUSICAL SOUNDS

52.1 In what three ways do piano makers obtain the different pitches (notes)?

Piano makers use the length of the strings, the thickness of the strings, and the tension on the strings to produce the different notes.

52.2 What did Helmholz prove by means of his resonators?

The qualities of different musical instruments and the spoken vowel sounds can be imitated by combining overtones at specific individual intensities (frequencies and loudness).

52.3 If middle C is struck on a piano while the key for G in the octave above is held down, G will be distinctly heard when C is silenced. Explain.

C has a relative vibration number of 24, while G has a relative vibration number of 36, or 11/2 times C, or 3/2 of C. Therefore, G is an *upper harmonic*, or *overtone* of C and C will cause G to vibrate for this reason.

52.4 At what point must the G_1 string be pressed by the finger of a violinist to produce the note C?

G is 3/2 the wavelength of C, so, when G is pressed 1/3 of its length from one of its ends, two half wavelengths of G, which are equal to one wavelength of C, are left to produce the note C.

52.5 If one wire, B, has twice the length of another, A, and is stretched by four times the stretching force on A, how will their vibration numbers compare?

By doubling the length of wire B, wire B will vibrate at ½ the rate of wire A, when both wires are otherwise identical and have the same tension applied to them.

If we now double the tension on B, B will vibrate twice as fast, or 2 x ½ the rate of A = 1 x the rate of A = A. Wire B will now produce the same sound as wire A.

If we double the tension on wire B again, making the tension on wire B four times that on wire A, wire B will now vibrate at a rate that is twice that of wire A.

The vibration number of wire B will be twice the vibration number of wire A.

52.6 A wire produces the note G. What is its fourth overtone?

G has a relative vibration number of 36; its first overtone is 2 times, the second overtone is four times, the third overtone is eight times, and the fourth overtone is sixteen times 36 vibrations per second.

$\frac{16}{1} \times \frac{36 vibrations}{1s} = 576 \frac{vibrations}{s}$. This is the tone D´´´´. The fourth overtone of G is a D tone.

52.7 If middle C had 300 vibrations per second, how many would F and A have?

C has a relative vibration number of 24, F of 32, and A of 40.

$$F = \frac{32}{24} \times C = \frac{4}{3} \times C = \frac{4}{3} \times \frac{300 vibrations}{1s} = 400 \frac{vibrations}{s}.$$

$$A = \frac{40}{24} \times C = \frac{5}{3} \times C = \frac{5}{3} \times \frac{300 vibrations}{1s} = 500 \frac{vibrations}{s}.$$

52.8 What is the fourth overtone of C?

The fourth overtone of C would vibrate 2^4, or sixteen times as fast as C.

C vibrates at 256 vibrations per second.

$$FourthOvertoneOf\_C = \frac{16}{1} \times \frac{256 vibrations}{1s} = \frac{4096 vibrations}{s}.$$

52.9 There are seven octaves and two notes to an ordinary piano, the lowest note being A_4, and the highest one C´´´´. If the vibration number of the lowest note is 27, find the vibration note of the highest.

Syllable	do	re	mi	fa	so	la	si	do	re
Letters	C	D	E	F	G	A	B	C’	D’
Relative Vibration Numbers	24	27	30	32	36	40	45	48	54

If A has a frequency of 27, B has a frequency of 30 and C has a frequency of 32.

At 8 octaves above these frequencies, the corresponding frequencies are 2^8, or 256 times as much.

If the frequency of C is 32 vibrations per second, the frequency of C´´´´ is 32 x 256 = 8192 vibrations per second.

52.10 Find the wave length of the lowest note on the piano and the wave length of the highest note on the piano.

$$\lambda_{low} = \frac{v}{f_{low}} = \frac{\frac{333m}{1s}}{\frac{27 vibrations}{1s}} = \frac{12.33 meters}{1 vibration}.$$

$$\lambda_{high} = \frac{v}{f_{high}} = \frac{\frac{333m}{1s}}{\frac{8192 vibrations}{1s}} = \frac{0.04m}{1 vibration} \times \frac{100cm}{1m} = \frac{40cm}{1 vibration}.$$

The lowest note on the piano has a wavelength of 12.33 meters, and the highest note on the piano has a wavelength of 40 centimeters.

52.11 A violin string is commonly bowed about one seventh of its length from one end. Why is this better than bowing the violin in the middle of the strings?

Bowing at about one seventh of the length of the strings produces the basic tone and many overtones, giving a rich, full sound to the music being played.

Bowing at the middle of the strings will only produce the fundamental tones without the overtones.

52.12 Build up a diatonic scale on C=264 vibrations per second.

Syllable	do	re	mi	fa	so	la	si	do	re
Letters	C	D	E	F	G	A	B	C’	D’
Relative Vibration Numbers	24	27	30	32	36	40	45	48	54
frequencies	264	297	330	352	396	480	495	528	594

D is 27/24 times more than C. E is 30/24 times more than C. F is 32/24 times more than C. The other notes are calculated in the same manner.

C’ and D’ are in the next higher, or first octave above the basic notes.

The **octaves above** the basic scale are:

First octave = 2^1 = 2 times the basic frequencies.

Second octave = 2^2 = 4 times the basic frequencies.

Third octave = 2^3 = 8 times the basic frequencies.

Fourth octave = 2^4 = 16 times the basic frequencies.

Fifth octave = 2^5 = 32 times the basic frequencies.

Sixth octave = 2^6 = 64 times the basic frequencies.

Seventh octave = 2^7 = 128 times the basic frequencies.

Eighth octave = 2^8 = 256 times the basic frequencies.

The **octaves below** the basic scale are:

First octave = $1/2^1$ = 1/2 times the basic frequencies.

Second octave = $1/2^2$ = 1/4 times the basic frequencies.

Third octave = $1/2^3$ = 1/8 times the basic frequencies.

Fourth octave = $1/2^4$ = 1/16 times the basic frequencies.

Fifth octave = $1/2^5$ = 1/32 times the basic frequencies.

Sixth octave = $1/2^6$ = 1/64 times the basic frequencies.

Seventh octave = $1/2^7$ = 1/128 times the basic frequencies.

Eighth octave = $1/2^8$ = 1/256 times the basic frequencies.

53. WIND INSTRUMENTS

53.1 What proves that a musical note is transmitted as a wave motion?

The resonance of closed pipes at $\frac{1}{4}, \frac{3}{4}, \frac{5}{4}, \frac{7}{4}$,.....,times one wave length, and the resonance of open pipes at $\frac{1}{2}, \frac{2}{2}, \frac{3}{2}, \frac{4}{2}, \frac{5}{2}$,.....times one wave length strongly support the idea that sound travels as a wave motion.

53.2 What evidence shows that sound waves are longitudinal waves?

The intensity of the sound (loudness) is greatest in the direction of the source of the sound, and diminishes (becomes less) rapidly at right angles to and farther away from the source of the sound.

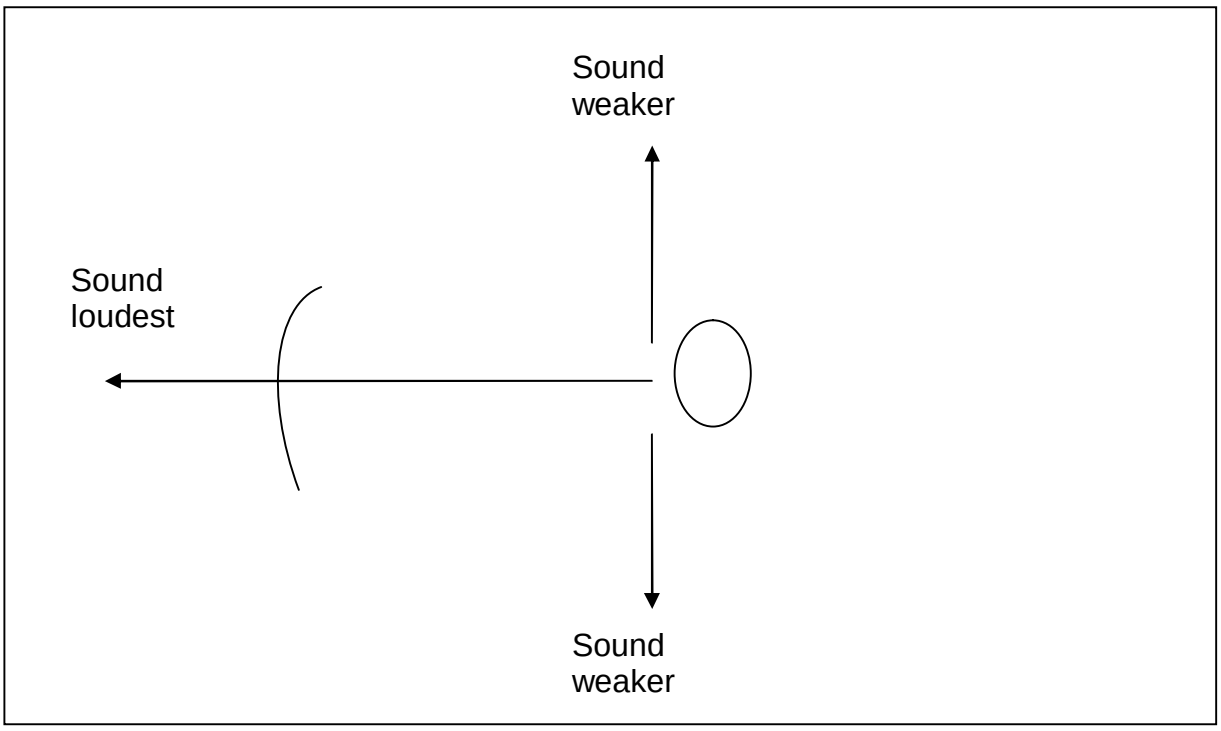

53.3 Why is the pitch (frequency) of a sound produced by a phonograph needle raised by increasing the speed of rotation of the record?

The compressions (sudden moving of the air molecules outward) and rarefactions (sudden pulling bock of the air molecules to their normal positions) occur at a faster rate, producing a higher pitch in the sound produced.

53.4 What will be the relative lengths of a series of organ pipes which produce the eight notes of a diatonic scale?

Organ pipes that are open pipes produce notes based on even multiples of half-wavelengths.

The diatonic scale is:

C(256), D(288), E(320), F(3411/3),G(384),A(426 2/3), B(480).

The speed of sound is 333 M/s at room temperature.

$\lambda = \frac{c}{f}$, so the full wave lengths of the diatonic scale are:

C(333/256), D(333/288), E(333/320), F(333/3411/3),G(333/384),A(333/426 2/3), B(333/480).

$\lambda_C = 1300.78mm, \lambda_D = 1156.25mm \lambda_E = 1040.625mm, \lambda_F = 975.58mm, \lambda_G = 867.19, \lambda_A = 780.46mm$

$\lambda_B = 693.75mm$.

The lengths of these pipes are ½ of these wavelengths. If we take pipe C to be the pipe compared to all others, we find that:

D = 9/10 of C, E = 8/10 of C, F = ¾ of C, G = 2/3 of C, A = 3/5 of C, and B = 0.53 (about½) of C.

53.5 Will the pitch (frequency) of a pipe organ be the same in summer as on a cold day in winter? What could cause a difference?

The speed of sound increases with temperature, about 60 cm/s for every 1°C temperature increase.

$f = \frac{c}{\lambda}$. If we can consider the wavelength of the organ pipes to remain constant, this means that when the speed of sound increases (corresponding to a temperature increase), the frequency of the sound must also increase.

If the speed of sound decreases, (corresponding to a temperature decrease), the frequency of the sound must also decrease.

We would therefore expect the pitch of an organ pipe to be higher in summer and lower in winter.

53.6 Explain how an instrument like the bugle, which has an air column of unchanging length, be made to produce several notes of different frequency, such as C_4, G_4, C_5, E_5, G_5?

C_4 (256) G_4 (384) C_5 (512) E_5 (640) G_5 (768) are to be compared with another.

We find that G_4 is 1.5 x C_4, C_5 is 2 x C_4, E_5 is 2.5 x C_4, G_5 is 3 x C_4.

All of these tones are overtones of C_4, which can be produced by the player pressing his lips firmer together to produce the vibration numbers of the overtones.

53.7 Why is the quality of an open pipe organ different from that of a closed pipe organ?

Open pipes can produce all overtones as integral numbers of half wavelengths.

Closed pipes can only produce odd integral numbers of quarter wavelengths.

Open pipes can produce all harmonics, odd and even.

Closed pipes can only produce odd harmonics.

When more harmonics can be produced, the quality of the tone is higher.

53.8 The velocity of sound in hydrogen is about four times greater than in air. If a C pipe is blown with hydrogen, what will be the frequency of the note produced?

$$f_{C4} = \frac{v}{\lambda_C} = 256\frac{vibrations}{s} \Rightarrow f_? = \frac{4v}{\lambda_C} = 4\times\frac{v}{\lambda_C} = 4\times 256\frac{vibrations}{s} = 1024\frac{vibrations}{s} = C_6$$

54. THE PROPAGATION OF LIGHT

The speed of light is 300,000,000 (3×10^8) meters per second.

The speed of light is 186,000 (186×10^3) miles per second.

***Light travels only about ¾ as fast in water as in a vacuum.**

54.1 The figure shows a shadow, the portion acdb of which is called the umbra, aec and bdf the penumbra. What kind of light source has no penumbra?

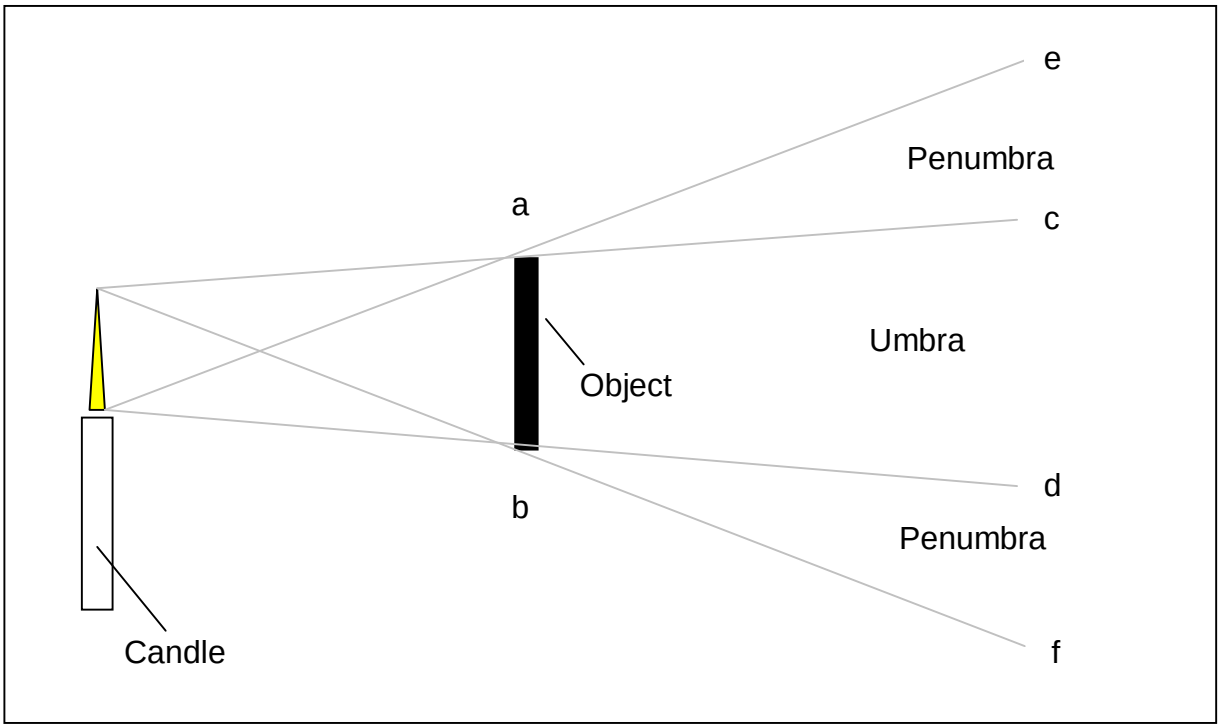

A light source coming from a single point will cast shadows having only an umbra, as shown in the following picture.

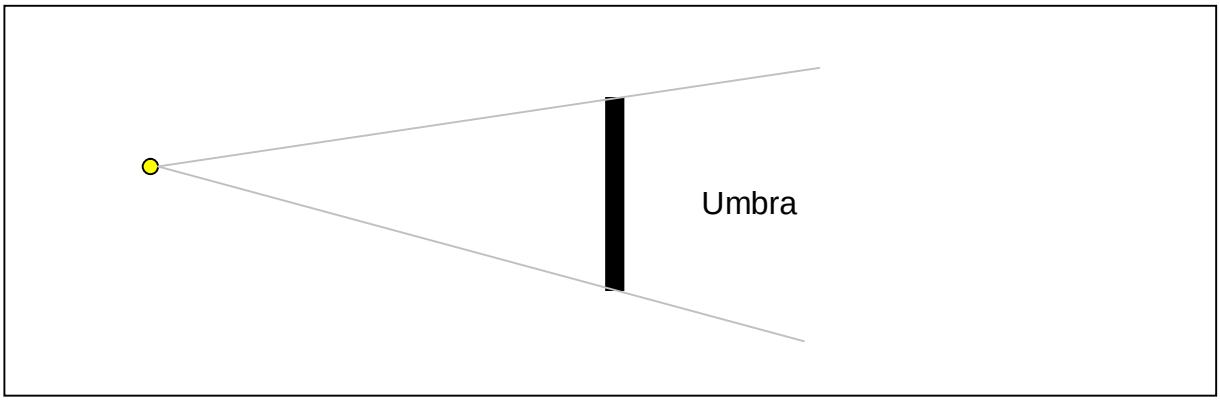

54.2 The sun is much larger than the earth. Draw a diagram showing the shape of the earth's umbra and penumbra.

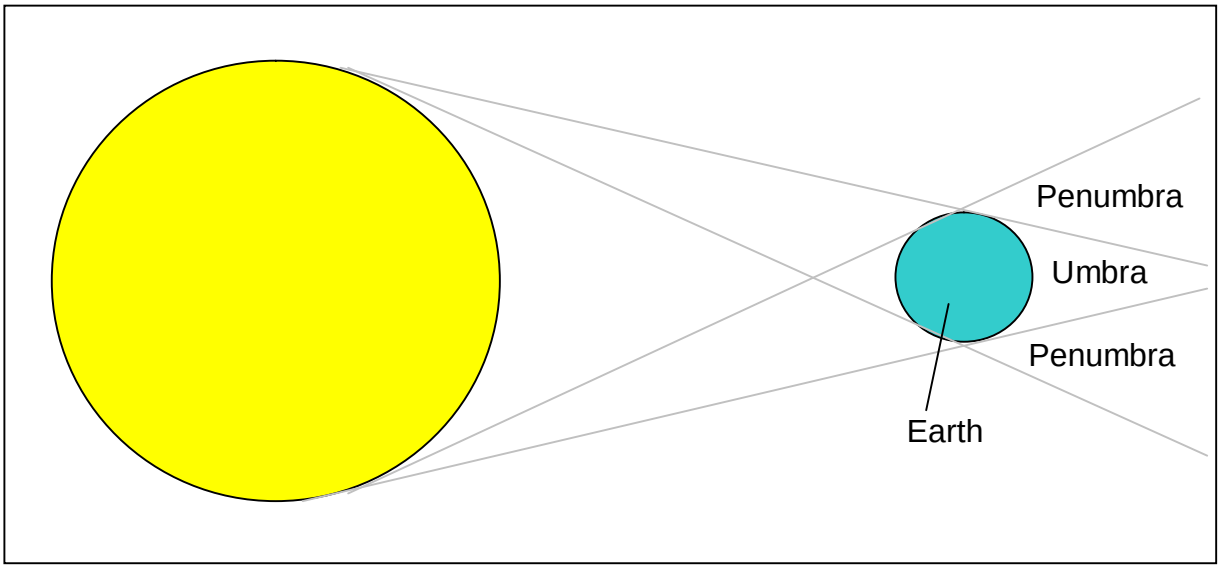

54.3 Will it ever be possible for the moon to totally eclipse (cover up) the sun from the whole of the earth's surface at one time?

No. The following picture shows a total eclipse of the sun by the moon. Only those observers inside of the shadow on the surface of the earth will see the eclipse of the sun. All observers in other locations will see a partial eclipse of the sun or no eclipse of the sun.

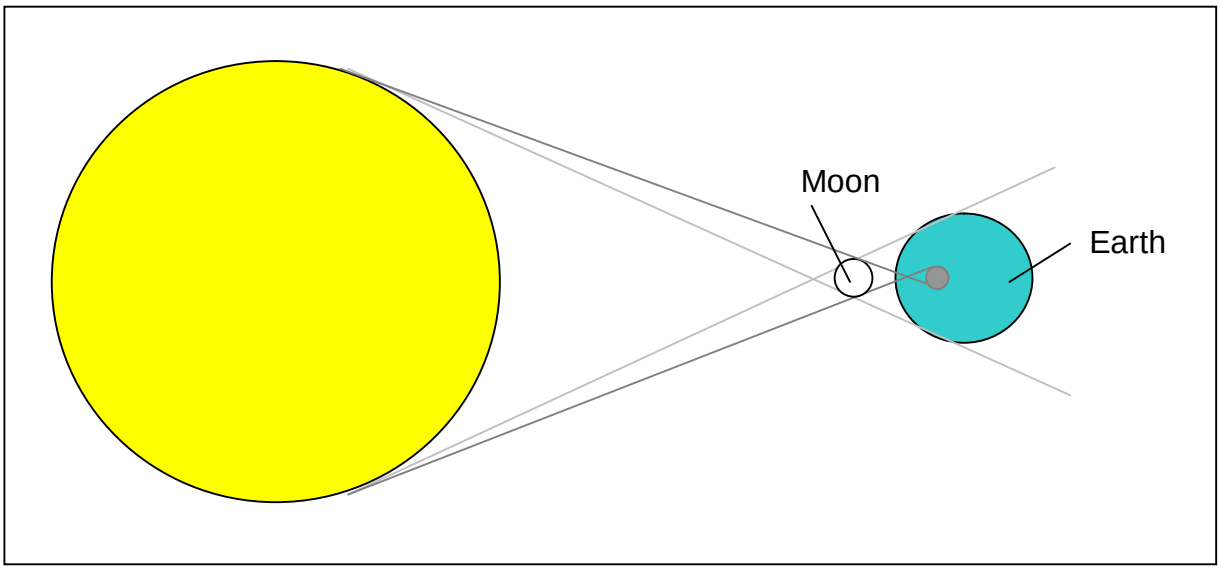

54.4 Sirius, the brightest star, is about 52 x 10^{12} miles away from the earth. If it were suddenly annihilated, how long would the light it produced continue to shine on the earth?

***The speed of light is 186 x 10^3 miles per second.**

$$\frac{52\times10^{12}\,miles}{1}\times\frac{1s}{186\times10^{3}\,miles}=279{,}569{,}892.5s\times\frac{1hour}{3{,}600s}\times\frac{1day}{24hours}=3{,}235days.$$

$$3{,}235days\times\frac{1year}{365days}=8.86\,years.$$

54.5 Why is a room with white walls much lighter than a similar room with black walls?

Light is almost completely and diffusely reflected from white walls, and almost completely absorbed by black walls.

54.6 If the word “white” be painted with white paint across the face of a mirror and held in the path of a beam of sunlight entering a darkened room, in the middle of the spot on the wall which receives the reflected beam, the work “white” will appear in black letters. Explain.

The white letters diffuse the sunlight falling on them throughout the room. The silvered surface of the mirror reflects the sunrays parallel to another on the wall. Because the “silver-reflected” rays are more intense than the “white-reflected” rays, the word “white” on the wall appears to be dark.

54.7 Compare the reflection of light from white blotting paper with that from a plane mirror. Which of these objects is more easily seen from a distance, and why?

Light reflected from a mirror can be seen better from a distance because these rays are *more intense* than those diffusely reflected rays coming from white blotting paper, which are *much less intense*.

54.8 Devise an arrangement of mirrors by means of which you could see over and beyond a high stone wall or trench embankment. This is a very simple form of periscope.

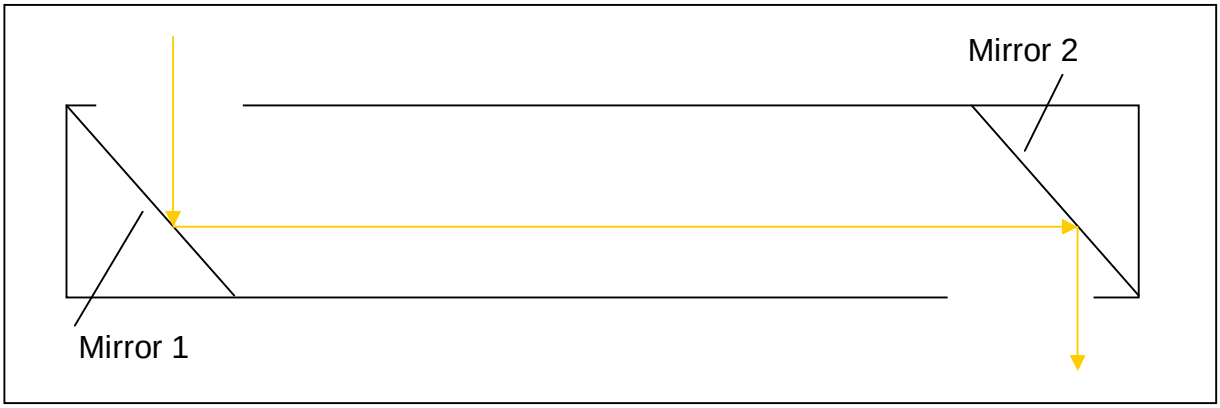

54.9 Draw diagrams to show in what way a beam of light is bent (A) in passing through a prism and (B) in passing obliquely (at an angle) through a plate glass window.

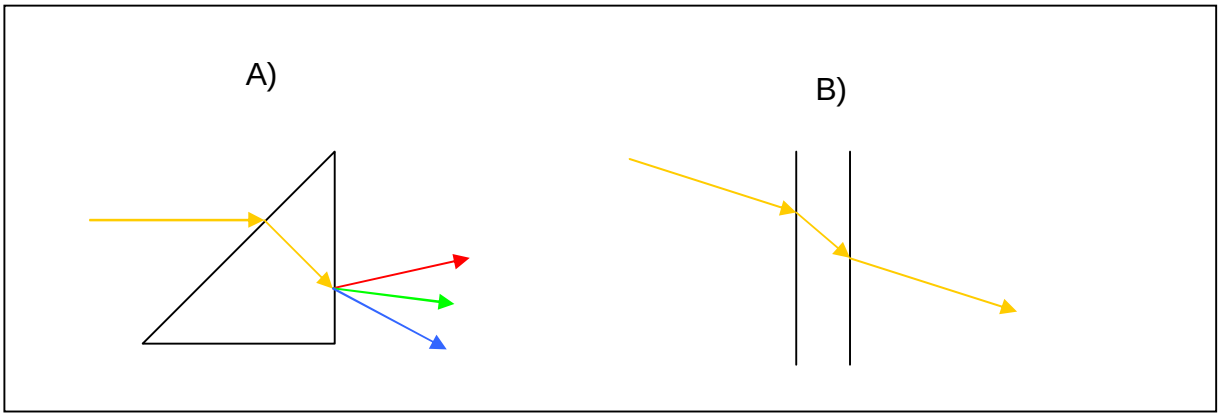

54.10 Explain the effect of the anti-glare “lens” of an automobile headlight.

Prismatic surfaces are built into the outer surface of the lens, which cause the light from the automobile lamp filament to be diffused and directed toward the road surface. The light reaching the eyes of a driver in an approaching vehicle is much less intense than would otherwise be the case. This reduces the possibility of glare and temporary visual impairment affecting other drivers.

54.11 The moon has practically no atmosphere. We know this because when a star appears to pass behind the moon, there is no decrease or increase in its apparent velocity while it is disappearing or coming into view again. If the moon had an atmosphere, like the earth, explain how this would affect the apparent velocity of the star at both of these times.

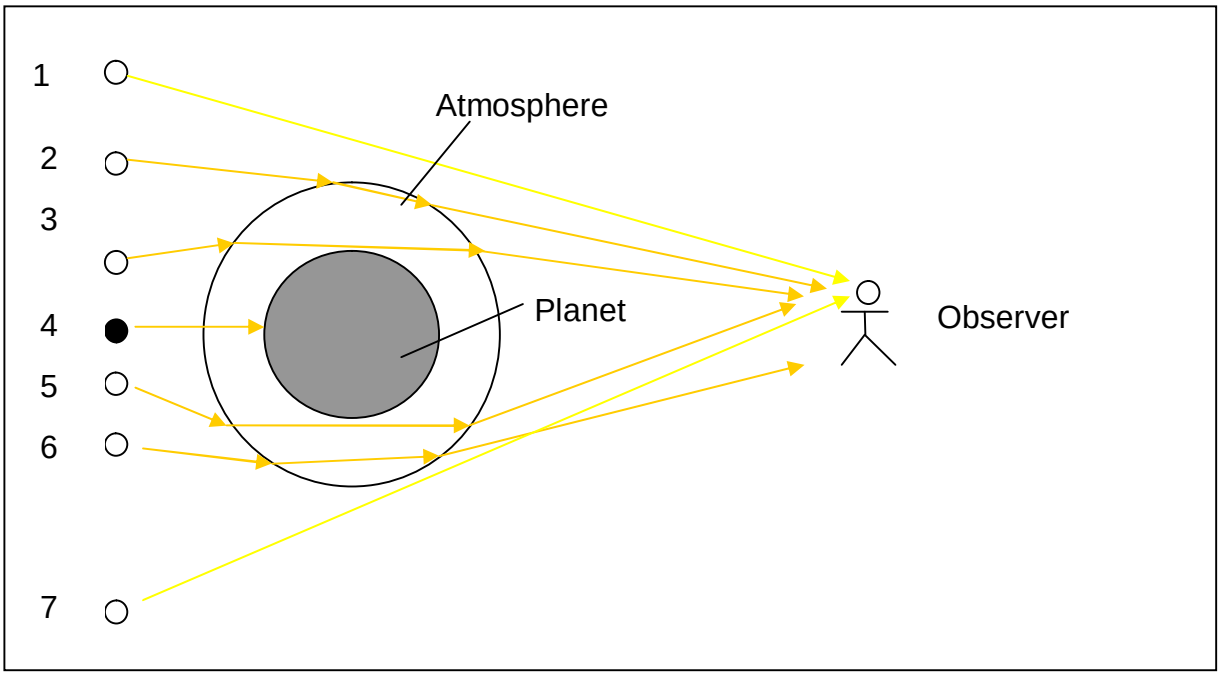

The star moves from top to bottom through seven positions in the picture. The atmosphere of the planet serves as a lens and bends the rays of the light coming from the star as they pass through the atmosphere. The light from the star reaches the observer directly (1). The light enters the atmosphere of the planet, which bends the rays toward the observer; the observer perceives this as a “slower” movement of the star (2). The light is bent so far that the star can still be seen by the observer (3). The light is blocked from the observer by the planet (4). The light is now bent so that

the observer “sees” the star earlier than he normally would have (5). The light is bent away from the observer; the observer perceives this as a “faster” movement of the star (6). The light from the star no longer passes through the planet’s atmosphere; the observer “sees” the star moving at its normal speed again (7).

***If a planet has an atmosphere, we will see an apparent <u>decrease</u> in the speed of a star moving behind the planet as the star approaches and then disappears behind the planet. We will see an apparent <u>increase</u> in the speed of the star moving behind the planet as the star again becomes visible and leaves the planet. Shortly afterward, the speed of the star will appear normal again.**

54.12 If a penny is placed in the bottom of a vessel in such a position that the edge just hides it from view, it will become visible as soon as water is poured into the vessel. Explain.

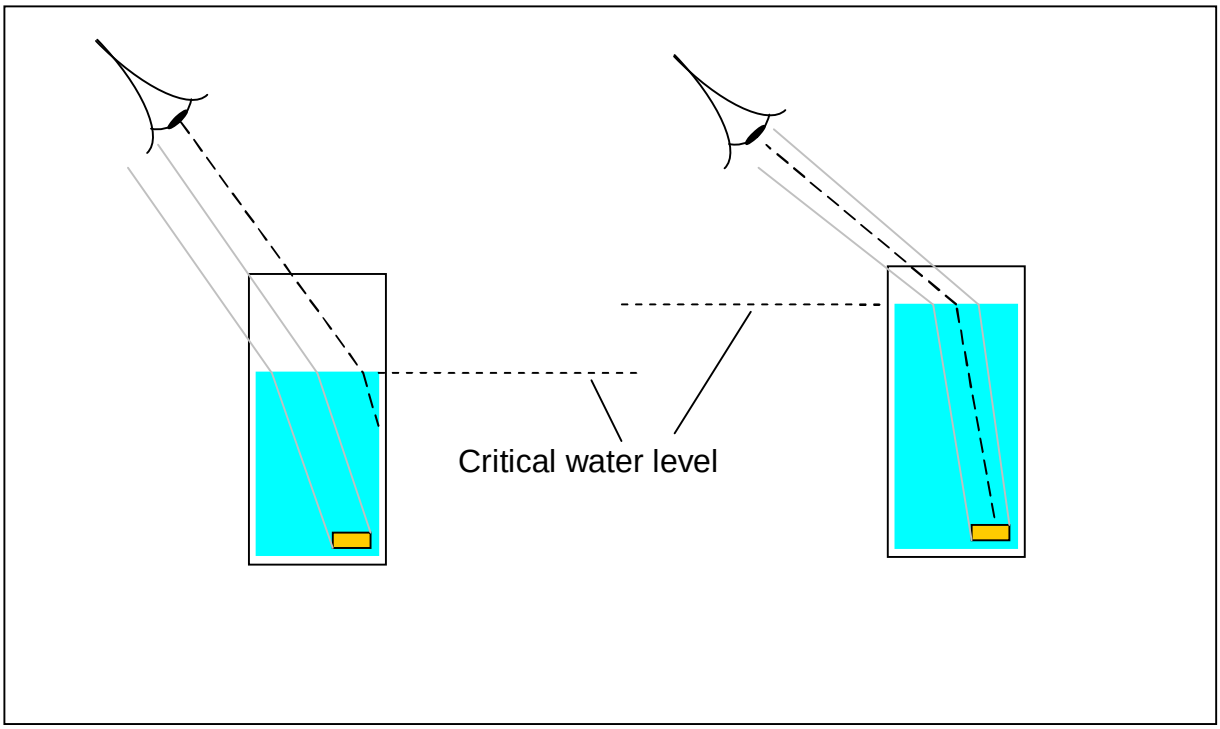

The critical water level at the left in the picture does not allow the observer to see the penny. Raising the water level raises the light refracted from the penny into the view of the observer, who can now see the penny in the water.

54.13 A stick that is held in water appears bent. Explain.

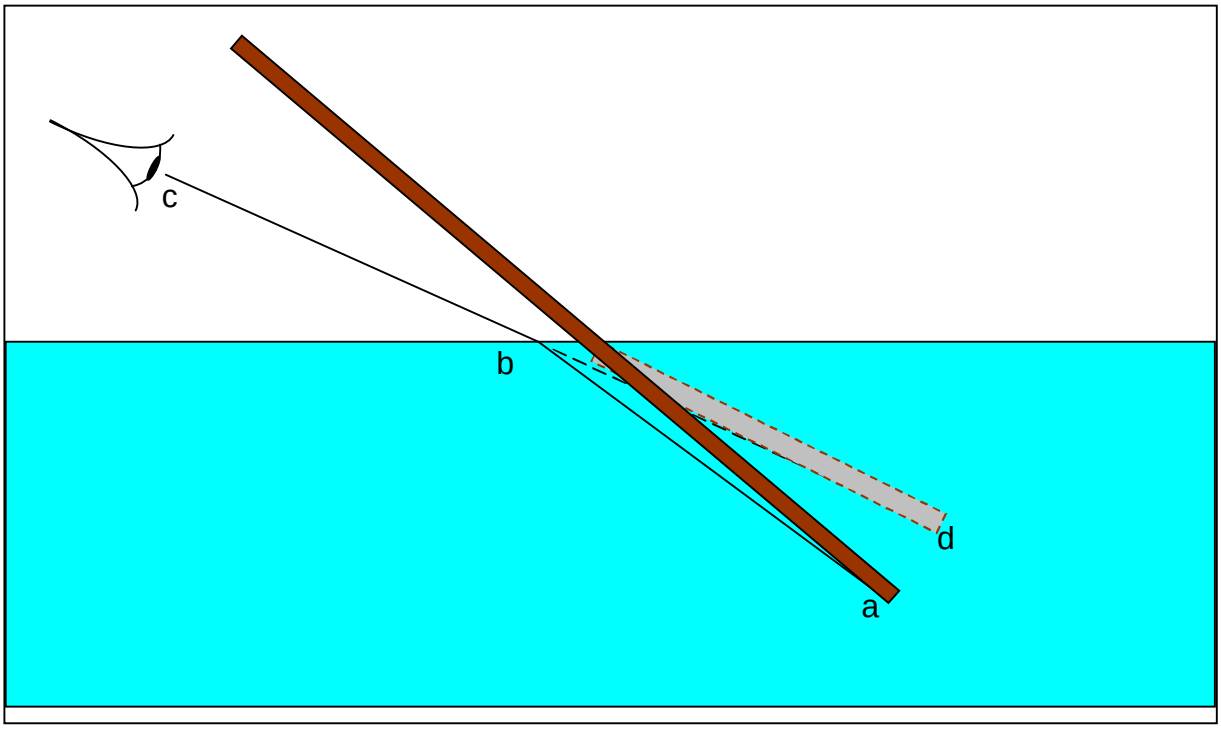

The light reflected under water from point a on the brown stick is bent (refracted) at the water's surface at point b and travels from point b toward the eye, point c.

The eye sees point a on the stick in the direction from c to b at a different location in the water than it really is, point d.

This is true of every point on the part of the stick under water.

The observer sees the brown stick as being "bent" under the water (shown as the grey area in the picture).

54.14 A glass prism placed in the position shown is the most perfect reflector known. Why is it better than an ordinary mirror?

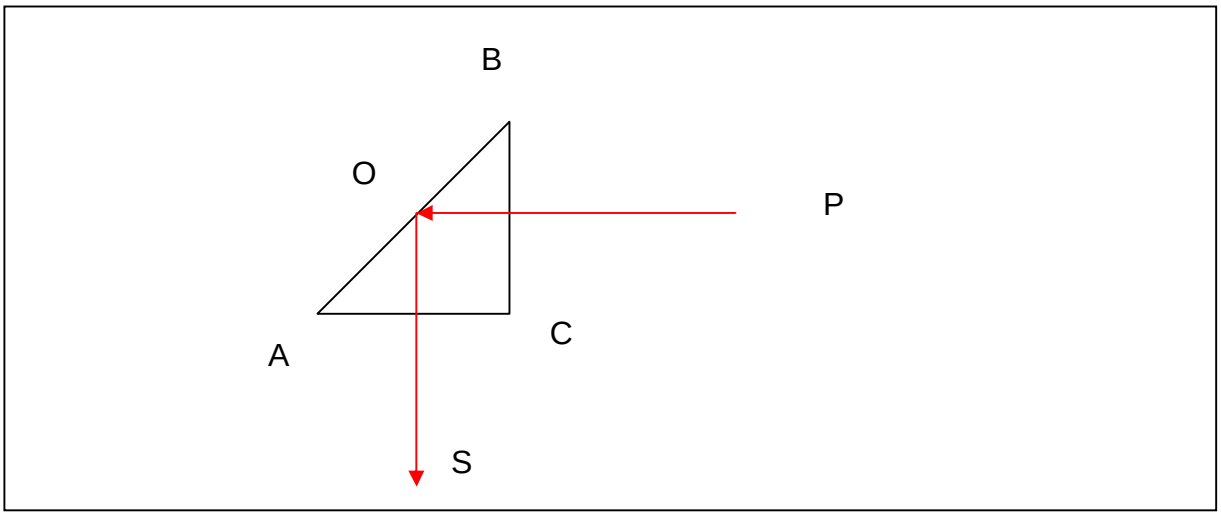

The incident light beam strikes the glass surface BC at a 90° angle; all of the light in the incident light ray PO enters the glass in the prism and strikes the surface AB at an angle of 45°. The prism is made of a glass that has a critical angle of greater than 45°. Therefore, all of the light in the light ray from P to O will be retained inside of the glass of the prism, and subsequently will be reflected from O to S, passing through

the surface AC at an angle of 90°. All of the light in the incident light beam PO is contained in the reflected light beam OS.

An ordinary mirror is made of a piece of glass that is silvered on its backside. The light going through this plate of glass moves from the air into the glass, a substance in which the light travels at a slower speed than in air. Not all of the light in the incident light beam strikes the glass of the mirror at a 90° angle. When the light beam exits the mirror it will therefore be refracted (bent), and some of the light will be lost from the incident light beam in the light beam reflected from the mirror.

54.15 Diagonal eyepieces containing a right-angle prism of crown glass are used on astronomical telescopes to view celestial objects at a high altitude. Explain.

The prisms retain more of the scarce light obtained (received) from celestial bodies at high altitudes, and distort the beam less than would be the case if mirrors were to have been used.

54.16 Explain why a straight wire seen obliquely (at an angle) through a piece of glass appears broken.

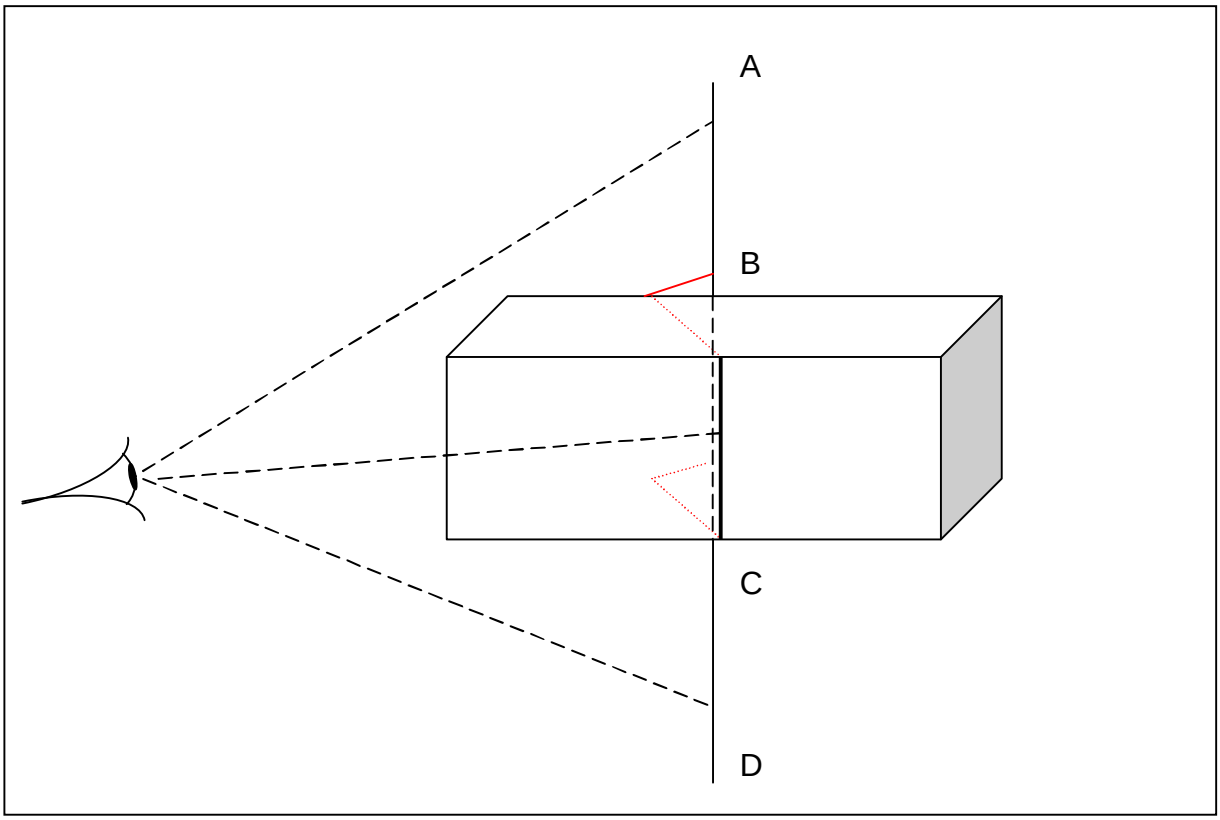

The eye can see the wire directly from A to B and from C to D. The portion of the wire from B to C is blocked by the glass. The light reflected from the wire part B to C is refracted (bent) as it goes from the air into the glass as shown in the picture in red. When this light comes out of the glass it is at a position that is shifted to the right of the original wire as seen by the observer.

54.17 The earth reflects sixteen times as much light to the moon, as the moon does to the earth. (A) Trace from the sun to the eye of an observer the light by which the observer is able to see the dark part of the “new” moon. (B) Why can we not see the dark part of a third-quarter moon?

The light reflected from the earth to the dark side of the third quarter moon is not reflected back toward the earth. We see the part of the third quarter moon that reflects the sunlight from the moon to the earth (only the bright side of the moon).

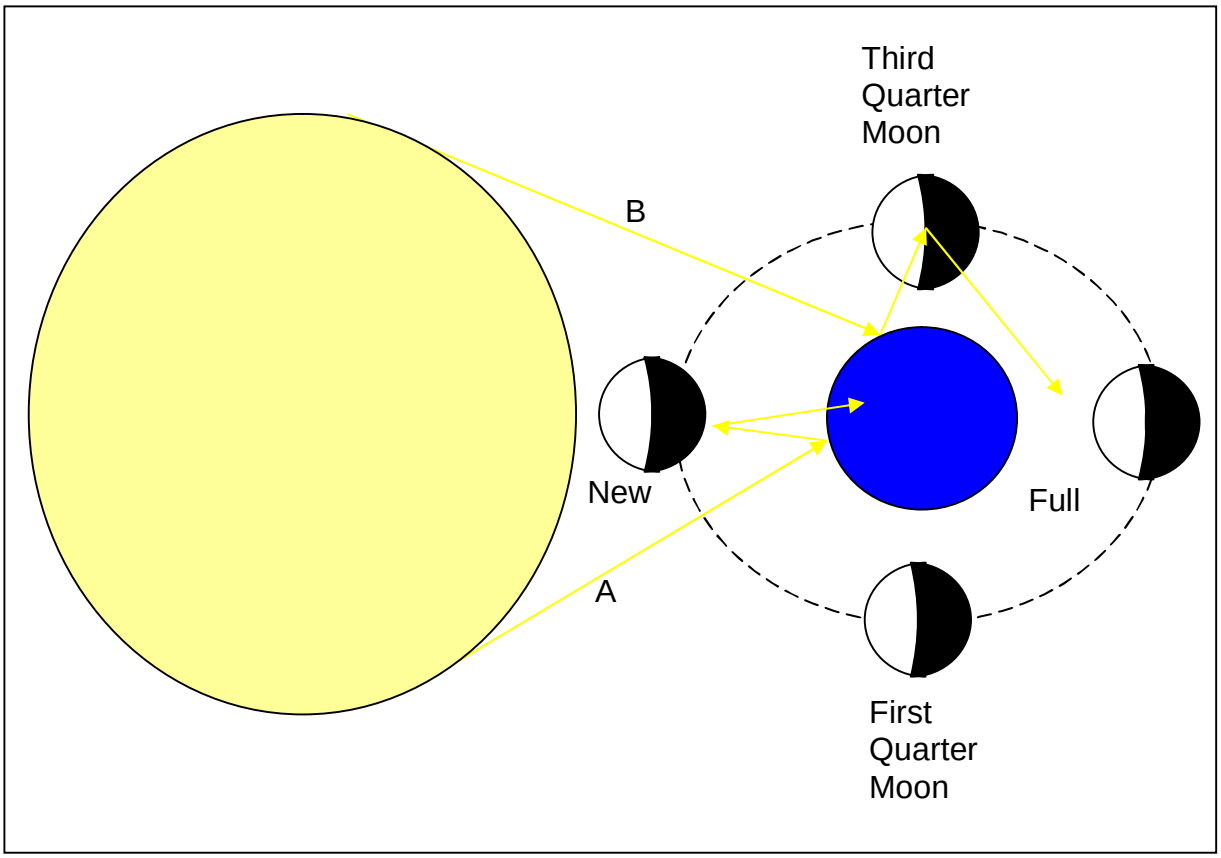

55. THE NATURE OF LIGHT

55.1 Explain the difference between candle power, intensity of light, and intensity of illumination.

Candle power earlier described the light that is emitted by one candle.

The intensities of all sources of light were earlier expressed in candle power.

The intensity of light received one foot away from one candle was the intensity of illumination, which was earlier expressed in foot-candles.

Candle power has been replaced by the candela, abbreviated cd, which has become the fundamental international unit of luminous intensity. If a source of radiation of 540 x 10^{12} Hz is radiating at 1/638 Watt per steradian, it is producing an illumination of 1 candela, or 1 cd.

Radiant Intensity is the energy emitted each second per unit solid angle about a given direction.

Intensity of radiation is the energy flux (the number of photons or particles being emitted per unit area normal to a given direction of radiation propagation).

55.2 How many candles will be required to produce the same intensity of illumination at two meters distance that is produced by one candle at 30 centimeters distance?

The light intensity decreases with the square of the distance from the source. Two meters is $6\frac{2}{3}$ farther away from the candle than 0.3 meters. The radiation intensity caused by this one candle will be decreased by the square of this increased distance, to become $\left[\frac{20}{3}\right]^2$ =400/9=44.44 times weaker. It becomes necessary to use 45 candles to just exceed the same intensity of illumination at two meters away from the original candle, to provide the intensity of illumination the candle caused alone at 0.3 meters.

55.3 A 500 cd Lamp is placed 50 meters from a darkly shaded place along a street. At what distance would a 100 cd lamp have to be to produce the same intensity of illumination?

Let us call the distance we do not know X. The intensity of the 500 cd lamp is $\frac{500cd}{(50m)^2}$.

The intensity of the 100 cd lamp is $\frac{100cd}{(Xm)^2}$. These two intensities are to be equal to each other.

$$\frac{500cd}{(50m)^2} = \frac{100cd}{(Xm)^2} \Rightarrow (Xm)^2 = \frac{100cd}{500cd} \times \frac{(50m)^2}{1} \Rightarrow (Xm)^2 = 500m^2 \Rightarrow Xm = 22.36m.$$

55.4 If a 2 cd Light at a distance of 1 ft gives enough illumination for reading, how far away must a 32 cd lamp be placed to cause the same illumination?

Let us call the distance we do not know X. The intensity of the 2 cd lamp is $\frac{2cd}{(1\,ft)^2}$.

The intensity of the 32 cd lamp is $\frac{32cd}{(Xft)^2}$. These two intensities are to be equal to each other.

$$\frac{2cd}{(1\,ft)^2} = \frac{32cd}{(Xft)^2} \Rightarrow (Xft)^2 = \frac{32cd}{1} \times \frac{(1\,ft)^2}{2cd} = 16\,ft^2 \Rightarrow X = 4\,ft.$$

55.5 A photometer is placed between an arc light and an incandescent light of 32 cd. It is equally illuminated on both sides when it is 10 ft. from the incandescent light and 36 ft. from the arc light. What is the candle power of the arc?

Let us call the candle power of the arc we do not know X. The intensity of the 32 cd lamp is $\frac{32cd}{(10\,ft)^2}$. The intensity of the arc lamp is $\frac{Xcd}{(36\,ft)^2}$. These two intensities are equal to each other.

$$\frac{Xcd}{(36\,ft)^2} = \frac{32cd}{(10\,ft)^2} \Rightarrow Xcd = \frac{32cd}{1} \times \frac{(36\,ft)^2}{(10\,ft)^2} \Rightarrow Xcd = 414.7cd \cong 415cd.$$

55.6 A 5cd and a 30 cd source of light are 2 meters apart. At what position must a piece of paper be placed for both of its sides to be equally illuminated?

Let us call the distance that the 5cd light source is from the photometer, which we do not know, X. The distance of the 30 cd source must then be 2M-X away from the photometer.

$$\frac{5cd}{(Xm)^2} = \frac{30cd}{((2-X)m)^2} \Rightarrow ((2-X)m)^2 = \frac{30cd}{5cd} \times \frac{(Xm)^2}{1} \Rightarrow 4 - 4X + X^2 = 6X^2 \Rightarrow X = 0.46m.$$

If X = 0.46m, then the distance 2m-X = 1.54m.

55.7 If the sun were at the distance of the moon from the earth, instead of at its present distance, how much stronger would sunlight be on the earth?

The distance from the moon to the earth is 240,000 miles.
The distance from the sun to the earth is 93,000,000 miles.
The sun is therefore 387.5 times as far from the earth as the moon is.
If the sun were at the moon it would shine $(387.5)^2$ stronger than it does at its present position. The sun would shine 150,156.25 times as bright on the earth from the position of the moon. Life on the earth would obviously be impossible.

55.8 If a gas flame is 300 cm from a Rumford photometer, and a one candela source 50 cm away gives a shadow of equal intensity, what is the illumination of the gas flame?

Let us call the candle power of the gas flame, which we do not know, X. The intensity of the 1 cd source is $\frac{1cd}{(50cm)^2}$. The intensity of the gas flame is $\frac{Xcd}{(300cm)^2}$. These two intensities are to be equal to each other.

$$\frac{Xcd}{(300cm)^2} = \frac{1cd}{(50cm)^2} \Rightarrow Xcd = \frac{1cd}{1} \times \frac{(300cm)^2}{(50cm)^2} \Rightarrow Xcd = \frac{90000cm^2}{2500cm^2} = 36cd.$$

Another way to solve this problem is to notice that the gas flame is 6 times farther away from the photometer than the 1 cd source. At equal illuminations, then, the gas flame must have an illumination of $6^2 = 36$ times as much as the 1 cd source. This must be an illumination of 36cd.

55.9 Will a beam of light going from water into a piece of flint glass be bent toward or away from a perpendicular line drawn to the surface of the glass?

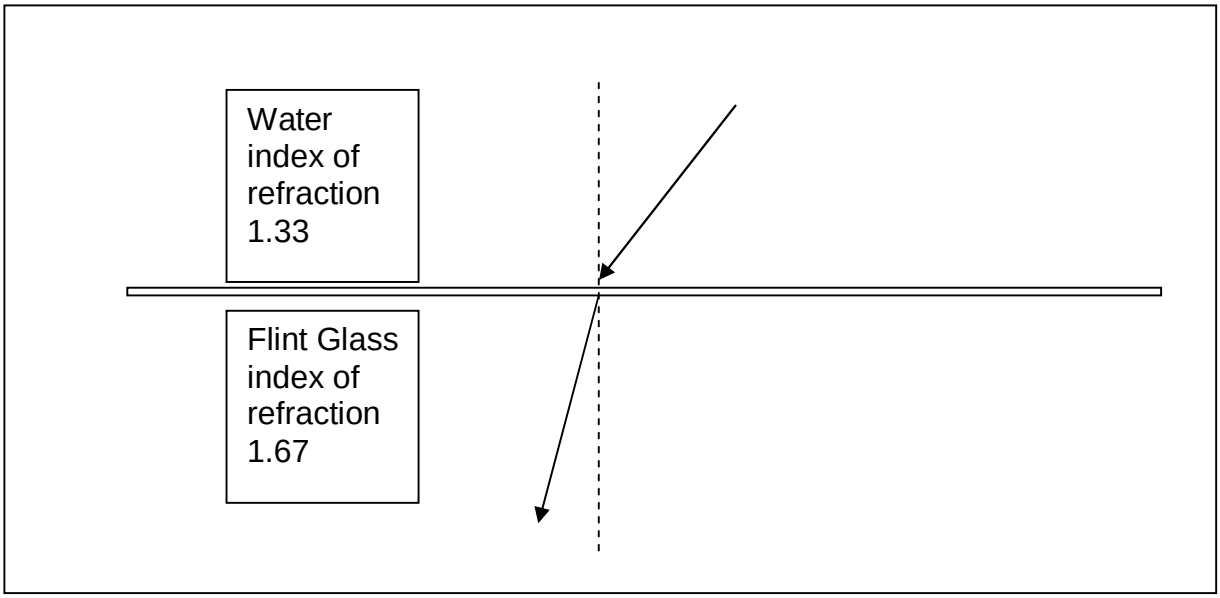

Light is bent more toward the perpendicular line to the boundary between two substances when it goes from a substance of lower refraction into a substance of higher refraction. Flint glass is more dense than water.

55.10 When light passes obliquely from air into carbon-bisulphide, it is bent more than when it passes from air into water at the same angle. Is the speed of light in carbon disulphide greater or less than in water?

Carbon-disulphide must be denser than water to cause a light beam to bend more toward the perpendicular line at the boundary of carbon-disulphide and air than at the boundary of water and air at the same incident angle. Therefore, the speed of light in carbon-disulphide is less than it is in water, because carbon-disulphide is denser than water. The speed of light in a material is slower, the denser the material becomes.

55.11 If light travels at a velocity of 186,000 miles per second in air, what is its velocity in water, in crown glass, and in diamond?

The refractive index of a substance is defined as the speed of light in air divided by the speed of light in the substance.

Substance	**Refractive Index**	**Speed of light in Miles per Second**
Air	1	186,000
Water	1.33	186,000/1.33 = 139,849
Crown glass	1.53	186,000/1.53 = 121,568
Diamond	2,47	186,000/2.47 = 75,303

56. IMAGE FORMATION

Summary of Laws for Lenses and Spherical Mirrors

1. Real images are always inverted, whereas virtual images are always erect.

The length of all images is given by the formula $\frac{L_O}{L_I} = \frac{D_O}{D_I}$.

L represents a length and D the distance from the center of the lens. The letter O designates the object. The letter I designates the image of the object.

2. Convex lenses and concave mirrors have the same optical properties.

(A) If the object is more distant from the lens than the principal focus, but not farther away from the lens than two times the principal focus, the image is real, enlarged and inverted. The image is diminished when the object is more than two focal lengths in front of the lens.

(B) If the object is closer to the lens than the principal focus length, the image is virtual, erect, and always enlarged.

3. Concave lenses and convex mirrors have the same optical properties. For any position of the object, the image is always virtual and diminished.

4. $\frac{1}{D_O} + \frac{1}{D_I} = \frac{1}{f}$.

D_O, the distance from the object, is always positive.

D_I, the distance from the image, is positive (on the opposite side of the lens as the object) for real images, and negative (on the same side of the lens as the object) for virtual images.

f, the focal length, is positive for converging systems (convex lenses and concave mirrors).

The focal length is negative for diverging systems (concave lenses and convex mirrors).

56.1 Show from a construction of an image that a man cannot see his entire length in a vertical mirror unless the mirror is at least half as tall as he is. Decide from a study of the figure whether the distance of the man from the mirror affects the situation.

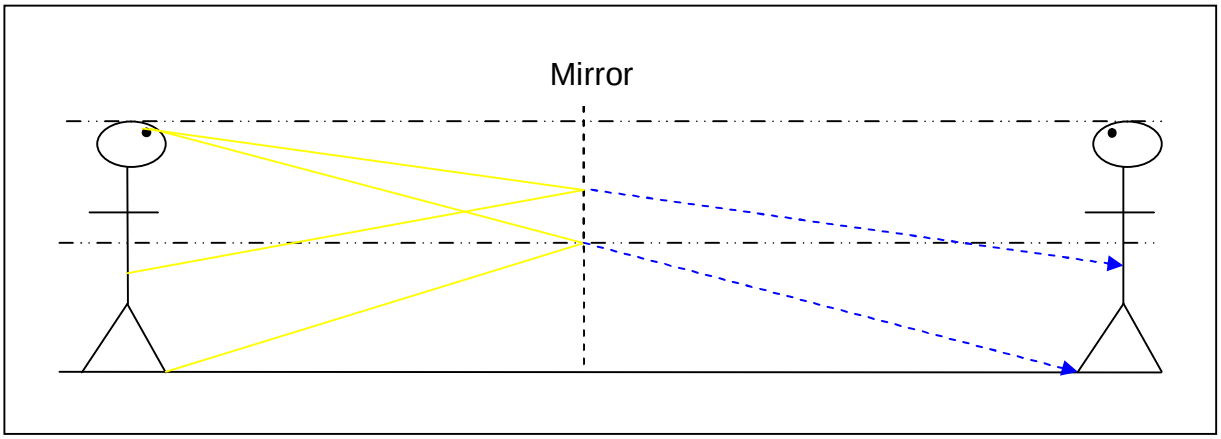

In the picture, the mirror is as tall as the man. The light from the man's feet (yellow) is reflected at a height equal to the midpoint between the man's feet and his eyes, because the light strikes the mirror at exactly the same angle as it leaves the mirror toward his eyes. The man "sees" the image of his feet as being at the end of the lower blue arrow. All other parts of his body will be reflected to his eyes in the upper half of the mirror. If the mirror were only half as tall as the man (the upper half of the mirror), the man could still see his entire body in the mirror.

The distance the man is away from the mirror does not change this situation.

56.2 A man is standing in front of a plane mirror which is very much taller than he is. The mirror is tipped toward him until it makes an angle of 45° with the horizontal. He sees his full length. What position does his image occupy?

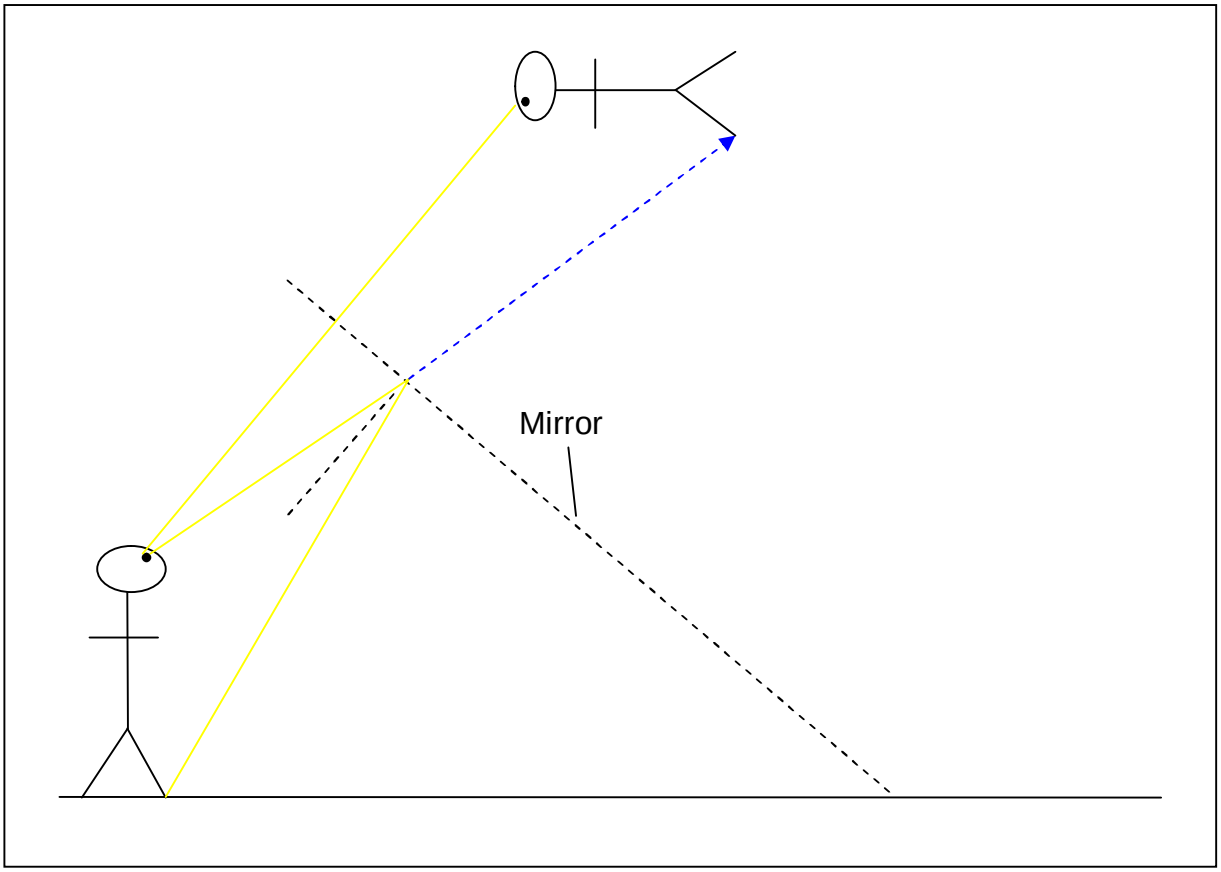

The man "sees" the image of his feet as being at the end of the blue arrow. The man sees his image above him in a horizontal position, parallel to the ceiling.

56.3 How tall is a tree 200 feet away if the image of it formed by a lens having a focal length of 4 inches is one inch long? Consider the image to be in the focal plane.

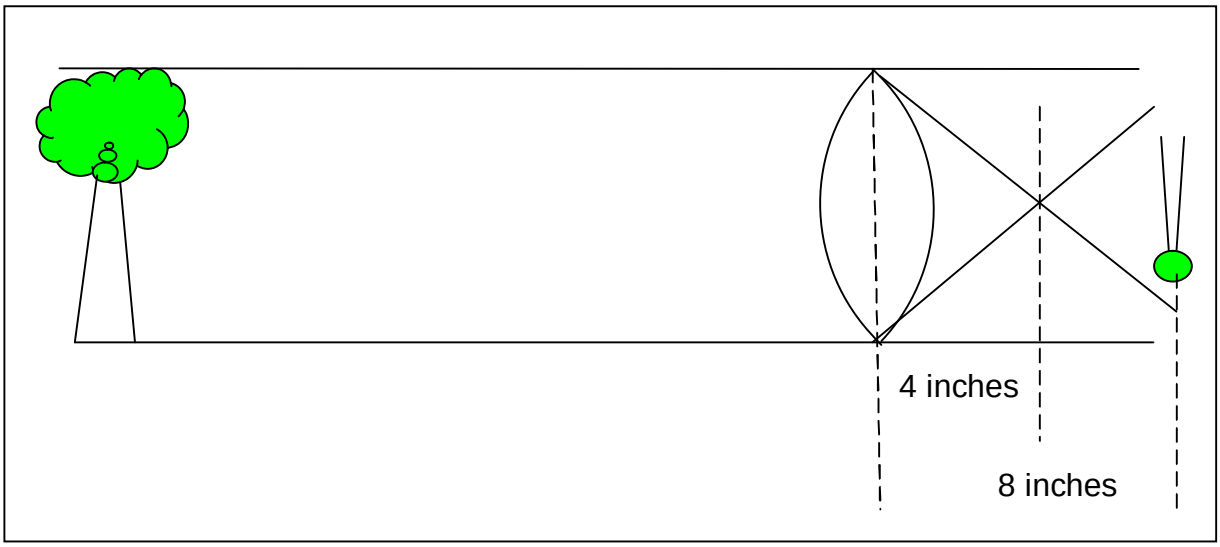

The focal length of the lens is 4 inches, so the distance of the image from the lens in the focal plane is twice that far, or 8 inches. The distance of the tree from the lens is 200 feet, which are equal to 2,400 inches. The length of the image is one inch.

$$\frac{L_O}{L_I} = \frac{D_O}{D_I} \Rightarrow L_{Tree} = \frac{D_O}{D_I} \times \frac{L_I}{1} = \frac{2400 inches}{8 inches} \times \frac{1 inch}{1} = 300 inches \Rightarrow \frac{300 in}{1} \times \frac{1 ft}{12 in} = 25\, ft.$$

The height of the tree is 25 feet.

56.4 How long an image of the same tree will be formed in the focal plane of a lens having a focal length of nine inches?

The focal length of the lens is 9 inches, so the distance of the image from the lens is twice that far, or 18 inches.

$$\frac{L_O}{L_I} = \frac{D_O}{D_I} \Rightarrow L_{\mathrm{Im}age} = \frac{D_I}{D_O} \times \frac{L_O}{1} = \frac{18 inches}{2400 inches} \times \frac{300 inches}{1} = \frac{18 in}{8} = 2\frac{1}{4} inches.$$

56.5 What is the difference between a real and a virtual image?

A real image is really where it appears to be. A virtual image is not where it appears to be.

56.6 When does a convex lens form a real, and when a virtual, image?

The light moves from the object, through the lens toward the eye. When the object is more distant than the principal focus length from a convex lens, but less than twice the distance of the focal length from the lens, the image is real and enlarged.

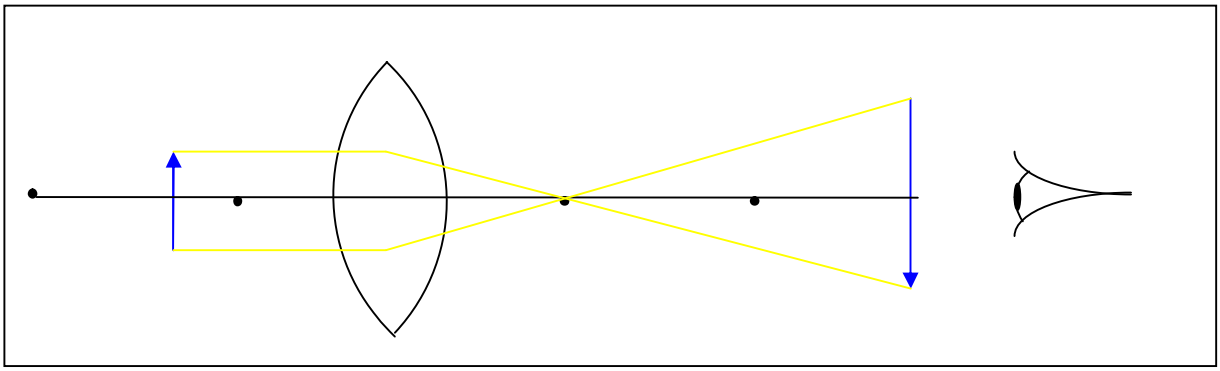

Because the lens is a convex lens and the image is real, the image will be inverted.

When the object is more distant than two principal focus lengths from the lens, the image is real, smaller than the object, and inverted.

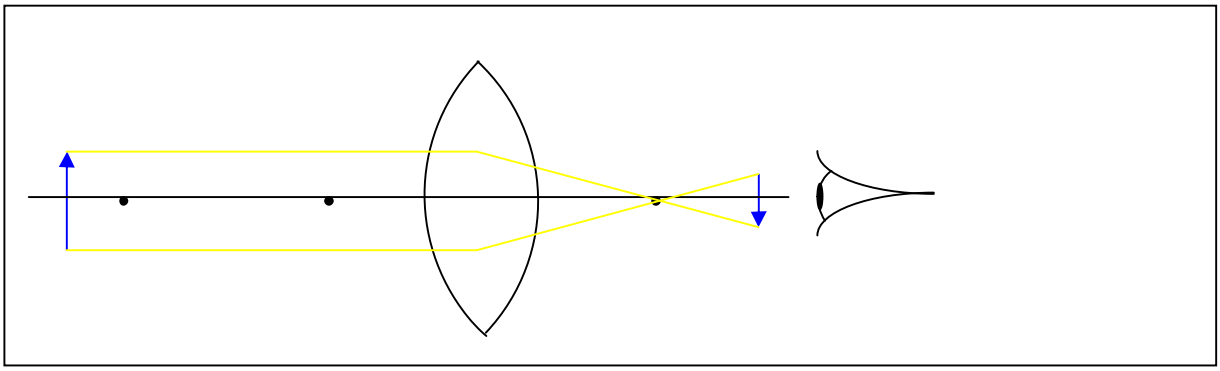

If the object is less than one focal length away from the lens, the image is virtual, erect, and enlarged.

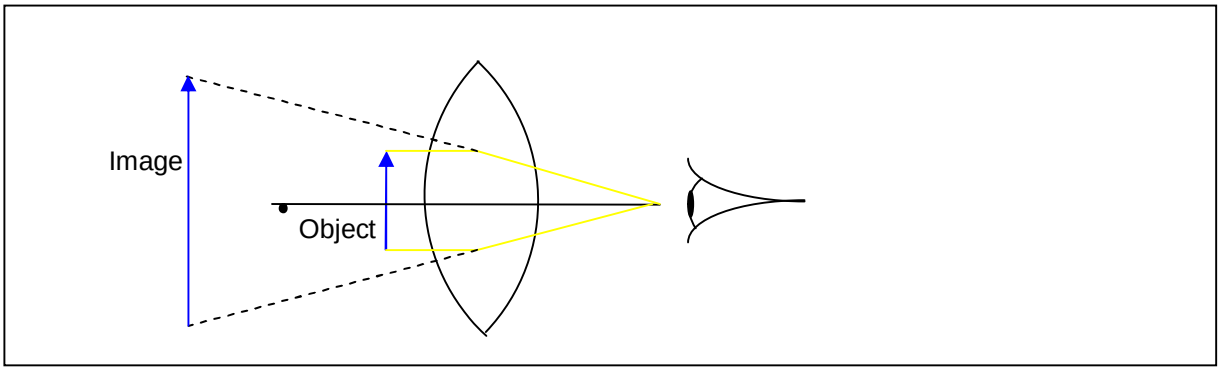

56.7 When a camera having a bellows is adjusted to photograph a distant object, what change in length of its bellows must be made to photograph a near object?

$\frac{1}{D_O}+\frac{1}{D_I}=\frac{1}{f}$. The focal length of the camera lens does not change. The inverse of the focal point $\frac{1}{f}$ is the sum of two fractions. If one of the fractions becomes larger, the other fraction must become smaller if the sum of the fractions is to remain the same.

If we are going to photograph a near object, the distance to the object will decrease, making the fraction $\frac{1}{D_O}$ larger. The other fraction $\frac{1}{D_I}$ must therefore become smaller, meaning the distance to the image D_I must increase. The distance D_I is the distance between the focal plane in the camera, and the center of the lens of the camera. The length of the bellows must be increased to move the lens farther from the focal plane in the camera.

56.8 Light rays diverge from a point 20 cm in front of a converging lens, whose focal length is 4 cm. At what point do the rays come to a focus?

The lens is convex, and the object is more than two focal lengths (8 cm) in front of the lens.

The image will be real, inverted, and diminished (smaller).

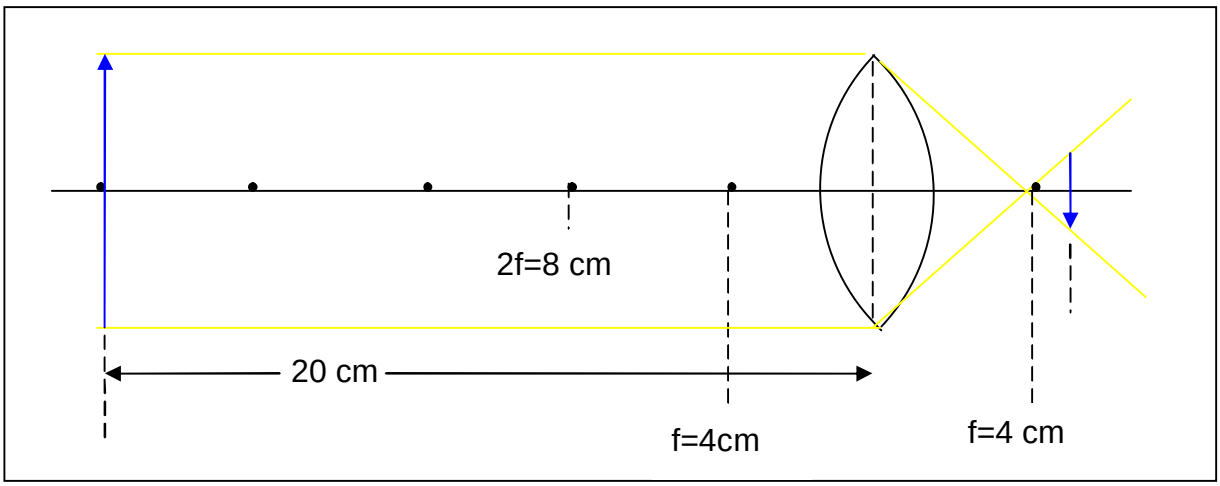

$$\frac{1}{D_O}+\frac{1}{D_I}=\frac{1}{f}\Rightarrow\frac{1}{D_I}=\frac{1}{f}-\frac{1}{D_O}=\frac{1}{4}-\frac{1}{20}=\frac{5}{20}-\frac{1}{20}=\frac{4}{20}=\frac{1}{5}\Rightarrow D_I=5cm.$$

The distance from the center of the lens to the image is 5 cm.

56.9 An object 2 cm long was placed 10 cm from a converging lens and the image was formed 40 cm from the lens on its other side. Find the focal length of the lens, and the length of the image.

D_O=10cm, D_I=40cm, $\frac{1}{D_O}=\frac{1}{10cm}=\frac{4}{40cm}$, $\frac{1}{D_I}=\frac{1}{40cm}$

$$\frac{1}{D_O}+\frac{1}{D_I}=\frac{1}{f}\Rightarrow\frac{1}{f}=\frac{1}{D_I}+\frac{1}{D_O}=\frac{4}{40}+\frac{1}{40}=\frac{5}{40}=\frac{1}{8}\Rightarrow f=8cm\Rightarrow 2f=16cm.$$

The object is placed 10 cm from the lens, so it is between one and two focal lengths in front of a convex lens. The image will be real, inverted, and enlarged.

L_O=2cm.

$$\frac{L_o}{L_I}=\frac{D_0}{D_I}\Rightarrow L_I=\frac{L_o\times D_I}{D_o}=\frac{2cm\times 40cm}{10cm}=\frac{80}{10}\times\frac{cm}{cm}\times\frac{cm}{1}=8\times 1\times cm=8cm.$$

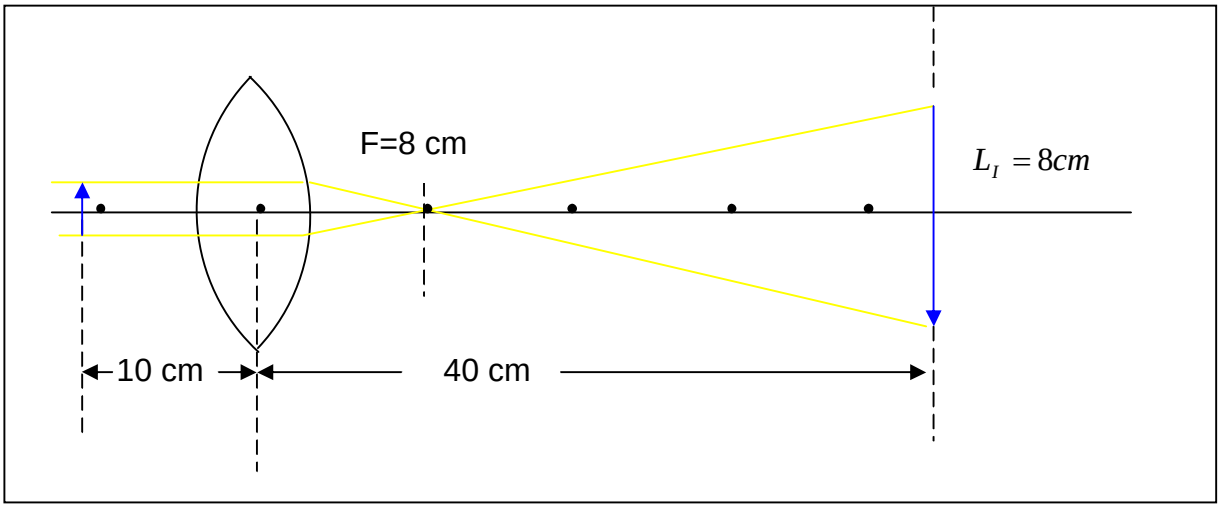

56.10 An object is 15 cm in front of a convex lens of 12 cm focal length. What will be the nature of the image, its size, and its distance from the lens?

The object is between one and two focal lengths before the convex lens. The image will be real, inverted, and enlarged.

$$\frac{1}{D_O}+\frac{1}{D_I}=\frac{1}{f}\Rightarrow\frac{1}{D_I}=\frac{1}{f}-\frac{1}{D_O}=\frac{1}{12}-\frac{1}{15}=\frac{15-12}{15\times12}=\frac{3}{15\times12}=\frac{1}{15\times4}=\frac{1}{60}.$$

D_I, the distance of the image from the center of the lens, is 60 cm.

$$\frac{L_o}{L_I}=\frac{D_0}{D_I}\Rightarrow L_I=\frac{L_o\times D_I}{D_o}=\frac{L_O\times60cm}{15cm}=\frac{L_O}{1}\times\frac{60cm}{15cm}=\frac{L_O}{1}\times\frac{60}{15}\times\frac{cm}{cm}=L_O\times4\times1=4L_O.$$

$L_I = 4L_O$.

The size of the image will be four times as great as that of the object.

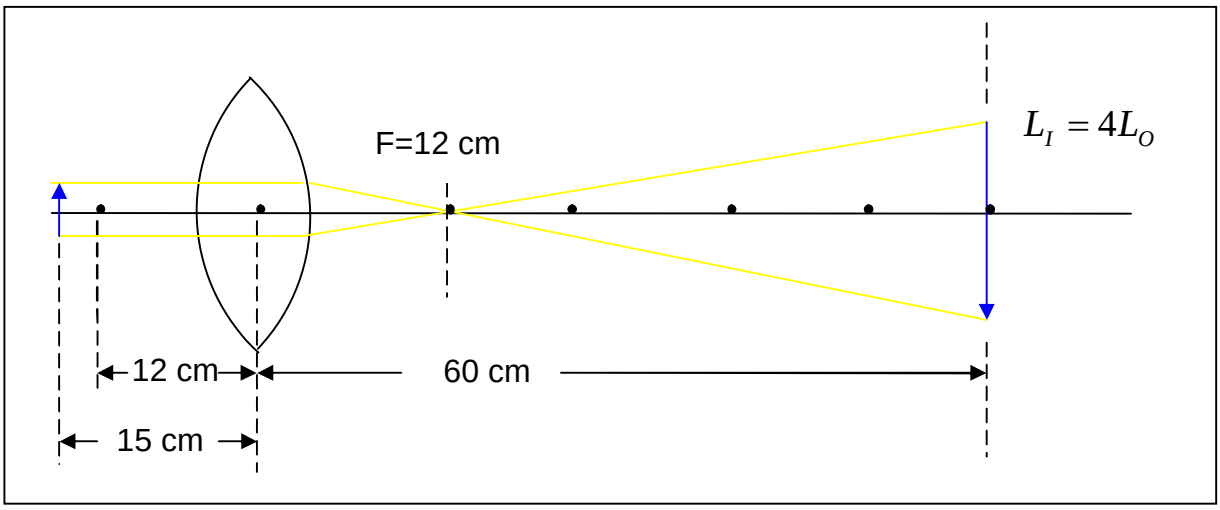

56.11 Can a convex mirror ever form an inverted image? Why?

No. A convex mirror always forms a virtual, erect, and diminished image behind the mirror. The image can lie from just behind the surface of the mirror to as far as the focal plane of the mirror.

All of these images are erect. An inverted image must lie beyond the focal plane of the mirror, which is not possible when using a convex mirror.

57. OPTICAL INSTRUMENTS

57.1 Why is it necessary for the pupils of your eyes to be larger in a dim cellar than in the sunshine?

The pupil of the eye appears black, and is surrounded by the iris, a colored ring, which makes the pupil larger to admit more light which allows us to see in dark environments (a dim cellar) or makes the pupil smaller to reduce the amount of light entering the eye in bright environments (strong sunshine).

Why does a photographer with a film camera use a small exposure time on dull days when photographing moving objects?

A photographer uses a small stop number on a film camera which causes a fast (a short) exposure time of the film to light. This “freezes” moving objects more readily, and leads to a clearer, sharper image. This also prevents streaking when fast moving objects are being photographed.

57.2 If a photographer wishes to obtain the full body, does he place the subject nearer to or farther from the camera than if he wishes to only photograph the head?

The photographer must place the subject farther away to photograph the entire body, than when photographing only the head.

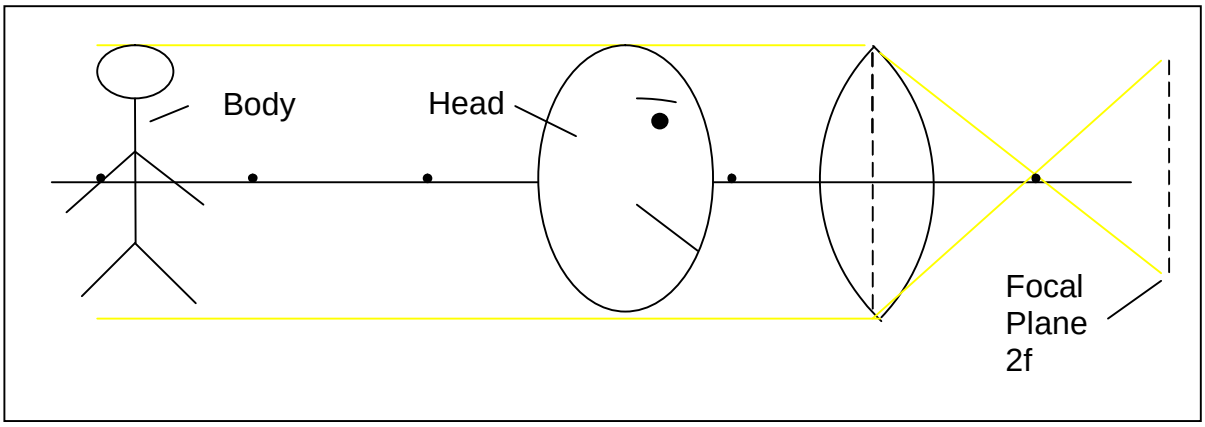

57.3 A child 3 ft high stood 15 ft from a camera whose lens had a focal length of 18 in (= 3/2 ft). What was the distance from the lens to the focal plane and the length of the child’s photograph?

The focal plane is twice the distance of the focal point from the center of the lens. 2 x 3/2ft = 3ft.

$$\frac{L_o}{L_I} = \frac{D_0}{D_I} \Rightarrow L_I = \frac{L_o \times D_I}{D_o} = \frac{3\,ft \times 3\,ft}{15\,ft} = \frac{9\,ft^2}{15\,ft} = \frac{3}{5}\,ft \Rightarrow \frac{3}{5}\,ft \times \frac{12in}{1\,ft} = \frac{36in}{5} = 7.5in.$$

57.4 If 20 s is the proper length of exposure when you are printing photographs using a light 8 inches from the printing frame, what length of exposure would be required in printing from the same negative when the same light is at a distance of 16 in from the printing frame?

The light intensity varies with the square of the distance away from the light source. Sixteen inches is twice as far away from the light source as eight inches. The light intensity is less at sixteen inches than at eight inches; it is $\frac{1}{2^2} = \frac{1}{2 \times 2} = \frac{1}{4}$ as intense.

The exposure time must therefore be four times as long at sixteen inches to obtain the same amount of light as an exposure at eight inches. An exposure time of $4 \times 20s = 80s$ is required.

57.5 If a 20 second exposure is correct at a distance of 6 in from an 8 candela electric light, what is the required time of exposure at a distance of 12 in from a 32 candela electric light?

Twelve inches is twice as far away from the light source. The light intensity from the *same* source would be $\frac{1}{2^2} = \frac{1}{2 \times 2} = \frac{1}{4}$ as intense. The 32 candela light is four times as intense as the 8 candela light, however, and will therefore produce the same intensity of light at 12 in as the 8 candela light produces at 6 in. The exposure time does not change, because the light intensity remains the same in both cases.

57.6 The image on the retina of a book held 1 ft from the eye is larger than the image of a house on the opposite side of the street. Why do we not judge that the book is actually larger than the house?

The viewing angle of the book between the two eyes is greater than that for the house. We learn in life by experience from this angle to judge the sizes of objects at various distances from us as being different than they visually appear.

57.7 What sort of lens is required to correct short-sightedness? What sort is required for long-sightedness? Explain using a diagram.

Nearsightedness: The image is formed before the retina and must be moved backward to be on the retina.

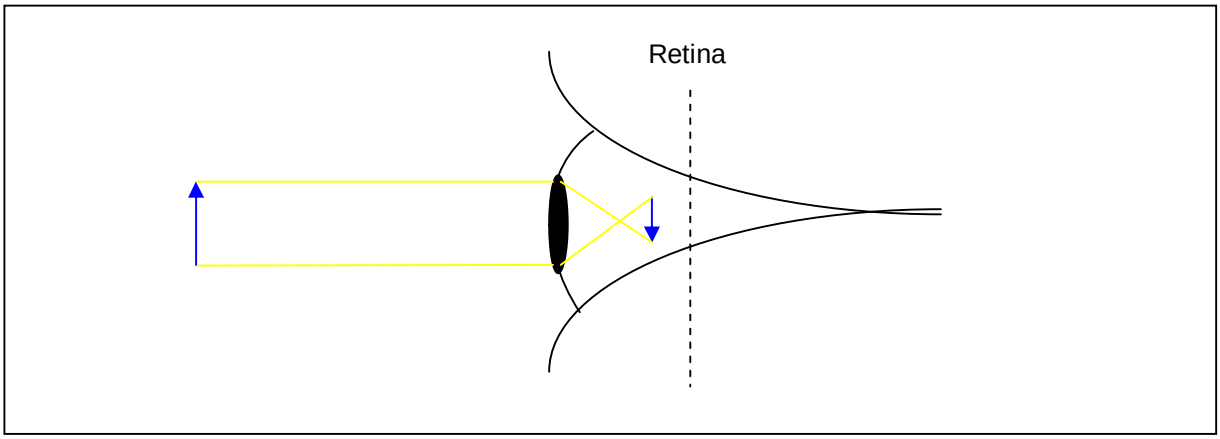

A lens that diverges light, a concave lens, corrects nearsightedness, as shown in the following picture.

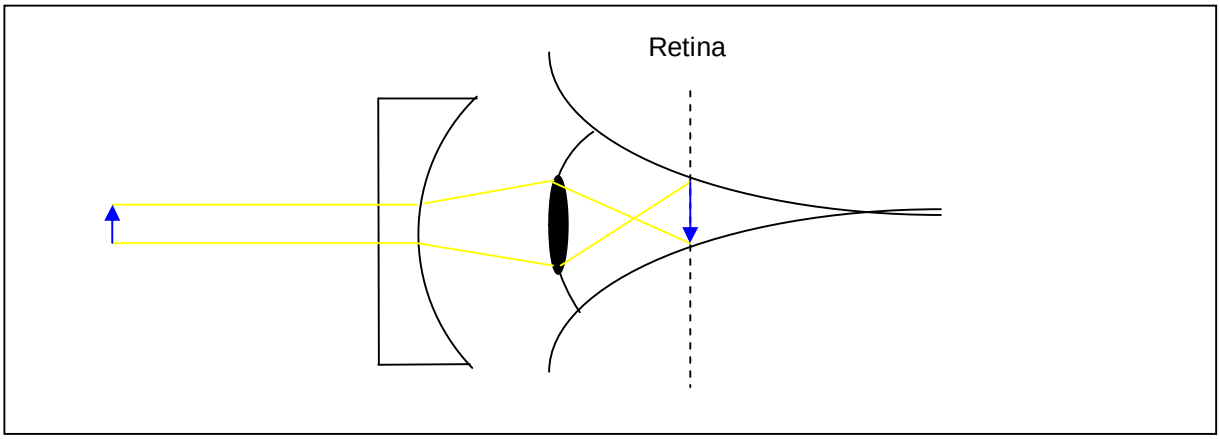

Farsightedness: The image forms behind the retina, and must be moved forward to be on the retina.

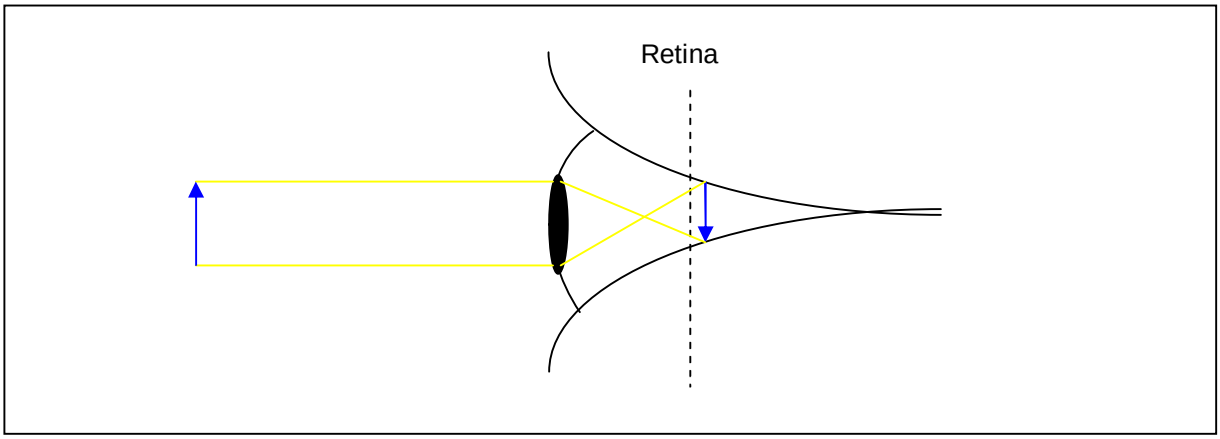

A lens that converges light, a converging lens, corrects farsightedness, as shown in the following picture.

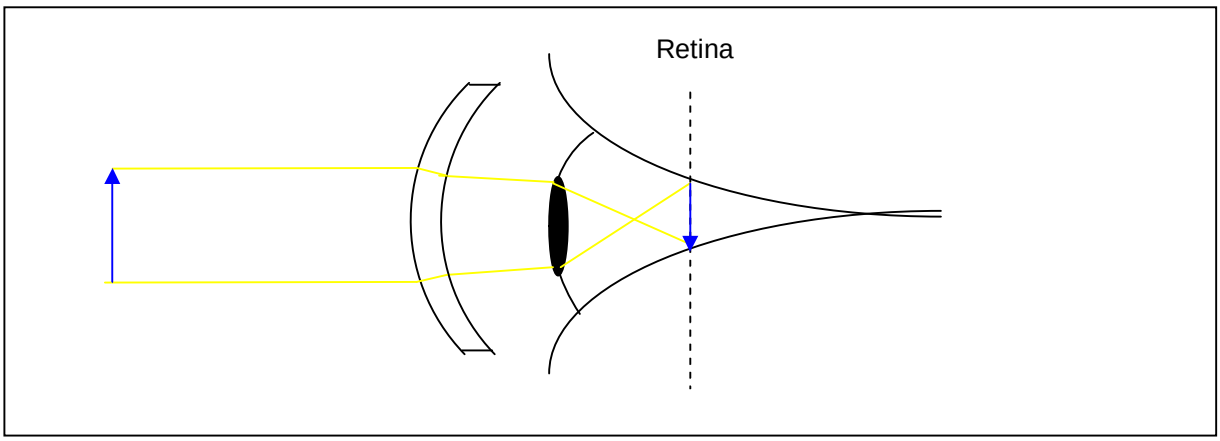

57.8 What is the magnifying power of a lens having a focal length of ¼ in when the lens is used as a simple magnifier?

The magnifying power of a lens or microscope is defined as the ratio of the angle actually subtended by the image when viewed through the instrument, to the angle

subtended by the object when viewed with the unaided eye at a distance of 25 centimeters. Therefore, a simple lens has a magnifying power of $\frac{25cm}{f_{lens}cm}$.

For a lens having a focal length of ¼ inch, the magnifying power is therefore $\frac{25cm}{1/4in} \times \frac{4}{4} = \frac{100}{1} \times \frac{cm}{in} = 100 \times \frac{cm}{in} \times \frac{1in}{2.54cm} = \frac{100}{2.54} \times \frac{in}{in} \times \frac{cm}{cm} = 37.87 \times 1 \times 1 = 37.87.$

57.9 If the length of a microscope tube is increased after it has been used to bring an object into focus, must the object be moved nearer to or farther from the lens to bring the object into focus again?

The magnifying power of a *telescope* is equal to the focal length of the objective lens divided by the focal length of the eyepiece lens, or mathematically $\frac{f_{ObjectiveLens}}{f_{EyepieceLens}}$.

The magnifying power of a *compound microscope* is equal to $\frac{LengthOfTube}{f_{ObjectiveLens}} \times \frac{25}{f_{EyepieceLens}}$.

The size of an image using a compound microscope is determined by the relationship $\frac{L_I}{L_O} = \frac{D_I}{D_O}$. The distances are measured from the center of the Objective Lens.

Increasing the length of the microscope tube causes an increase in D_I.

If the magnification $\frac{L_I}{L_O}$ is to remain the same, D_O must also be increased so that $\frac{D_I}{D_O}$ remains the same.

The object must be moved farther from the lens to bring the object into focus again.

57.10 Explain as well as you can how a telescope forms the image that you see when you look into it.

The parallel light rays that strike the lens of the eye meet at a focal point behind the eye's lens and travel farther to produce an inverted image on the eye's retina. This allows us to "see".

The objective lens of a telescope does the same thing, but its inverted image is turned upright again by the eyepiece lens.

The eye therefore "sees" as though no telescope were present, except that the telescope magnifies whatever is being seen through it.

57.11 Is the image on the retina erect or inverted?

The lens of the eye is a convex lens. The image on the retina of the eye is inverted, as shown in the following picture.

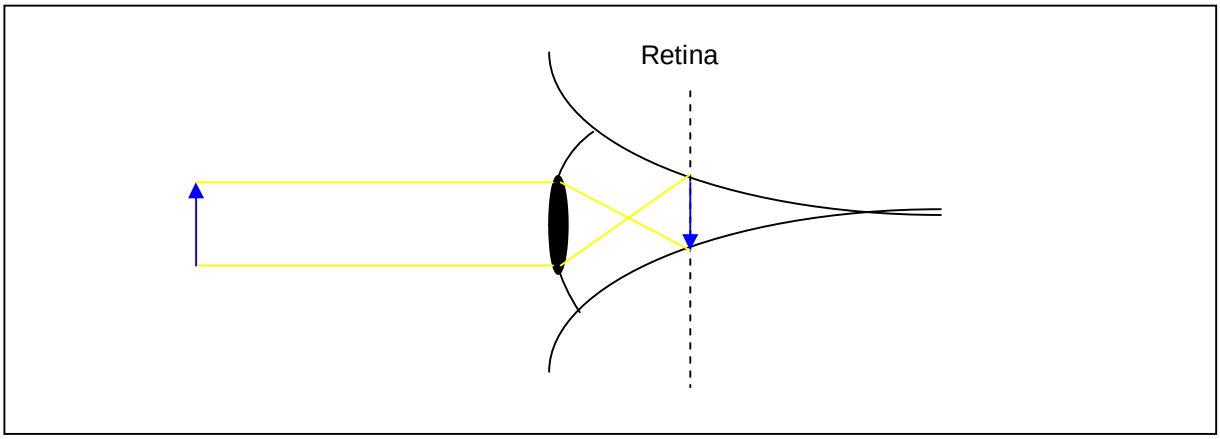
Retina

58. COLOR PHENOMENA

58.1 What determines the color of an opaque body?

The photons that are reflected from its surface determine the color of an opaque body.

What determines the color of a transparent body?

A transparent body has no color, because all photons pass through it and are not reflected toward our eyes.

What is the appearance of a bunch of green grass when illuminated by pure red light?

Black, because the photons having the energy level corresponding to red are not reflected from a green opaque surface.

58.2 What is white?

White is the impression of all visible photons impacting on the retina of our eyes simultaneously.

What is black?

Black is the absence of all visible photons entering the eye from some area of light source.

Explain why a block of ice is transparent while snow is opaque and white.

Ice and snow are both frozen water. They have very different crystalline structures, however. Ice reflects no photons in the visible spectrum, while snow reflects all photons in the visible spectrum simultaneously.

58.3 Why do white bodies look blue when seen through blue glass?

All photons in the visible spectrum except the photons having the energy level corresponding to blue are absorbed by the blue glass. Only the blue photons exit the blue glass and afterward strike the retina of the eye.

58.4 What color would a yellow object appear to have if looked at through a blue glass?

Black, because the photons having the energy level corresponding to yellow that are reflected from the object would be absorbed by the blue glass. No photons from this light source area would enter the eye.

58.5 A gas flame is distinctly yellow as compared with sunlight. What photons, then, must be comparatively few in the spectrum of a gas flame?

Photons having energy levels corresponding to the colors red and green through blue to violet would be practically missing.

58.6 Why does a dark blue object appear to be black when viewed by candle light?

Candle light is predominantly yellow. Photons having energy levels corresponding to the color yellow are absorbed by the dark blue object. No other photons are reflected

to the eye from this light source area (the object). The object therefore appears to be black.

58.7 Certain blues and greens can not be distinguished from another by candle light. Explain.

Candle light does not contain a strong concentration of photons corresponding to the colors blue and green.

The green photons having a mass slightly greater than the yellow photons, and the blue photons having a mass slightly greater than the green photons appear to be the same in the retina of the eye (no impact differentiation), when their concentrations in the reflected light are relatively weak.

58.8 Does blue light travel more slowly or faster in glass than red light?

The “blue” photons are refracted more in the glass (have a smaller angle of refraction) than the “red” photons. We know that this is true, because in the focal point of a lens, the focal point of the heavier mass photons (here blue) is slightly closer to the lens than the focal points of the lighter mass photons (here red). The distance between these focal points is very small.

Let us call the angle of refraction β. Because the angle of refraction of blue photons in glass is smaller than the angle of refraction of red photons in glass, the sine of the refraction angle is smaller for blue photons than for red photons passing through glass; mathematically:

$Sin(\beta_{BluePhotons}) \prec Sin(\beta_{\mathrm{Re}\,dPhotons})$.

The relationship of the speed of a photon in a substance to the speed of the same photon in a vacuum is given by the equation:

$\frac{Sin(\beta_{Vacuum})}{Sin(\beta_{Subs\tan ce})} = \frac{c_{vacuum}}{c_{subs\tan ce}}$. In our case, for glass: $\frac{Sin(\beta_{Vacuum})}{Sin(\beta_{Glass})} = \frac{c_{vacuum}}{c_{Glass}}$.

As the sine of the refraction angle in the glass decreases, the value of the fraction on the left side of the equation becomes more. The speed of the photons in the glass must also decrease on the right side of the equation to make the two fractions in the equation equal again.

The sine of the angle of refraction in glass decreases in going from red to blue light.

The speed of the light therefore decreases in the substance in going from red light to blue light.

The speed of the photons decreases in glass going from the lighter “red” photons toward the heavier “blue” photons.

59. SPECTRA

59.1 From the following table calculate how many wavelengths of red and of violet light there are to an inch.

Color	Wavelength in cm	Wavelength in nm
Red	0.000068 cm	680 nm
Yellow	0.000058 cm	580 nm
Green	0.000052 cm	520 nm
Blue	0.000046 cm	460 nm
Violet	0.000042 cm	420 nm

Red: 68 x 10^{-6}cm x $\frac{1in}{2.54cm}$ =26.77x10^{-6}inches. This is how long one wavelength of red light is. The number of wavelengths in one inch is $\frac{1in}{26.77\times10^{-6}in} = 37{,}355.$

Violet: 42 x 10^{-6}cm x $\frac{1in}{2.54cm}$ =16.53x10^{-6}inches. This is how long one wavelength of violet light is. The number of wavelengths in one inch is $\frac{1in}{16.53\times10^{-6}in} = 60{,}496.$

59.2 In what part of the sky will a rainbow appear if it is formed in the early morning?

In the picture, the sun has just appeared at morning, and is in the east. The sunlight that is reflected as a rainbow from the water droplets in the air must be reflected so that they fall at an angle of 40 to 54 degrees on a straight line between the sun and the earth at the point of observation. The man sees the rainbow in the west, as shown in the picture.

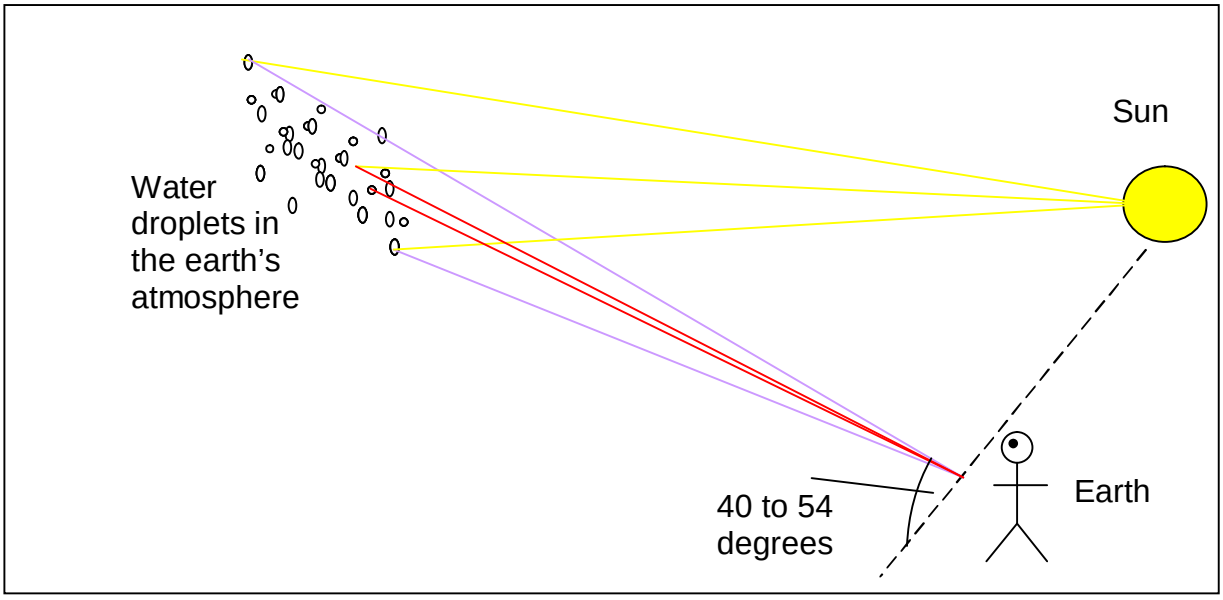

59.3 Why do we believe there is sodium in the sun?

The spectral line in the yellow light produced by a sodium light source is missing in sunlight reaching the earth.

It is therefore assumed that sodium gas in the sun's atmosphere absorbs photons corresponding to this light, preventing them from being radiated outward from the sun and reaching the earth.

59.4 What sort of spectrum should moonlight give (the moon has no atmosphere)?

The moon predominantly reflects sunlight toward the earth. Since the moon has no gasses to form an atmosphere, which would otherwise absorb some of the sun's photons, we expect the spectrum of the sunlight reflected from the moon to the earth to be the same as the sunlight reaching the earth directly from the sun.

59.5 If you were given a mixture of a number of salts, how would you proceed using a Bunsen burner, a prism, and a slit to determine whether there was any calcium in the mixture?

Heat the mixture of salts with a gas burner until the salt becomes incandescent and begins to give off a vapor of several gasses above it. The light given off by this vapor passes through the narrow slit, reaches the prism, is refracted by the prism, and is seen by the eye. If the eye "sees" a green image of the slit, calcium is probably present in the salt mixture, because green is a typical spectral line for calcium.

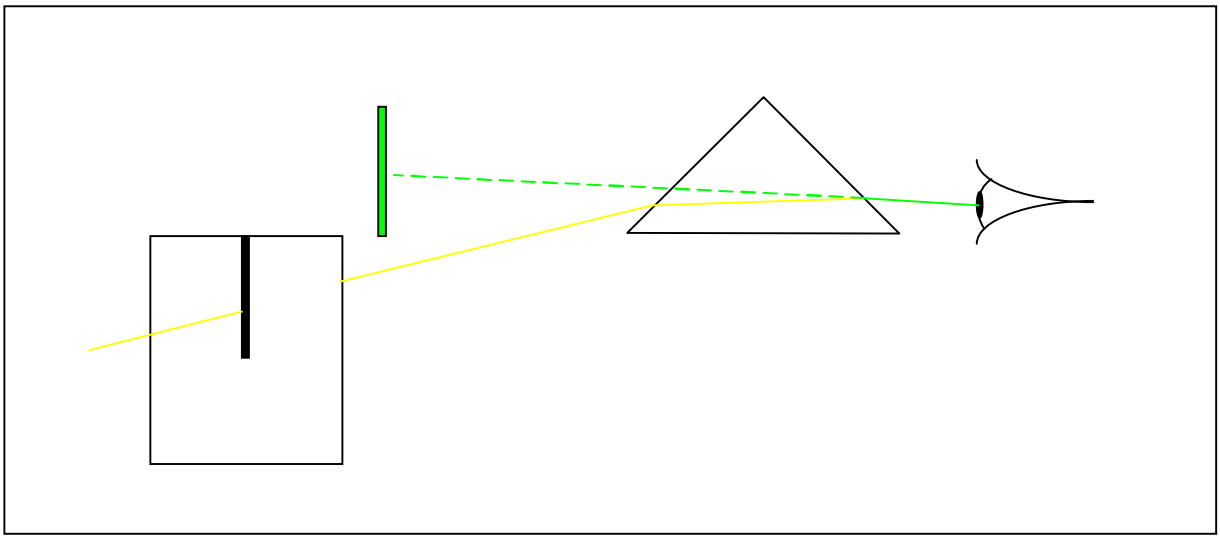

59.6 Draw a diagram of a slit, a prism, and a lens, so placed as to form a pure spectrum.

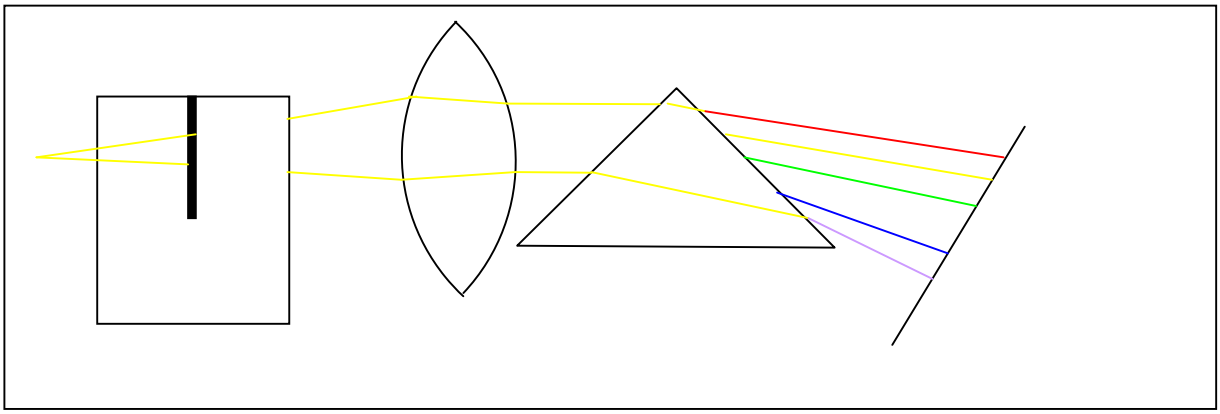

59.7 How can you show that the wave lengths of green and red lights are different, and how can you determine which one has the longer wavelength?

Allow sunlight to pass through green and red filters. Place a cylindrical soap film after the filters. The soap film acts as a double reflector; the left half appears red and the right half appears green. Place a lens after the soap film. The light from the soap film is refracted by the lens and lands on the screen. Two rows of light bands appear on the screen, one red on the left side and one green on the right side. The distance between two adjacent bands of the same color is always the same, and corresponds to one half of the wavelength of the color shown. This distance is longer for the red light than for the green light, so the red light has a longer wavelength than the green light. The red photons have less mass than the green photons, and produce a different interference pattern than the green photons.

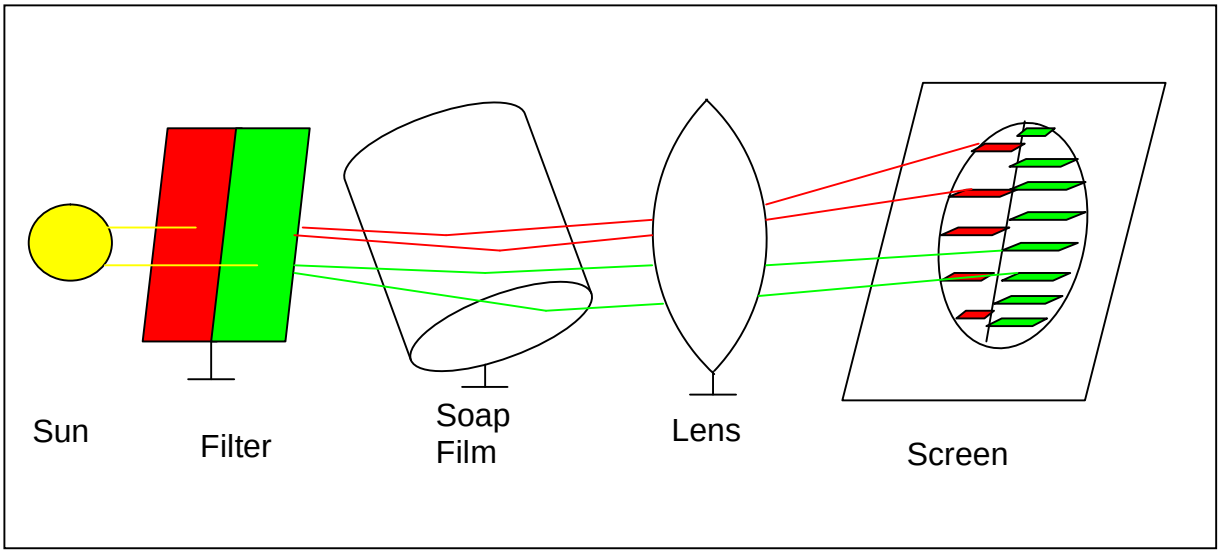

60. INVISIBLE RADIATIONS

60.1 The atmosphere is transparent to most of the sun's rays. Why are the upper regions of the atmosphere so much colder than the lower regions?

Heat is molecules in motion, or molecular motion. There are very many fewer molecules in a specified volume of space in the upper atmosphere than in that same volume of space near the earth.

Photons radiated outward from the sun strike few molecules in the earth's upper atmosphere, and increase the average molecular motion there only slightly.

As the photons travel deeper into the earth's atmosphere toward the earth they strike more and more molecules in the specified volume of space, and increase the molecular motion in that space closer to the earth appreciably. We sense this increased molecular motion in this air space as heat.

60.2 When a man is sitting in front of an open fire, does he receive most of the heat from the fire by conduction, convection, or radiation?

The man receives most of the heat from the open fire by radiation.

60.3 Sunlight, when coming to the eye travels a much longer path through the air at sunrise and sunset than it does at noon. Since the sun appears red or yellow at these times, what rays are absorbed most by the atmosphere?

The red and yellow photons have lighter masses than the rest of the photons in the visible light spectrum, and are refracted less than the other photons in the air on their longer journey through the earth's atmosphere at sunrise and sunset. Red and Yellow photons dominate in the sunlight reaching the ground at these times because the green to violet photons, having heavier masses than the red and yellow photons, are refracted more in the earth's atmosphere at sunrise and sunset, and reach the surface of the earth at a location where the time is later than the location at which a sunrise is being observed (farther eastward), or earlier than the location at which sunset is being observed (farther westward).

At noon we see only blue. Why?

When the sunlight enters the earth's atmosphere at 90 degrees, the heavier mass blue and violet photons penetrate the earth's atmosphere better than the other photons, which are partially absorbed by the molecules in the earth's atmosphere. The blue photons dominate in the sunlight reaching our eyes between sunrise and sunset, and from the overhead sun at noon. The blue photons are also principally reflected in the atmosphere and into space (not absorbed), as evidenced by pictures taken from spacecraft.

60.4 Glass transmits all the visible photons, but does not transmit the infra-red, low mass photons. From this fact, explain the principle of the hotbed.

The hotbed is a compost pile that is covered by glass. The heat generated by decaying material in the compost pile consists of infrared light rays, which do not pass through the glass. This keeps the compost pile warm by not allowing the infrared photons (the heat provided by these photons) to escape upward.

60.5 Which will be cooler on a hot day, a white hat or a black one?

A white hat, because white reflects all visible photons. A black hat would absorb all visible photons and become heated by them.

60.6 Will tea cool more quickly in a polished or in a tarnished metal vessel?

Good reflectors are poor radiators. Poor reflectors are good radiators. A tarnished metal vessel will radiate heat more than a polished metal vessel, so the tea in a tarnished tea pot will cool faster than it would if it were in a polished tea pot.

60.7 Which emits more “red” photons, a white-hot iron or the same iron when it is red-hot?

A hot platinum wire emits thirty-six times more photons at 1400°C than it does at 1000°C.

Iron becomes red-hot at about 280°C, and becomes blue-hot at about 320°C.

Raw Iron turns into a white-hot liquid and can be poured at about 1250°C.

A white hot iron will emit (radiate) more photons (including more red photons) than it will when it is red hot (280°C).

60.8 Liquid air flasks and thermos bottles are double-walled glass vessels with a vacuum between the walls. Liquid air (boiling point of -195°C) will keep many times longer if the glass walls are silvered than if they are not. Why?

The silvered surfaces help prevent photon radiations by reflecting them back toward their sources.

Why is the space between the walls evacuated?

Molecules in the environment having high molecular velocities strike the outer wall, increasing the molecular activity of the wall molecules (heating the wall). These molecules would strike the air molecules between the two walls and heat it. The air molecules between the walls would then strike the inner wall of the flask heating it, and these molecules in the inner wall would then heat the liquid air causing it to boil off quickly.

Removing the air between the outer and inner walls of the flask stops this process, preventing the liquid air from being heated in this manner. So, the liquid air remains liquid in the flask for a longer period of time.

61. ELECTRICAL RADIATIONS

61.1 Why is it necessary to use a rectifying circuit in series with a telephone receiver to detect sound caused by the electric waves?

The electrical signal arriving at the receiver of a telephone is a complicated sequence of sine waves. One sine wave is shown in the following picture. The wave consists of a positive half wave and a negative half wave. The positive half wave moves the diaphragm of the receiver in one direction, and the negative half wave moves the diaphragm of the receiver in the opposite direction.

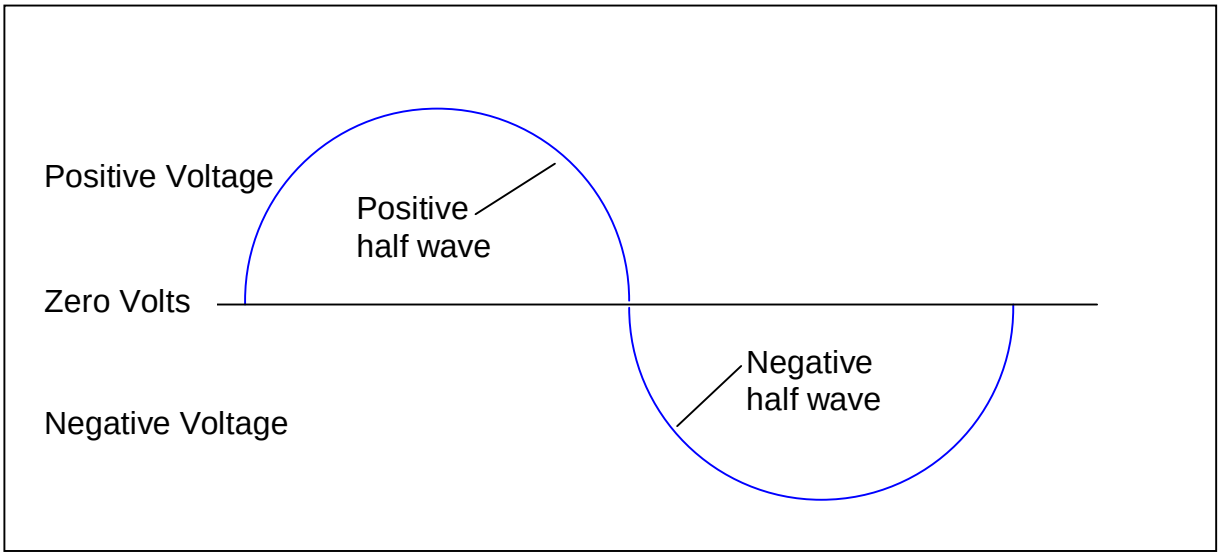

The effect of one full sine wave is to try to move the diaphragm of the receiver in one direction and very shortly thereafter in the opposite direction, which means that the diaphragm of the receiver does not move appreciably at all to produce sound in the air.

Removing one or the other of the half waves from the sine wave signal, however, allows the diaphragm in the receiver to be moved in one direction by the electrical signal and return itself back again to its starting position thereafter. This produces a sound wave in the air which we hear.

61.2 Explain why an electroscope is discharged when a bit of radium is brought near it.

Radium expels charged particles into the space surrounding it. When these particles strike a charged electroscope, they change the total charge on the electroscope, discharging the electroscope.

61.3 The wave length of the shortest x-rays is about 1×10^{-8}cm = 1×10^{-10}M. How many times greater is the wave length of green light (5.2×10^{-5} cm = 5.2×10^{-7}M).

$$\frac{5.2 \times 10^{-7}\, Green_{\lambda}}{1 \times 10^{-10}\, X - ray_{\lambda}} = 5.2 \times 10^{3} = 5{,}200.$$

The wave length of green light is about 5,200 times longer than the wavelength of the shortest x-rays.