CHEMICAL SYSTEMS

CHLORALKALI INDUSTRY
FERTILIZERS
BATTERIES

Introduction

- This section is about chlor-alkali industry and the benefits and disadvantages it presents to humankind.
- You will learn and be able to:
  - Understand the chemical reactions of the chlor-alkali process
  - Explain the pros and cons of the different electrochemical cells used
  - Know the differences between soap and detergent
  - Explain the chemical process of soap-making
  - Describe how a soap works
- What is your background about electrochemical and soap industries? What are your expectations from this training?

Agenda

- ELECTROCHEMICAL CELLS
  - The Membrane Cell
  - The Diaphragm Cell
  - The Mercury Cell
  - The benefits to humankind of the products of electrochemical processes
  - The risks associated with operating each of the cells
  - Use of process Flow Diagrams to answer aspects of the process

Soaps

- SOAP-MAKING PROCESS
  - How soaps and detergents work
  - Advantages of detergents over soaps
  - Human and environmental impact of detergents
  - Class activities

Electrochemical Cells

The term ***CHLORALKALI PROCESS*** refers to the industrial production of the alkali sodium hydroxide, NaOH, and chlorine, Cl_2 from common salt, sodium chloride, NaCl.

The chlor-alkali (also called "chlorine-caustic") industry is one of the largest electrochemical technologies in the world. Chlorine is produced by the ***electrolysis*** of sodium chloride (common table salt) solution, often called "brine".

Chlorine is produced electrolytically using three types of electrolytic cells, which are ***mercury***, ***diaphragm*** and ***membrane*** cells. . The main difference in these technologies lies in the manner by which the chlorine gas and the sodium hydroxide are prevented from mixing with each other to ensure generation of pure products.

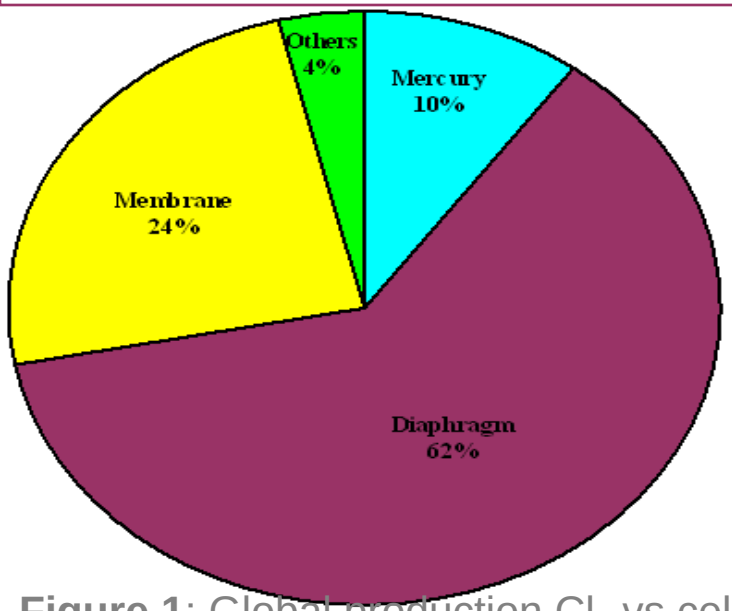

Figure 1: Global production Cl_2 vs cell type

In 2006, about 84% of the total world chlorine capacity of about 59 million ***metric tons*** was produced electrolytically using ***diaphragm*** and ***membrane*** cells, while about 13% was made using ***mercury*** cells (Figure 1).

1. The membrane cell

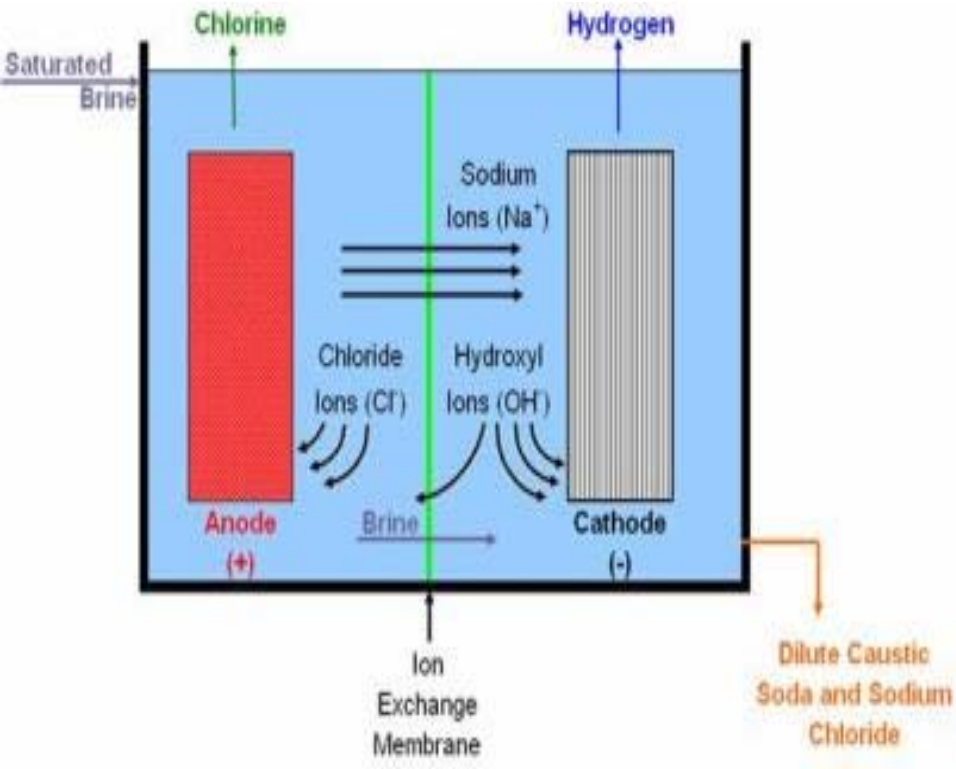

Figure 2: Schematic of membrane cell

The saturated brine is fed to the anode compartment where chlorine is liberated at the anode, and the sodium ion ***migrates*** to the cathode compartment.

$$\text{Anode: } 2\,Cl^-\,(aq) \rightarrow Cl_2\,(g) + 2\,e^-$$

In membrane cells, an ***ion-exchange membrane*** is used as a separator (separates the ***anode*** and ***cathode*** compartments) .

The separator is generally a bi-layer membrane made of perfluorocarboxylic and perfluoro- sulfonic acid-based films, sandwiched between the anode and the cathode.

Unlike in the diaphragm cells, only the sodium ions and some water migrate through the membrane. The unreacted sodium chloride and other inert ions remain in the ***anolyte***.

$$\text{Cathode: } 2\,H^+\,(aq) + 2\,e^- \rightarrow H_2\,(g)$$

$$2\,H_2O + 2\,e^- \longrightarrow 2\,OH^- + H_2(g)$$

$$Na^+ + OH^- \longrightarrow NaOH$$

2. The diaphragm cell

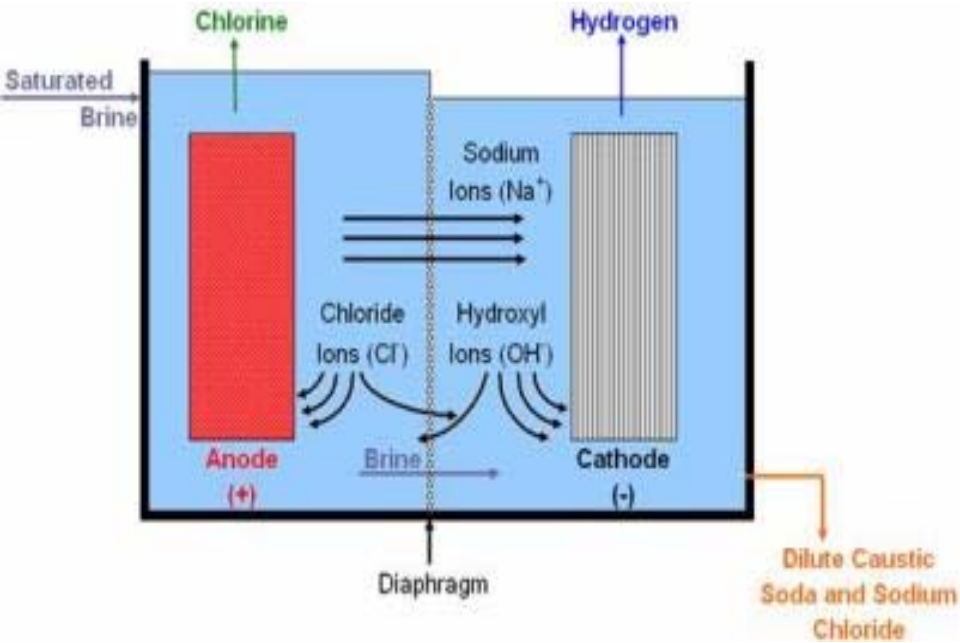

Figure 3: Schematic of diaphragm cell 1

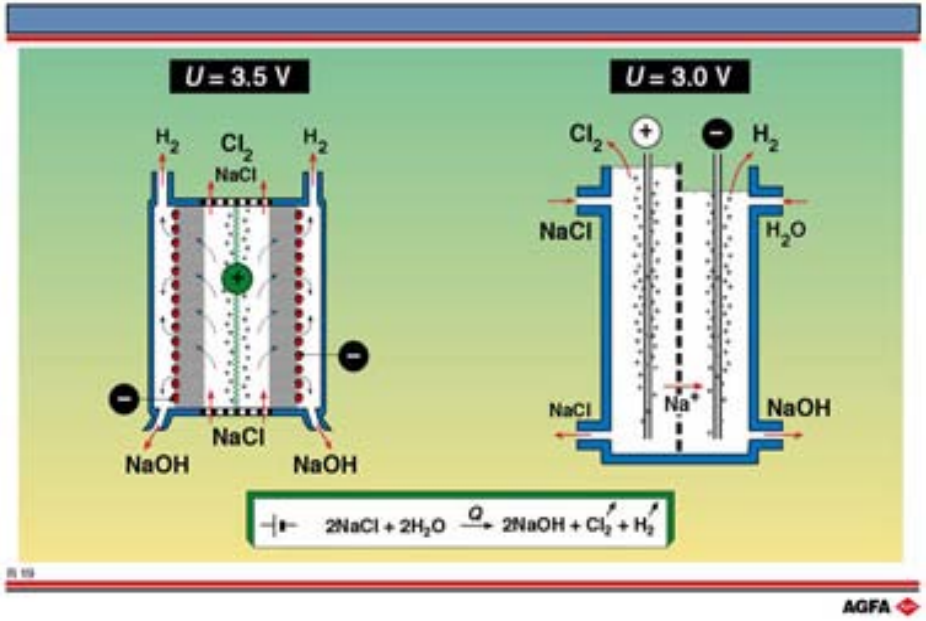

Figure 4: Schematic of diaphragm cell 2

The diaphragm cell is a rectangular box with metal ***anodes*** supported from the bottom with copper-base plates, which carries a positive current.

The ***cathodes*** are metal screens or punch plates connected from one end to the other end of the rectangular tank. Asbestos, dispersed as slurry in a bath, is vacuum deposited onto the cathodes, forming a diaphragm.

The *diaphragm* resists the back *migration* of the hydroxyl ions, which would otherwise react with the chlorine in the anode compartment.

3. The mercury cell

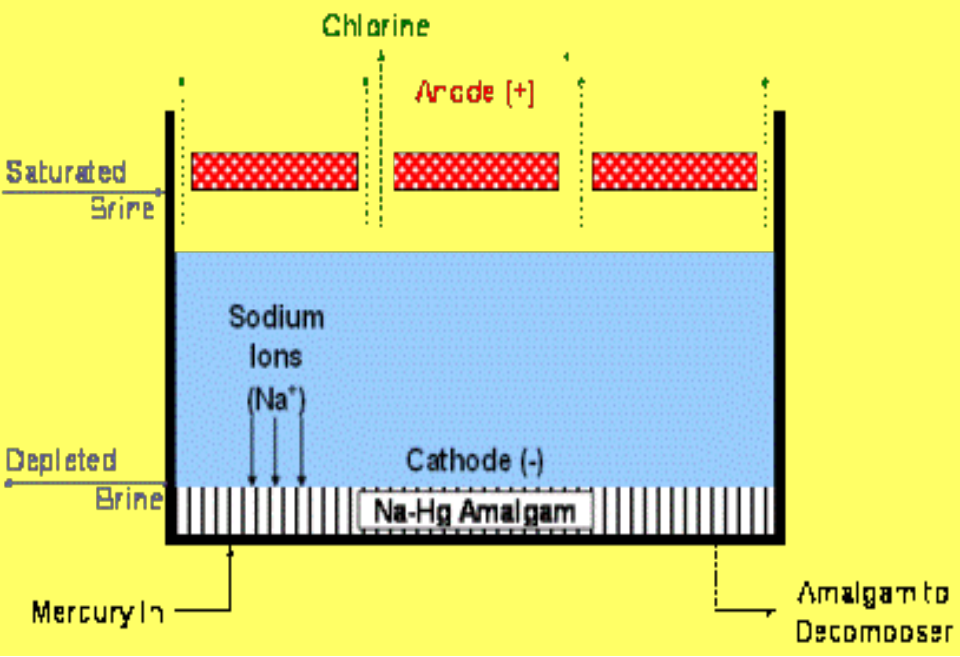

Figure 5: Schematic of mercury cell 1

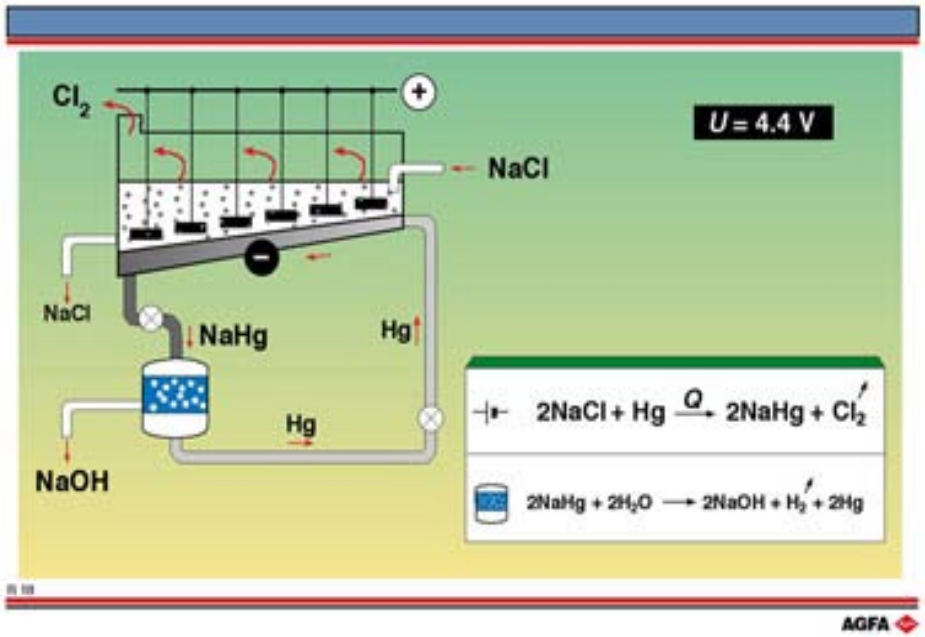

Figure 6: Schematic of mercury cell 2

The mercury cell has steel bottoms with rubber-coated steel sides, as well as end boxes for brine and mercury feed and exit streams with a flexible rubber or rubber-coated steel cover. Adjustable metal ***anodes*** hang from the top, and mercury (which forms the ***cathodes*** of the cell) flows on the inclined bottom. The ***current*** flows from the steel bottom to the flowing mercury.

Saturated brine fed from the end box is electrolysed at the anode (which traditionally consisted of a series of suspended graphite rods but are now being replaced by more expensive, but more durable ,Ti or Pt-steel alloys) to produce the chlorine gas, which flows from the top portion of the trough and then exits.

Anode: $2\ Cl^{-}\ (aq) \rightarrow Cl_2\ (g) + 2\ e^{-}$

The sodium ion generated reacts with the mercury to form sodium amalgam (an alloy of mercury and sodium), which flows out of the end box to a vertical cylindrical tank. About 0.25% to 0.5% sodium amalgam is produced in the cell. The sodium amalgam reacts with water in the decomposer, packed with graphite particles and produces caustic soda and hydrogen. The mercury being recovered is returned to the electrolysis cell.

$$2\ NaHg_{(l)} + 2\ H_2O \rightarrow H_{2(g)}\nearrow + 2\ NaOH_{(aq)} + 2\ Hg_{(l)}$$

Hydrogen, saturated with water vapour, exits from the top along with the mercury vapours. The caustic soda then flows out of the decomposer as 50% caustic. The unreacted brine flows out of the exit end box.

Exercise 1

Consider the Figures 1- 6.

1. About 84% of the total world chlorine capacity of about 59 million ***metric tons*** was produced electrolytically using ***diaphragm*** and ***membrane*** cells, while about 13% was made using ***mercury*** cells. What are the possible reasons for not using ***mercury*** cell?
2. Why is the ***diaphragm*** cell the most preferred process of manufacturing chlorine?
3. Briefly explain how brine (saturated NaCl) is separated at the ***anode*** in the ***diaphragm*** and ***membrane*** electrolytic cells.

Discussion

The following half-reaction equations give an interesting insight into the chlor-alkali process process:

$$Na^+_{(aq)} + 1\,e^- \rightleftharpoons Na_{(s)} \qquad E^\circ = -2.71\ V$$

$$2\,H_2O + 2\,e^- \rightleftharpoons H_{2(g)} + 2\,OH^-_{(aq)}(10^{-7}\ mol/L) \qquad E = -0.41\ V$$

$$2\,H^+_{(aq)}(10^{-7}\ mol/L) + 2\,e^- \rightleftharpoons H_{2(g)} \qquad E = -0.41\ V$$

$$Cl_{2(g)} + 2\,e^- \rightleftharpoons 2\,Cl^-_{(aq)} \qquad E^\circ = +1.36\ V$$

An electrolysis process, in which Cl^- ions reduce Na^+ ions, would, in theory, give rise not only to Cl_2, but also Na(s). The sodium metal would, however, immediately react with any water and/or H^+ ions present in the cell to produce hydrogen gas and OH^- ions (i.e. NaOH solution).

Such a process would be very useful, since three important chemicals would be produced during a single process. However, there is a problem since the chlorine, produced in the presence of a basic solution of sodium hydroxide, would combine with it to form ClO^- ions and Cl^- ions. This results in the production of sodium chlorate(I), NaClO, a component of household bleach. To overcome this problem the chlorine and sodium hydroxide must be removed from the cell before they can react.

4. The benefits to humankind of the products of electro-chemical processes

Uses for NaOH, Na_2CO_3 and Cl_2		
NaOH	**Na_2CO_3**	**Cl_2**
Manufacture of: Soap Ceramics Numerous organic chemicals Various sodium salts	**Manufacture of:** Paper Glass Various sodium salts	**Manufacture of:** Plastics Paper industry Insecticides Hydrochloric acid Numerous organic chemicals **Used for:** Bleaching Water purification

5. The risks associated with operating each of the cells

Process	Disadvantages
Diaphragm process	•Use of asbestos;
Mercury process	•Use of mercury; •use of solid salt;
Membrane process	•Use of solid salt;

6. Use of process Flow Diagrams to answer aspects of the process

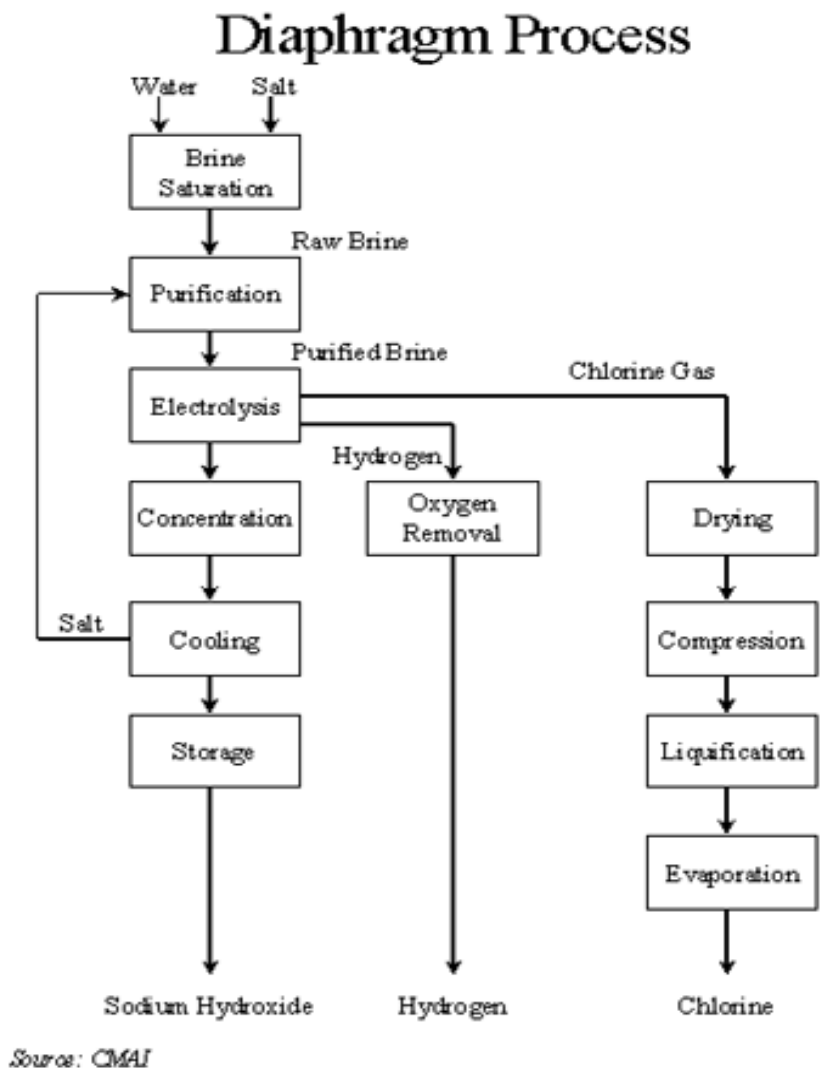

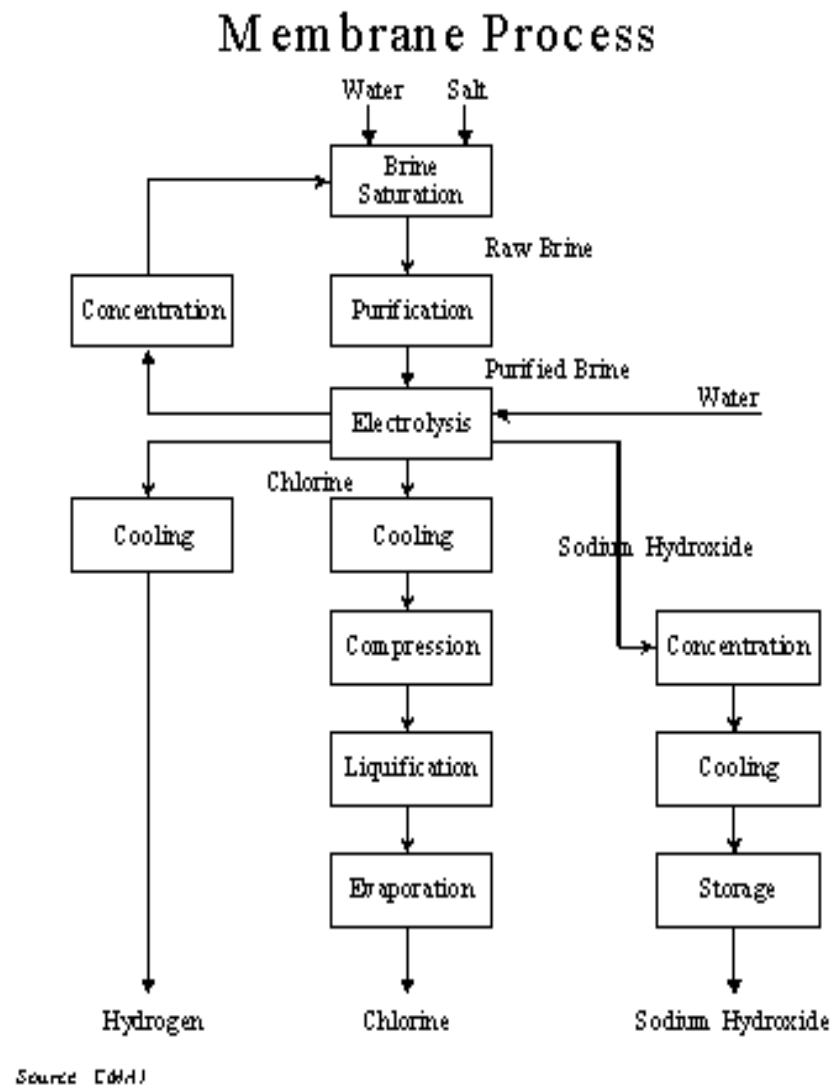

Figure 6: Schematic of diaphragm process

Figure 7: Schematic of membrane process

Exercise 2

1. Discuss the and differences between the two chlor-alkali processes.
2. The membrane process requires high purity brine. Why does the purity of brine so important in this process?

Soap-making process

Soaps are produced by the action of strong alkalis, such as potassium or sodium hydroxides on fats and oils. The reaction, called SAPONIFICATION, is the hydrolysis of esters of the trihydric alcohol, glycerol, and long-chain fatty acids. These esters collectively form a group of organic compounds called **TRIGLYCERIDES.**

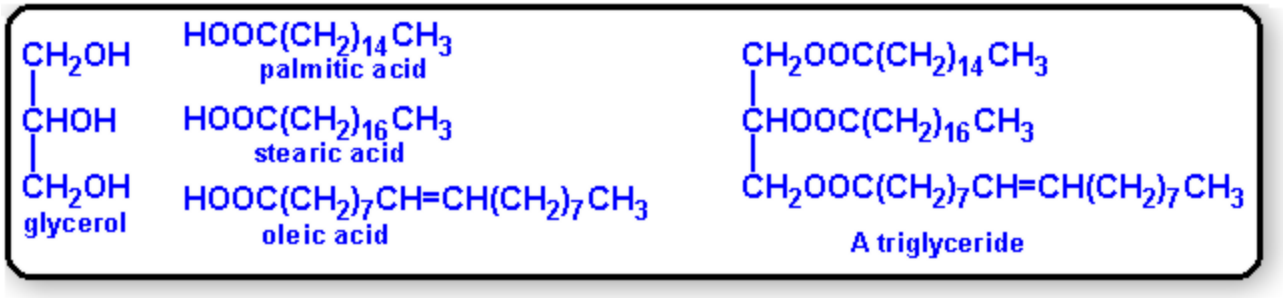

When a triglyceride is treated with sodium or potassium hydroxides, hydrolysis takes place forming glycerol and the sodium or potassium salts of the acids, that is, soap. The glycerol is refined, and sold as GLYCERINE, which is used, amongst other things, for the manufacture of nitroglycerine, the explosive in dynamite.

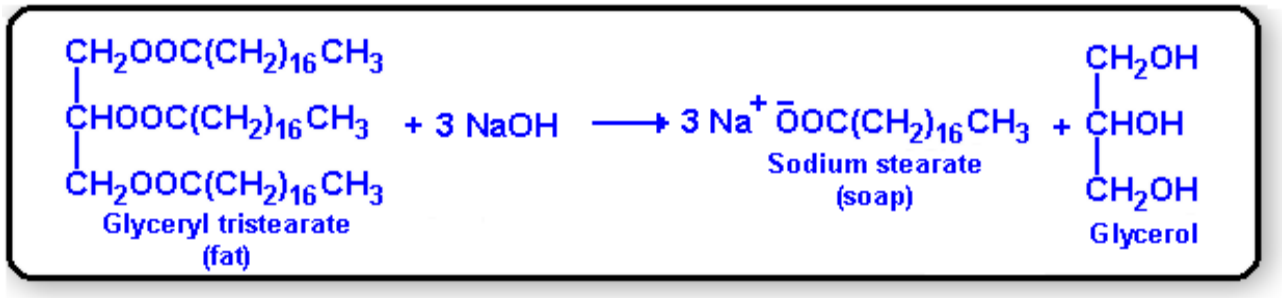

1. How soaps and detergents work

Soaps are useful for cleaning because soap *molecules* attach readily to both *nonpolar molecules* (such as *grease* or *oil*) and *polar molecules* (such as *water*). Although grease will normally adhere to skin or clothing, the soap molecules can attach to it as a "handle" and make it easier to rinse away.

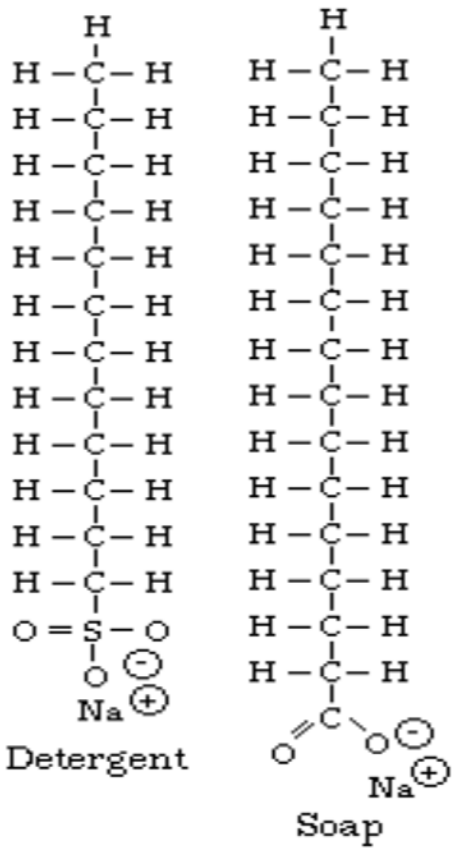

Applied to a soiled surface, soapy water effectively holds particles in suspension so the whole of it can be rinsed off with clean water.

(fatty end) :CH_3-$(CH_2)_n$-CO_2^- $^+$Na: (water soluble end)

The hydrocarbon ("fatty") portion dissolves dirt and oils, while the ionic end makes it soluble in water. Therefore, it allows water to remove normally-insoluble matter by *emulsification*.

Exercise 3

Suppose you take a bath after a very long day at work. Initially you pour clean and transparent water in the bath. After 30 minutes of bathing the water is cloudy and filthy. When coming out of the water you notice some water droplets on your skin.

1. No one can ever claim to be completely clean even after a thorough bathing. Explain.
2. Briefly explain how clean water ended up dirty.
3. Why are water droplets adhering onto the skin?

2. Advantages of detergents over soaps

- **They can be used even with hard water for washing clothes.**
- **They help us to save vegetable oils for human consumption.**
- **They have stronger cleansing action than soaps.**
- **They are more soluble in water than soaps.**

Hard water contains certain minerals, and many soaps cannot be used to launder in it. Such soaps react with the minerals to form a substance called lime soap or soap curd. Lime soap does not dissolve, and so it is difficult to remove from fabrics and other surfaces. It also causes "bathtub ring." Detergents do not leave such deposits, and they also penetrate soiled areas better than soap does. In addition, detergents dissolve more readily in cold water.

Industries use detergents and soaps as cleaners, lubricants, softeners, and polishers. Some motor oils contain detergents that break down soot, dust, and other particles that can harm engine parts.

3. Human and environmental impact of detergents

- **Have harsh properties and are significant health and environmental hazards**
- **Skin-irritating qualities to humans**
- **Toxicity to organisms in the environment**
- **Contain phosphates, which cause nutrients overloading of streams and lakes**
- **May contain chlorine, which may be allergic, and is environmentally unfriendly**

Summary

- You have learnt to:
  - Understand the chemical reactions of the chlor-alkali process
  - Explain the pros and cons of the different electrochemical cells used
  - Know the differences between soap and detergent
  - Explain the chemical process of soap-making
  - Describe how a soap works

FERTILISER INDUSTRY

Introduction

- This section is about fertilisers and their impact on plants and animals
- You will learn and be able to:
  - Recognise the importance of adequate crop production
  - Describe requirements of plants and animals for healthy growth
  - Know industrial processes associated with fertilisers
  - Identify and describe the types of fertilisers
  - Explain effects of fertilisers on the environment
- Can you give your background regarding fertilisers or fertiliser industry? What are your expectations from this training?

Agenda

- NUTRIENTS FOR PLANTS AND ANIMALS
  - Essential nutrients for plants and their sources
  - Primary nutrients for plants and their sources
  - Function of N, P and K in plants
  - Major elements for humans/animals and their sources
  - Comparison of functions of nutrients in humans/animals to those in plants

Agenda continues

- FORMS OF NUTRIENTS
  - Historical sources of N (guano), P (bone meal) and K (German mines) – i.e. before and after World War I
  - Sources of potash
  - Interpretation of the N:P:K fertilizer ratio

Agenda continues

- INDUSTRIAL MANUFACTURING PROCESSES
  - N_2 – fractional distillation
  - H_2 – at SASOL from coal and steam
  - NH_3 – Haber processs
  - HNO_3 – Ostwald process
  - H_2SO_4 – Contact process

- EUTROPHICATION
  - Causes of eutrophication
  - Effects of eutrophication
  - Circumstances leading to eutrophication
  - Prevention of eutrophication
  - Ways of solving problems arising from eutrophication

- USE OF INORGANIC FERTILISERS ON HUMANS AND THE ENVIRONMENT

Nutrients for plants and animals

- Essential nutrients and their sources:

  C – CO_2 (from the atmosphere)

  - carbohydrates generated through photosynthesis (secondary sources)

  O – water (from rain), which can also be explained in terms of water cycle

  - CO_2 (from the atmosphere)

  H – water (from rain)

- Primary nutrients and their sources:

  N– obtained from the soil (as NO_3^- and NH_4^+)

  P – obtained from soil (as inorganic PO_4^{2-})

  K – obtained from soil solution

Both N and P require fixation, i.e. they need to be converted from organic to inorganic form that can be taken by plants.

Nutrients for plants and animals

- **Functions of N, P and K in plants**

Symbol	Function
N	**1)** Component of chlorophyll; amino acids, proteins enzymes; nucleic acids (RNA and DNA); some auxins and cytokinins.
P	**1)** Component of the high energy compounds ATP, NADPH and NADP; nucleic acids (DNA and RNA); and phospholipids.
K	**1)** Needed for protein and enzyme synthesis and activation. **2)** Involved in maintaining proper water balance. **3)** Needed for photosynthesis.

- **Major elements for humans/animals and their sources**

C – carbohydrates, e.g. simple sugars/monosaccarides (glucose or blood sugar used as a source of enegry) or disaccarides, e.g. sucrose or table sugar; lactose or milk sugar; maltose or malt sugar; complex carbohydrates (starch found in plants used as energy source for humans); fats

H – pure hydrogen (from atmoshere) is toxic to humans; water; carbohydrates

O – pure oxygen (from atmosphere) essential for respiration; water

N – pure nitrogen (from atmosphere) not useful for humans; proteins made from a chain of amino acids are basic building materials of cells

- **Comparison of functions of nutrients in humans/animals to those in plants**

Symbol	Function (Plants)
N	**1)** Component of chlorophyll; amino acids, proteins and enzymes; nucleic acids (RNA and DNA); some auxins and cytokinins.
P	**1)** Component of the high energy compounds ATP, NADPH and NADP; nucleic acids (DNA and RNA); and phospholipids.
K	**1)** Needed for protein and enzyme synthesis and activation. **2)** Involved in maintaining proper water balance. **3)** Needed for photosynthesis.
Mg	**1)** Component of chlorophyll. **2)** Activates many enzymes.

Symbol	Function
Ca	**1)** Ca pectates in middle lamella of cell wall cement cells together; 2) Required for normal cell division and meristem growth; 3) Stabilises membranes
P	**1)** Component of the high energy compounds ATP, NADPH and NADP; nucleic acids (DNA and RNA); and phospholipids.
S	**1)** Component of several amino acids (methionine, cystine, cysteine).
Fe	**1)** Required for chlorophyll synthesis. **2)** Component of many enzymes and carriers, especially those of electron transport chain.
Zn	**1)** Required for tryptophan, hence auxin (IAA), synthesis.
Mn	**1)** Required for chlorophyll synthesis. **2)** Activates many enzymes.
Cu	**1)** Required for chlorophyll synthesis. **2)** Component of many enzymes and carriers, especially those of electron transport chain.

Symbol	Function (Humans)
Ca	1) For muscle and digestive system health; 2) Builds bone; 3) Neutralizes acidity 4) Clears toxins 5) Helps blood stream
Mg	1) Required for processing ATP and related reactions (health, builds bone, causes strong peristalsis, increases flexibility, increases alkalinity)
P	1) Required component of bones and energy processing and many other functions (bone mineralization).
S	1) For three essential amino acids and many proteins and cofactors (skin, hair, nails, liver, and pancreas health)
K	1) Required electrolyte (heart and nerves health)
Zn	1) Required for tryptophan, hence auxin (IAA), synthesis.
Fe	1) Required for many proteins and enzymes, notably hymoglobinn 2) Activates many enzymes.

Exercise 1

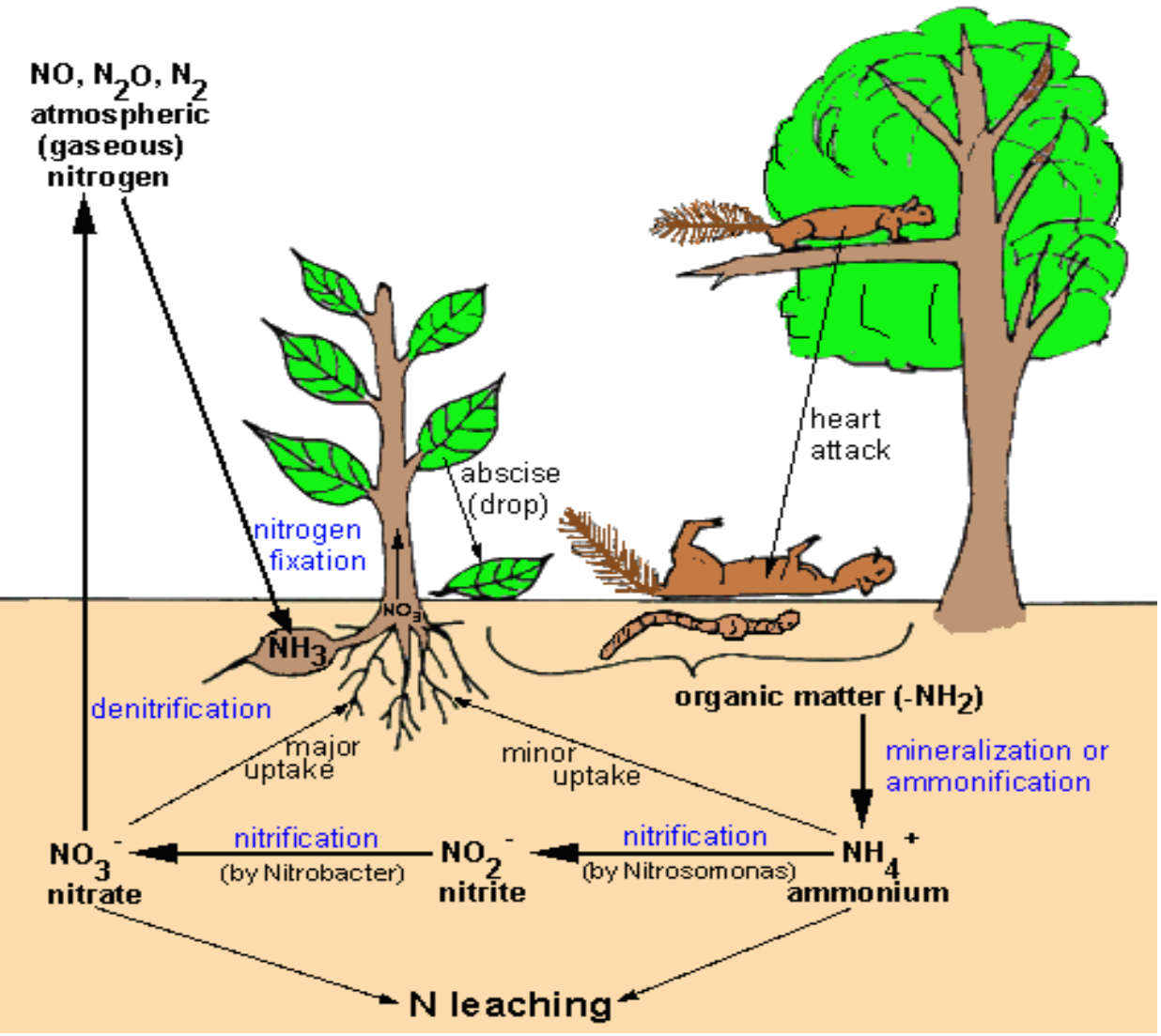

Figure 1: Loss of nitrogen from the soil

Consider the figure on the left.

a) give the form of N in the organic matter.

b) what could be the possible cause of the heart attack?

c) give two reasons why NH_4^+ is a minor uptake?

d) State whether the process NH_4^+ to NO_2^- to NO_3^- is oxidation or reduction.

Exercise 1 continues

e) Write the Lewis structure of NO_2^-, NH_4^+ , NO_3^-.

f) Write the balanced equation for the formation of gaseous NH_3 in the atmosphere.

f) Write the balanced equations for the following reactions:

a) Oxidation of NH_3 $\longrightarrow$ NO_2^-

b) Oxidation of NH_4^+ NO_2^-

FORMS OF NUTRIENTS

- **Historical sources of N (guano), P (bone meal) and K (German mines) – i.e. before and after World War I**

Sources of N (guano):

– guano (seabird droppings) along the coasts of Chile and Peru and on Pacific islands

seabird feeds on **fish** (from nutrient-rich coastal waters)

– Guano (bat droppings) refined through four stages

plant eaten and processed by **insects** eaten and processed by **bats** droppings deposited on the cave floor where **cave beetles** provide final refinement

Drastically, by 1900, most of the great guano deposits were depleted and the world was well on its way to dependence on chemical fertilizers.

Sources of P (bone meal):

– **Animal** and **human bones** were always effective in improving or sustaining crop yields

– **superphosphate industry** came into being as a result of attempts to increase the effectiveness of bones and also to find a more plentiful and secure source of phosphate.

– Bones were collected from old battlefields and burial sites such as the catacombs of Sicily.

– Treatment of bones with a strong acid, such as sulphuric acid, increases the availability of phosphorus (Justus von Liebig, 1803 – 1873)

– Chinese farmers applied calcined or lime-treated bones to their fields.

Sources of K (German mines):

– The potassium-rich deposits in Germany

– Processes developed to separate KCl from unwanted carnallite in the ore

– Extensive reserves of high-grade potassium ores were discovered in the Federal Soviet Union (FSU).

– France began production of potash in about 1910 while the United Kingdom started production of potassium fertilisers from its difficult ore body in 1974.

Sources of potash:

– Saltpetre (potassium nitrate) collected beneath cattle pens

–(Johann Glauder, 1604 – 1670) .

– came from animal wastes, must have originated from

–the plants consumed by animals.

– Prior to the separation of the FSU's potash fertiliser industry into

– the Russian and Byleorussian sectors at the end of 1980, it had the

–world's largest potash production capabilities.

Recovery of potassium salts from the Dead Sea in the Near East region was undertaken in 1931 and then discontinued in 1947.

Sources of potash:

Common name	Chemical name	Formula
Potash fertilizer	potassium oxide	K_2O
Caustic potash or potash lye	potassium hydroxide	KOH
Carbonate of potash, salts of tartar, or pearlash	potassium carbonate	K_2CO_3
Chlorate of potash	potassium chlorate	$KClO_3$
Muriate of potash	potassium chloride	KCl
Nitrate of potash or saltpeter	potassium nitrate	KNO_3
Sulfate of potash	potassium sulfate	K_2SO_4
Permanganate of potash	potassium permanganate	$KMnO_4$

Interpretation of the N:P:K fertiliser ratio

- **FERTILIZER ANALYSIS**
  analysis - sequence of 3 numbers on the fertilizer label that gives the percent
  composition of N-$P_2 0_5$-$K_2 0$ in a fertilizer; required by law to be on the
  label of every fertilizer sold.

- **Example: 8-8-8 means the fertilizer contains:**
  8% N
  8% $P_2 0_5$
  8% $K_2 0$
  24% total nutrient content

  100 lb. of 8-8-8 @ R40.99
  100 lb. @ 24% = 24 lb. of nutrients
  @ R40.99 = 20.8 cents per lb

- **Buy fertilizers by price per pound of fertilizer, not price per bag.**

FERTILIZER RATIO

ratio - the relative proportion of N to P_20_5 to K_20 in a fertilizer.

Analysis	Ratio
8-8-8	1:1:1
20-20-20	1:1:1
10-20-10	1:2:1
18-6-12	3:1:2

USING FERTILIZER RATIOS TO MANIPULATE GROWTH

a) to favour vegetative growth

- use a high N, low P and K fertilizer
- for example, use a 2-1-1 or 3-1-1 ratio fertilizer (higher 1st number)

b) to favour flowering, root and underground storage organ growth

- use a low N, high P and/or K fertilizer

for example, use a 1-2-2 or 1-3-2 ratio fertilizer (higher 2nd and/or 3rd number)

Project 1

Let learners visit a local nursery and gather information about the following:

1. The brand name and the N:P:K fertiliser ratio for fertilisers that favour vegetative growth.
2. The brand name and the N:P:K fertiliser ratio for fertilisers that favour flowering, root and underground storage organ growth.

INDUSTRIAL MANUFACTURING PROCESSES

- The fertiliser industry is primarily concerned with the production of fertilisers aimed at supplying nitrogen, phosphorus and potassium in a suitable form for application to agricultural lands.

N_2 – Fractional Distillation of Air:

Air is filtered to remove dust, and then cooled in stages until it reaches –200°C. At this temperature it is a liquid. We say that the air has been liquefied.

Here's what happens as the air liquefies:

water vapour condenses, and is removed using absorbent filters

- carbon dioxide freezes at –79°C, and is removed
- oxygen liquefies at –183°C
- nitrogen liquefies at –196°C

The liquid nitrogen and oxygen are then separated by fractional distillation.

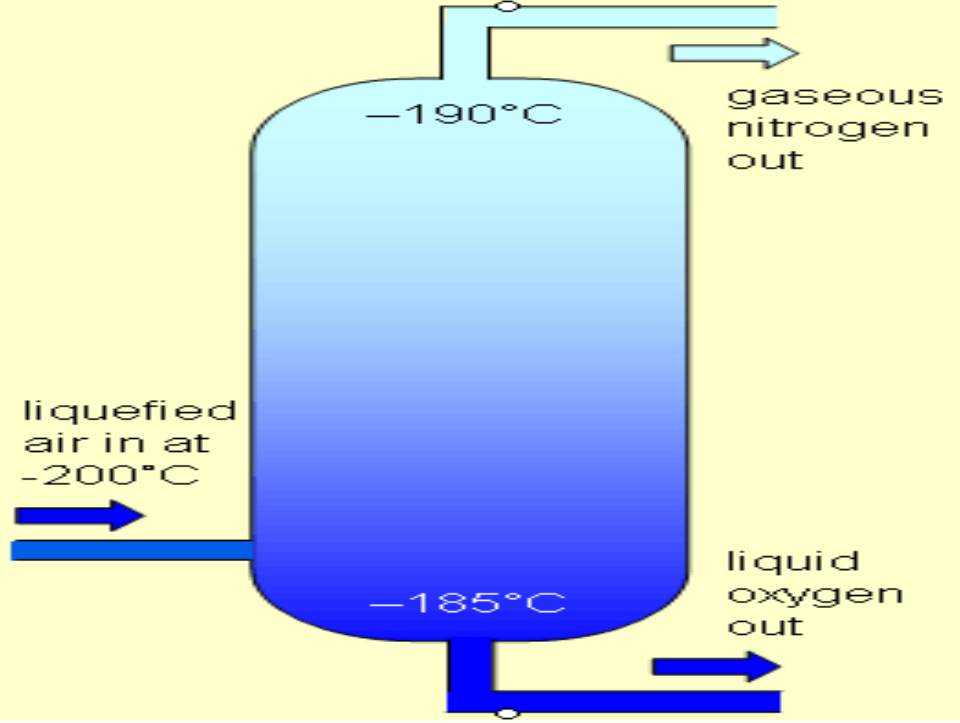

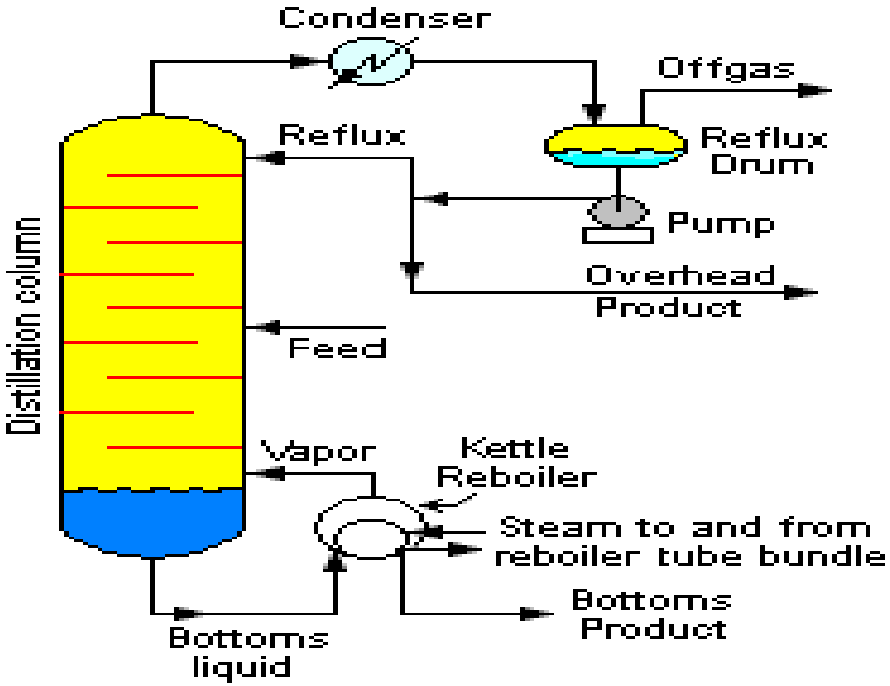

Figure 2: Fractional distillation of air

Figure 3: Fractional distillation process

Uses of nitrogen and oxygen:s of nitrogen and oxygen:

- liquid nitrogen is used to freeze food
- food is packaged in gaseous nitrogen to increase its shelf life
- oil tankers are flushed with gaseous nitrogen to reduce the chance of explosion

oxygen is used in the manufacture of steel and in medicine

Exercise 2

1. What will happen if the temperature of the column is maintained at -196 °C (Figure 2)?

2. How should the fractionating column be designed to ensure effective separation of oxygen and nitrogen? Explain.

3. What is the purpose of a fractionating column? [Normal distillation process could have been used.]

4. Nitrogen is collected as an offgas and overhead product (Figure 3). What is the state of the overhead product at room temperature?

5. The overhead product and gaseous oxygen can be transferred back into the fractional distillation column for refluxing. Explain.

H_2 – Production at SASOL from Coal and Steam:

The initial reactants for the Fischer-Tropsch process (i.e. CO and H_2) can be produced by other reactions such as the partial combustion of a hydrocarbon or by the gasification of coal or biomass.

Coal is treated with steam and oxygen, forming carbon dioxide, carbon monoxide, methane and hydrogen according to the following unbalanced reaction:

$$C + O_2 + H_2O \longrightarrow CO_2 + CO + CH_4 + H_2$$

Gasification of coal or biomass involves the following reactions:

$$C + H_2O \longrightarrow H_2 + CO \ (H > 0)$$

The energy needed for this endothermic reaction of coal or biomass and steam is usually provided by (exothermic) combustion with air or oxygen. This leads to the following reaction:

$$2\,C + \underset{\text{air}}{O_2 + N_2} \longrightarrow 2\,CO + N_2 \quad (H < 0)$$

The process conditions can be adjusted to select either production of hydrocarbons (fuels + chemicals) or synthesis of ammonia by Haber process.

Exercise 3

1. How can the CO be removed to force the reaction to favour the synthesis of ammonia?

2. How can the CH_4 be removed to force the reaction to favour the synthesis of ammonia?

3. How can the CO_2 be removed to force the reaction to favour the synthesis of ammonia?

4. Suppose SASOL wants to switch to production of fuels and chemicals. What reactants should be used?

5. What can happen if the heat released by the reaction increases? Explain.

6. How does pressure influence the rate of a reaction and the design of the reactors? Explain.

NH_3 – Production by Haber Process:

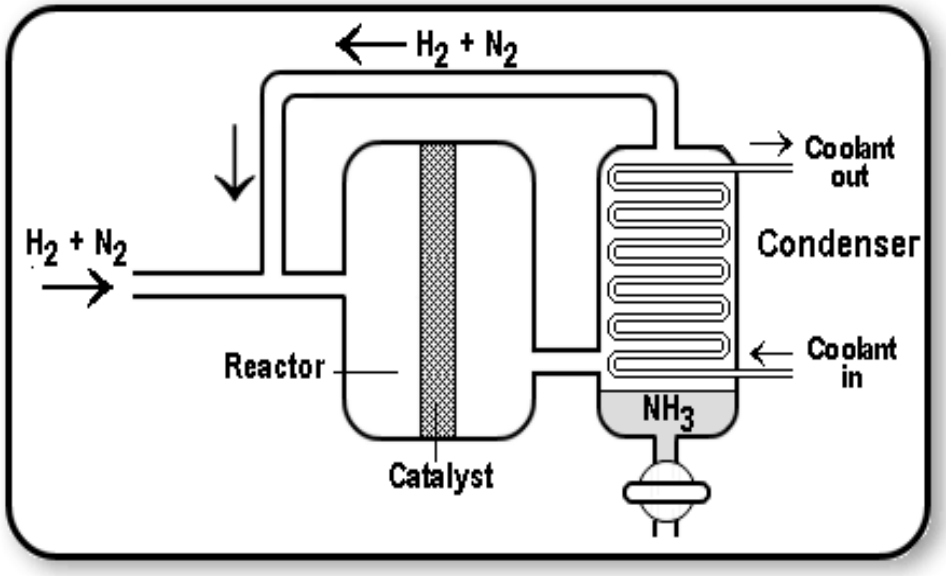

Figure 4: Ammonia production

Reaction conditions:

Temperature = 450 - 500 °C

Pressure = 350 – 400 kPa

Catalyst = iron

$N_2 + 3H_2 \longrightarrow 2NH_3$ (ΔH = - 92 kJ)

9. How doe the change in pressure affect the reaction?

Exercise 4: Refer to Figure 4

1. Describe the Haber process
2. What is the purpose of the catalyst?
3. What type of reaction occurs in the conversion of nitrogen to ammonia?
4. What is the oxidation state/number of nitrogen in N_2 and NH_3
5. According to the reaction equation, the forward reaction is exothermic. Why does the reaction require such high temperatures?
6. According to the equation the reaction never reaches equilibrium. Explain.
7. Describe the overall reaction graphically.
8. How does change in reaction temperature affect the reaction?

HNO_3 – Production by Ostwald Process:

Ammonia is converted to nitric acid in two stages.

Step 1: Catalytic oxidation of ammonia

Temperature = 900 °C

Pressure = 400 – 1010 kPa

$$4\ NH_3 + 5\ O_2 \xrightarrow{Pt/10\%Rh} 4\ NO + 6\ H_2O\ (\Delta H = -950\ kJ)$$

Stage two (combining two reaction steps) is carried out in the presence of water in an ***absorption*** apparatus. Initially nitric oxide is oxidized again to yield **nitrogen dioxide**.

Step 2: Oxidation of nitric oxide

$$2\ NO + O_2 \longrightarrow 2\ NO_2$$

Step 3: Reaction with water and oxygen to form nitric acid

$$4\ NO_2 + 2\ H_2O + O_2 \longrightarrow 4\ HNO_3$$

Usually **NO_2** in step 2 is readily absorbed by the water

$$3\ NO_2 + H_2O \longrightarrow 2\ HNO_3 + NO$$

The NO is recycled, and the acid is concentrated to the required strength by ***distillation***.

H_2SO_4 – Production by Ostwald Process:

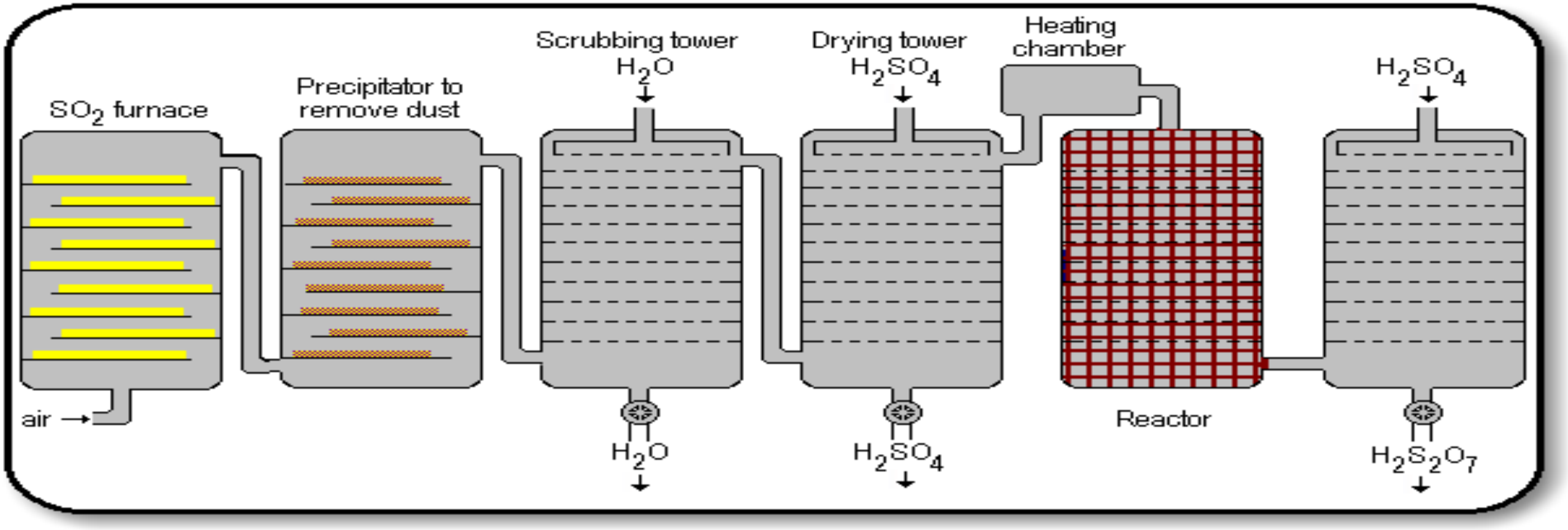

Figure 5: Sulphuric acid production

Step 1: Melted sulphur is burned in a furnace, using air, producing sulphur dioxide, SO_2.

Step 2: The SO_2 gas is passed through a tower called a precipitator in order to remove dust and other impurities that might interfere with the catalyst.

Step 3: The SO_2 is then washed with water, in a scrubbing tower.

Step 4: The SO_2 is then dried in a drying tower.

Step 5: After passing through a heating chamber, the SO_2, which is still mixed with air, is passed through a reactor. There, using vanadium pentoxide, V_2O_5, as catalyst, the SO_2 is converted to sulphur trioxide, SO_3.

$$2\ SO_2 + O_2 \longrightarrow 2\ SO_3$$

Step 6: Finally, the SO_3 is absorbed in concentrated sulphuric acid, giving the so-called oleum or pyrosulphuric acid. This is the diluted with water to give about 98% pure H_2SO_4.

$$SO_3 + \text{conc. } H_2SO_4 \longrightarrow H_2S_2O_7$$

$$H_2S_2O_7 + H_2O \longrightarrow 2\ H_2SO_4$$

Exercise 5

1. What is the purpose of water in Step 3?
2. What is the purpose of sulphuric acid in Step 4?
3. Why is it necessary to dry sulpher dioxide before passing it through the reactor?

Project 2

Suppose you have recently being employed by SASOL after completing your Grade 12. Your supervisor wants you to prepare her a 2 M H_2SO_4 solution. You are given a 98% pure sulphuric acid solution. Use the following information, which is given on the bottle to calculate the required concentration:

density of sulphuric acid =
Molar mass of sulphuric acid =

EUTROPHICATION

Eutrophication is an increase in chemical nutrients-- typically compounds containing nitrogen or phosphorusn -- in an ecosystem.

- **Causes of eutrophication**
  - Natural causes
  - Anthropogenic factors
  - Other causes

- **Natural causes**

  The latitude of the body of water has a significant effect on the extent of eutrophication occurring. Solar energy and temperature are usually greater at lower latitudes.

- **Anthropogenic factors**
  - **Point source**
  - **Nonpoint source**

  - **Point sources**
    - Wastewater effluent (municipal and industrial)
    - Runoff and leachate from waste disposal systems
    - Runoff and infiltration from animal feedlots
    - Runoff from mines, oil fields, unsewered industrial sites
    - Overflows of combined storm and sanitary sewers
  - Runoff from construction sites >20,000 m^2

- **Nonpoint sources**
  - Runoff from agriculture/irrigation
  - Runoff from pasture and range
  - Urban runoff from unsewered areas
  - Septic tank leachate
  - Runoff from construction sites <20,000 m^2
  - Runoff from abandoned mines
  - Atmospheric deposition over a water surface
- Other land activities generating contaminants

- **Other causes**
  - Water body factors
  - Other organisms

- **Effects of eutrophication**

  Many ecological effects can arise from stimulating ***primary production***, but there are three particularly troubling ecological impacts: ***decreased biodiversity***, ***changes in species composition*** and ***dominance***, and ***toxicity effects***.

- Increased biomass of *phytoplankton*
- Toxic or inedible phytoplankton species
- Increases in blooms of gelatinous zooplankton
- Decreased biomass of benthic and epiphytic *algae*
- Changes in macrophyte species composition and biomass
- Decreases in water transparency (increased *turbidity*)
- Color, smell, and water treatment problems
- Dissolved oxygen depletion
- Increased incidences of fish kills
- Loss of desirable fish species
- Reductions in harvestable fish and shellfish

Decreases in perceived aesthetic value of the water body

Aerial view of Lake 227 circa 1975, showing the many marker floats used
for intensively studying this small, experimentally fertilized lake.

The bright green colour results
from bluegreen algae (Cyanobacteria), which are growing on phosphorus added to the near side of the curtain

Prevention of eutrophication

- **Effectiveness**

  Cleanup measures have been mostly, but not completely, successful.

- **Minimizing nonpoint pollution: future work**
  - Riparian buffer zones - are interfaces between a flowing body of water and land, and have been created near waterways in an attempt to filter pollutants; sediments and nutrients are deposited here instead of in water.
  - Prevention policy
  - Nitrogen testing and modeling
  - Organic farming

USE OF INORGANIC FERTILISERS ON HUMANS AND THE ENVIRONMENT

- **Nitrogen in the air**
  - No_x is a contributor to smog and groundlevel ozone
  - Produce low-lying ozone, which in turn can cause or worsen asthma, cough, reactive airways disease, respiratory tract inflammation, and chronic respiratory disease.

- **Nitrogen in the air**
  - High levels of NO_x can also worsen viral infections such as the common cold.
  - In the stratosphere, ultraviolet light breaks N_2O apart, producing NO, which in turn acts as a catalyst to break down ozone.
  - Destroying ozone in the stratosphere, of course, allows more ultraviolet light to reach the Earth's surface, resulting in more skin cancers.
- **Nitrogen in the air**
  - Because of its high solubility, nitrate quickly escapes to down below the root zone of an agricultural field or forest and into groundwater.
  - Nitrate loading to bays and costal zones provide such a steady source of nutrients that algae bloom uncontrollably.
  - When the algae die, they sink and decompose, which draws oxygen from the water.
- **Nitrogen in the air**
  - As with water and air, reactive nitrogen builds up in soil.
  - When it leaches out of the system, it takes other nutrients with it, so it ends up acidifying the soil
  - it takes things like magnesium and calcium out into the water. And you end up with a very unbalanced system.

Summary

- You have learnt to:
  - Recognise the importance of adequate crop production
  - Describe requirements of plants and animals for healthy growth
  - Know industrial processes associated with fertilisers
  - Identify and describe the types of fertilisers
  - Explain effects of fertilisers on the environment

- Feedback from participants is highly appreciated to enable the presenter to improve course material and the presentation.

BATTERIES

Introduction

- This section is about batteries, the benefits and disadvantages they presents to humankind.
- You will learn and be able to:
  - Know when to use which batteries
  - Know the different parts that make up a battery
  - Understand why and how lead-acid batteries are recycled
  - Write the cell reactions in the main types of batteries

- What is your background about batteries and battery industries? What are your expectations from this training?

Agenda

- GALVANIC CELLS
  - The equation for the cell
  - The cell voltage
  - The energy stored in cells
  - Cell capacity

Agenda continues

- PRIMARY AND SECONDARY CELLS
  - Lithium-ion battery
  - Lead acid accumulator
  - Zinc-carbon dry cell (Leclanché)

Galvanic Cells

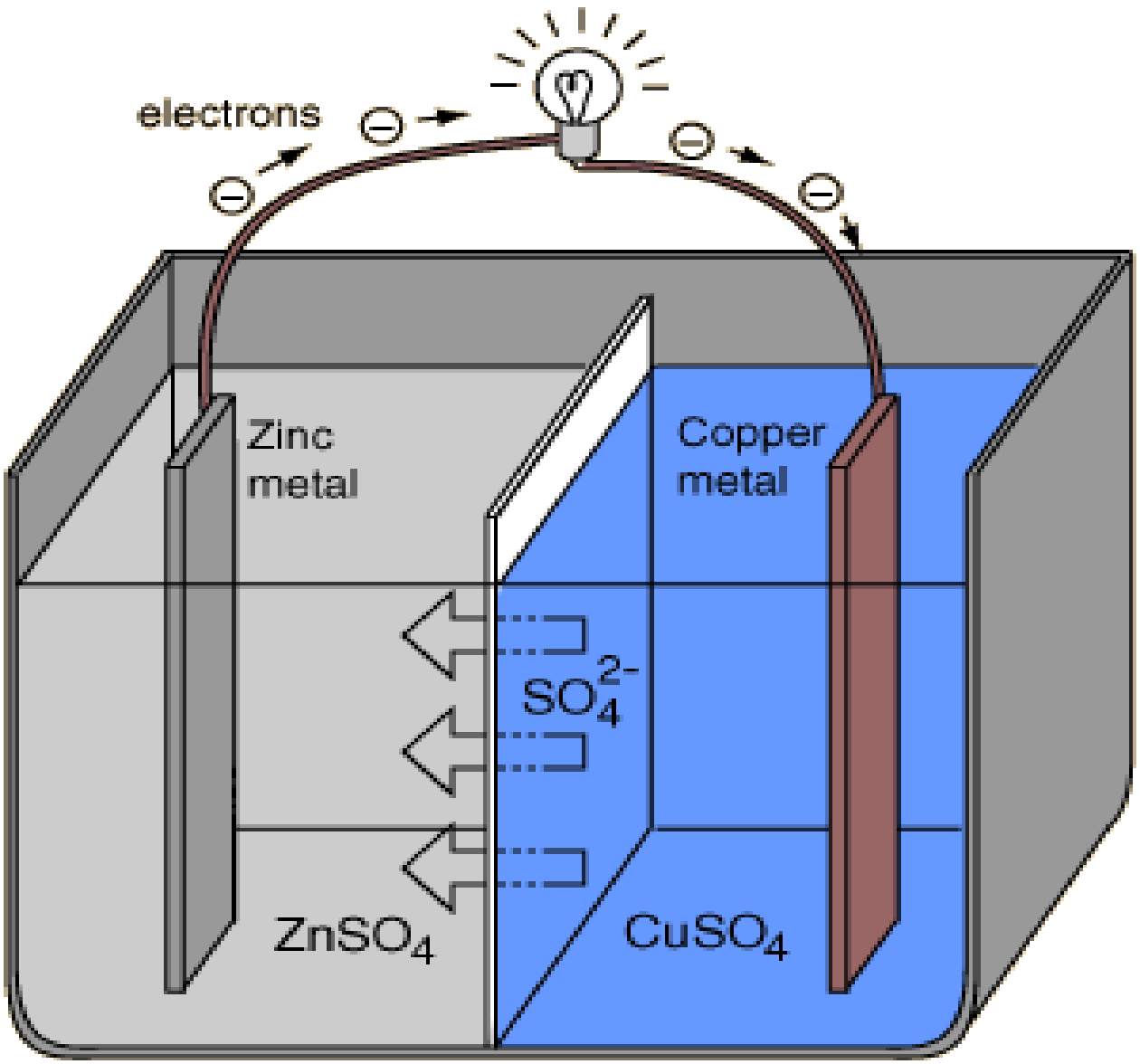

Galvanic cell (also called voltaic cell) uses chemical reaction to produce electrical energy (flow of electrons). The *Galvanic cell* consists of two different metals connected by a *salt bridge* or a porous disk between the individual half-cells.

Figure 1: Schematic of Zn-Cu galvanic cell

1. The equation for the cell

Oxidation half-reaction:

$$Zn\ (s) \longrightarrow Zn^{2+} + 2\ e^{-}$$

The terminal at which oxidation occurs is called the "***anode***". For a battery, this is the negative terminal.

Reduction half-reaction:

$$Cu^{2+}\ (aq) + 2\ e^{-} \longrightarrow Cu\ (s)$$

The terminal at which reduction occurs is called the "***cathode***". For a battery, this is the positive terminal.

Overall reaction:

$$Zn\ (s) + Cu^{2+}\ (aq) \longrightarrow Cu\ (s) + Zn^{2+}\ (aq)$$

Exercise 1

1. The mass of the zinc electrode decreases as reaction proceeds. Explain.
2. The mass of the cupper electrode increases as reaction proceeds. Explain.
3. How does the galvanic cell continue producing an external electric current?
4. What is the purpose of the salt bridge?
5. Suppose the concentration of the $CuSO_4$ solutions is maintained throughout constantly. Will the cell continue producing an external current? Explain.
6. The salt bridge or porous membrane is designed such that the cations are prevented from moving between the electrodes. What can happen if the cations are allowed to move between electrodes?
7. Write the shorthand notation for this cell.

2. The cell voltage

The ***standard cell emf*** is the difference in the standard electrode potentials of the two half-reactions and is calculated from the equation:

$$E_{cell} = E_{cathode} - E_{anode}$$

For the cell:

$$Zn(s) \,|\, Zn^{2+}(aq) \,||\, Cu^{2+}(aq) \,|\, Cu\,(s)$$

Exercise 2

1. **Calculate the cell emf for the above cell.**
2. **Why is it easier for Zn electrode and not Cu electrode to loose electrons?**

3. The energy stored in the cell

Clearly, to get energy from the cell, you must get more energy released from the oxidation of the zinc than it takes to reduce the copper.

The energy yield from a voltaic cell is given by the cell voltage times the number of moles of electrons transferred times the Faraday constant.

Electrical energy output = n x F x E_{cell}

= n x N_A x q_e x E_{cell} (E_{cel} = V)

$F = N_A q_e$

$N_A = 6.022 \times 10^{23}\ mol^{-1}$

$q_e = 1.602 \times 10^{-19}$ C)

The energy released in the oxidation process is equal to work done (W) in moving the electrons in the external circuit.

The work done in moving the electrons through the external circuit is given by

$$W = V \times q_e$$

The cell can yield a finite amount of energy from this process, the process being limited by the amount of material available either in the electrolyte or in the metal electrodes.

The above equation then becomes

$$W = n \times N_A \times V \times q_e$$

Exercise 1

Suppose the were 1 mole of SO_4 ions on the copper side.

- **How many moles of electrons will be transferred in the external circuit?**
- **Calculate the amount of energy released by the cell.**

Summary

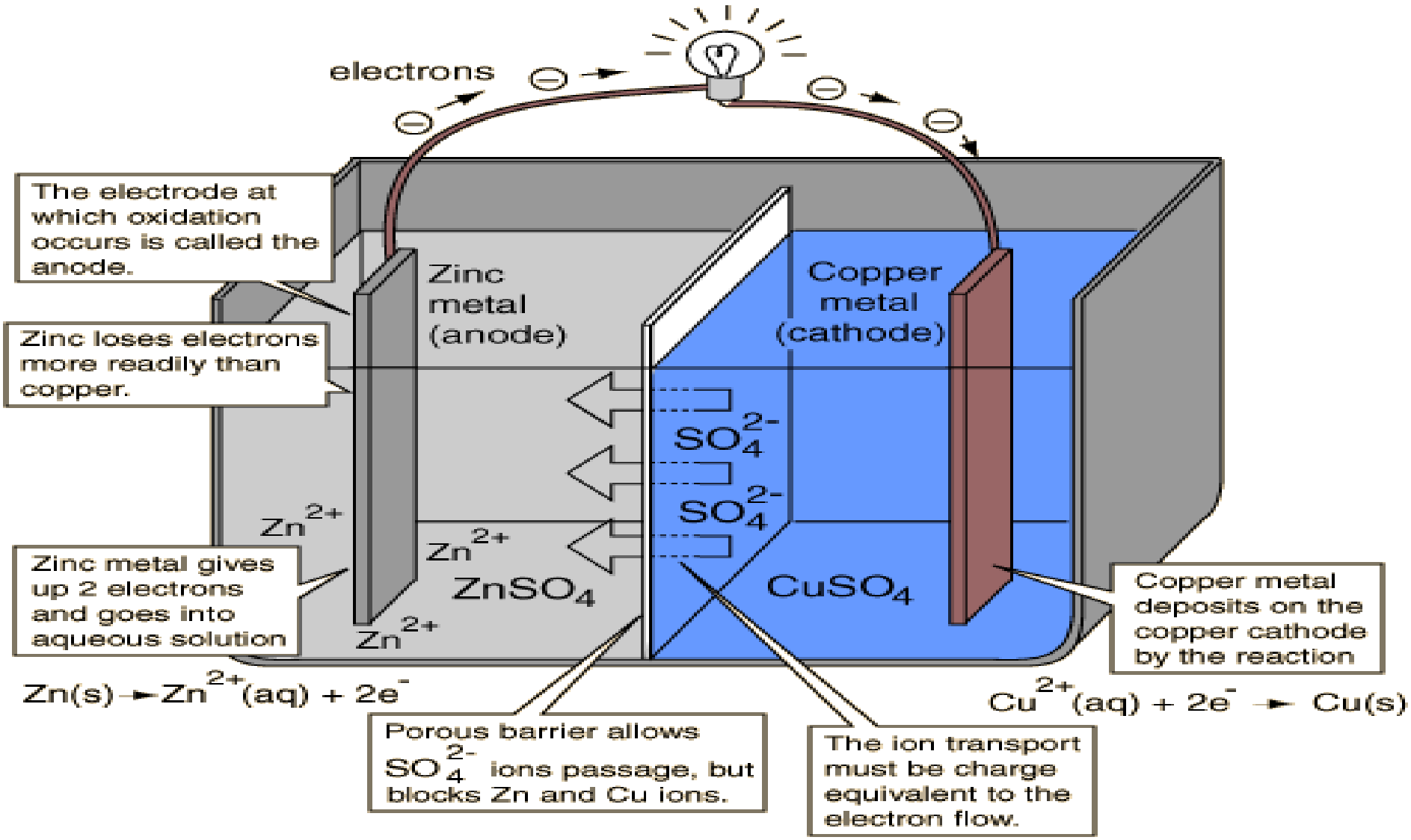

Figure 2: Schematic of Zn-Cu galvanic cell 2

4. Cell capacity

As a zinc atom provides the electrons, it becomes a positive ion and goes into aqueous solution, decreasing the mass of the zinc electrode. In this way the ***anode*** is **consumed** or **corroded**. When the anode material corrodes entirely away, the cell's potential drops and the current halts. The metal may be regarded as the ***fuel*** that powers the device. A similar process is used in electroplating. The ionic current in the electrolyte is equal to the current in the external circuit, so a complete circuit is formed with a path through the electrolyte.

A term used to tell the amount of energy a battery has before it needs to be recharged. Is called ***Capacity*** of a battery. Ampere-Hours, or amp-hrs is a current of one amp flowing for one hour.

The ***Capacity*** of the battery is actually a measure of the battery voltage (q), which is related to the amount of electricity (I) that can be produced over some period (t). This relationship is given by the following equation:

$$q = I t$$

Primary cells and secondary cells

Batteries are usually divided into two broad classes:

Primary batteries irreversibly (within limits of practicality) transform chemical energy to electrical energy. When the initial supply of reactants is exhausted, energy cannot be readily restored to the battery by electrical means.

Secondary batteries can be recharged; that is, they can have their chemical reactions reversed by supplying electrical energy to the cell, restoring their original composition

Lithium-ion battery and NiCd battery

The most widely used Lithium-ion batteries have a positive electrode made from cobalt or manganese oxide and a negative electrode made from graphite. The electrolyte (the material through which the ions pass from one electrode to the other) is a lithium-based gel or polymer.

A fully charged NiCd cell contains:

- a ***nickel hydroxide*** positive ***electrode plate***.
- a ***cadmium*** negative electrode plate.
- a ***separator***.

and an ***alkaline electrolyte*** (**potassium hydroxide**).

1. Cell emf and electrochemical reactions

The high cell voltage of 3.6 volts allows battery pack designs with only one cell. Most of today's mobile phones run on a single cell. A nickel-based pack would require three 1.2-volt cells connected in series.

The chemical reactions in a Lithium-ion cell is illustrated by the following equations:

Positive electrode: $LiCoO_2 \underset{\text{Discharge}}{\overset{\text{Charge}}{\rightleftharpoons}} Li_{1-x}CoO_2 + xLi^+ + xe^-$

Negative electrode: $C + xLi^+ + xe^- \underset{\text{Discharge}}{\overset{\text{Charge}}{\rightleftharpoons}} CLi_x$

Battery as a whole: $LiCoO_2 + C \underset{\text{Discharge}}{\overset{\text{Charge}}{\rightleftharpoons}} Li_{1-x}CoO_2 + CLi_x$

The chemical reactions in a NiCd cell is illustrated by the following equations:

$$Cd + 2\,H_2O + 2\,NiOOH \longrightarrow 2\,Ni(OH)_2 + Cd(OH)_2$$

The alkaline electrolyte (commonly KOH) is not consumed in this reaction and therefore its *Specific Gravity*, unlike in Lead- Acid batteries, is not a guide to its state of charge.

In the case of NiCds, there are two possible results of overcharging:

•If the *anode* is overcharged, *hydrogen* gas is produced

If the *cathode* is overcharged, *oxygen* gas is produced.

Application

Lithium-ion is a low maintenance battery, an advantage that most other chemistries cannot claim. There is no memory and no scheduled cycling is required to prolong the battery's life. In addition, the self-discharge is less than half compared to nickel-cadmium, making lithium-ion well suited for modern fuel gauge applications.

2. Internal resistance and distance between electrodes (Lithium-ion cell)

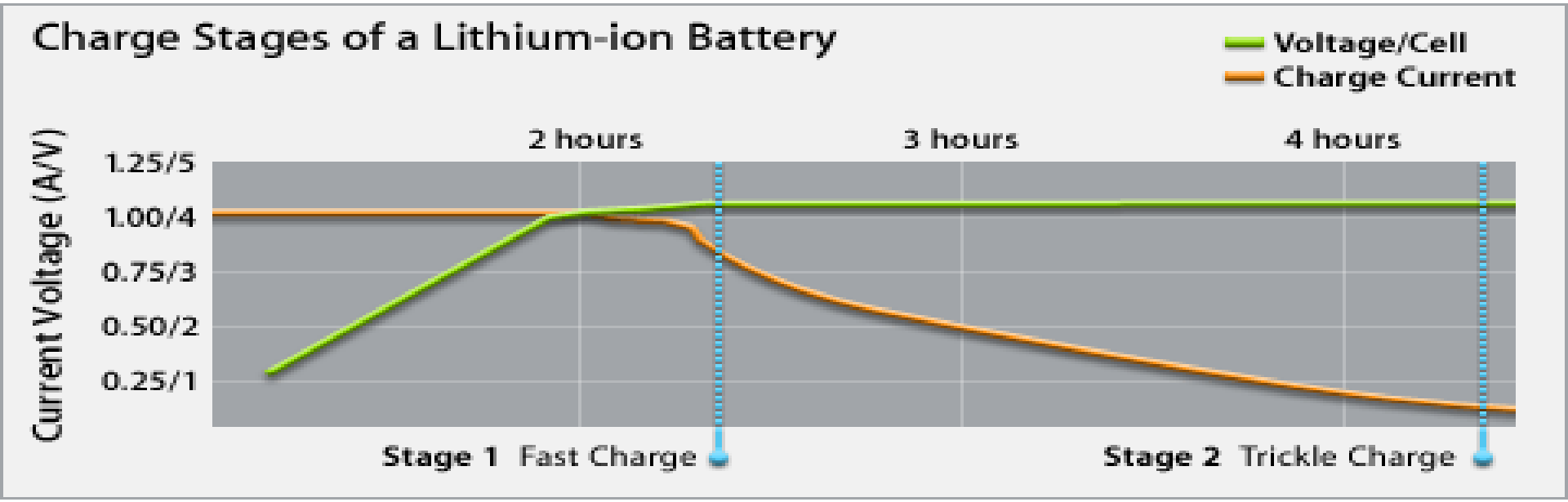

Figure 3: Schematic of charge stages of a Lithium-ion battery

Protection circuit function:

1. Overcharge protection

Stops charging when the voltage exceeds the specified maximum value in order to prevent the battery from overheating or exploding due to overcharging.

2. Overdischarge protection

Stops discharging when the voltage falls below the specified minimum value in order to prevent degradation of the battery due to overdischarging.

3. Overcurrent protection

Stops discharging when an abnormal current (several amps or more) flows in the battery due to a fault in the device.

4. Short-circuit protection

Promptly stops discharging when a large current of several tens of amps flows due to external shorting of the battery pack (etc.).

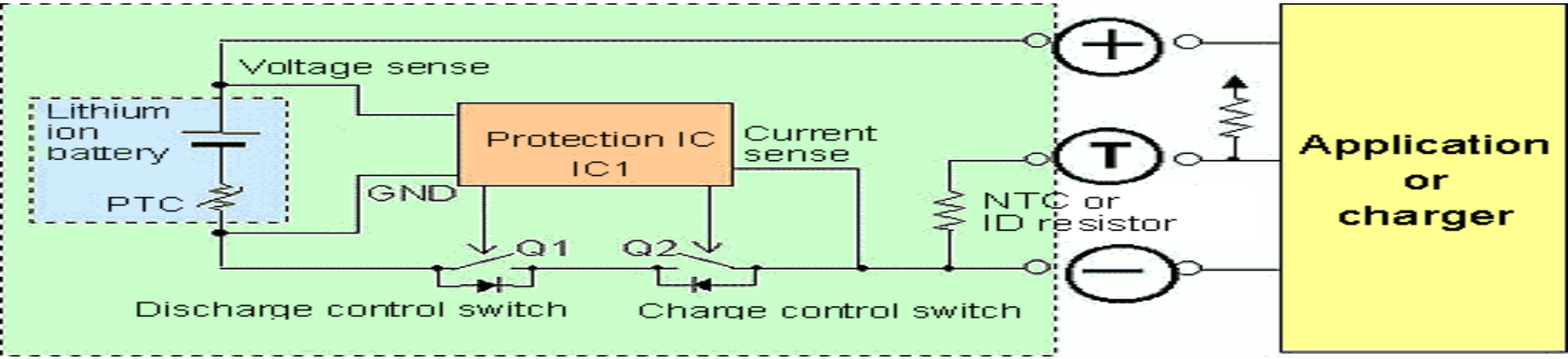

Figure 4: Block diagram of protection circuit of a Lithium-ion battery

Lead acid battery

Lead-acid batteries are composed of a Lead-dioxide cathode, a sponge metallic Lead anode and a Sulphuric acid solution electrolyte. This heavy metal element makes them toxic and improper disposal can be hazardous to the environment.

The positive plates (anodes) are made of lead dioxide (PbO_2). The negative plates (cathodes) are made of lead (Pb). The electrolyte is a dilute solution of 35% sulfuric acid (H_2SO_4) and 65% distilled water.

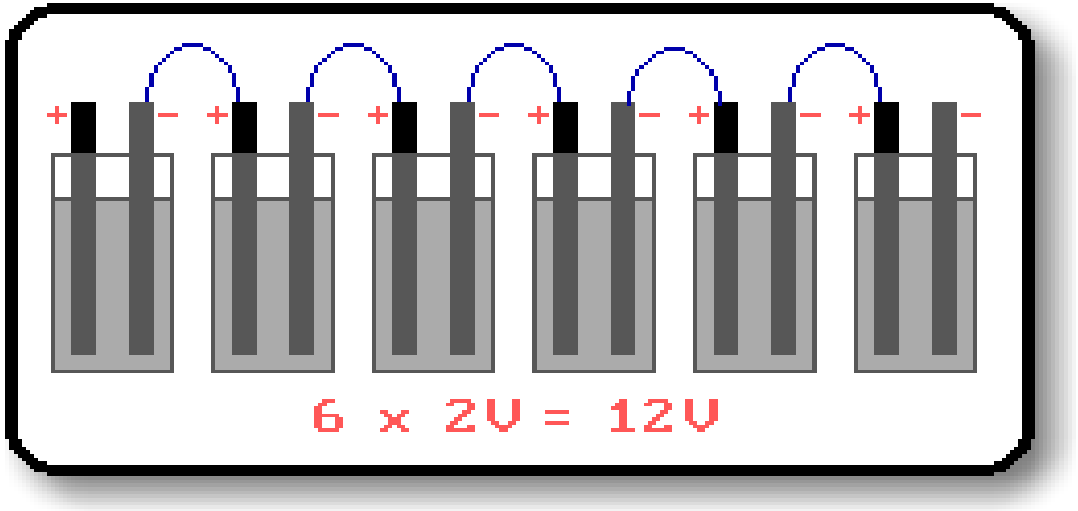

Figure 5: Schematic of a Lead acid battery

1. Cell emf and electrochemical reactions

The battery consists of 6 cells connected in series, each cell having an emf of about 2 V, giving 12 V as the overall emf of the battery

2. Internal resistance and distance between electrodes

Separators are used between the positive and negative plates of a lead acid battery to prevent short circuit through physical contact, mostly through *dendrites* ('treeing'), but also through shedding of the active material.

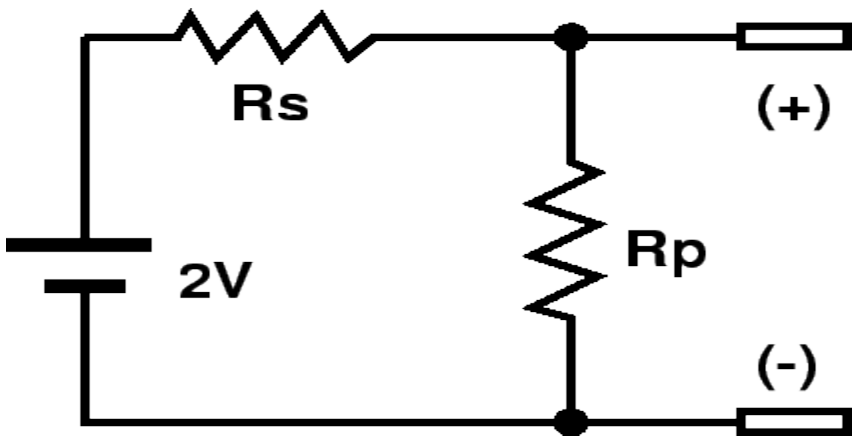

Figure 6: Lead acid battery model

- wood
- rubber
- cellulose
- sintered PVC
- glass fiber mat
- microporous PVC/polyethylene.

Separators obstruct the flow of ions between the plates and increase the internal resistance of the cell.

3. Cell capacity

The ***amount* of *lead*** in a cell determines its *capacity* to deliver power to a load. ***Capacity*** is usually specified in Amp-hours, that is, ***capacity*** is the ability of a battery to supply a specified number of Amps for a given number of hours. A battery generates ***voltage*** by an ***electrochemical reaction*** between the ***positive*** and ***negative*** plates and an ***electrolyte***. ***Current*** may be drawn from the battery as long as the ***electrochemical reaction*** continues.

4. Cell emf and the electrochemical reaction during the discharge and recharge cycles

Lead acid batteries should never be run flat. The maximum recommended discharge is 75% of the total. This means that the battery should have a minimum of 25% of charge remaining when it is put on charge.

Lead acid batteries once filled with electrolyte, should always be regularly charged even if they are not in use. When left idle a filled battery will self discharge because of its own internal resistance. left long enough a battery can go completely flat without ever having been put into service.

The chemical reactions are (charged to discharged):

Anode (oxidation): $Pb(s) + HSO_4^-(aq) + H_2O(l) \longrightarrow PbSO_4(s) + H_3O^+(aq) + 2\,e^-$

Cathode (reduction): $PbO_2(s) + 3\,H_3O^+(aq) + HSO_4^- + 2\,e^- \longrightarrow PbSO_4(s)$

Overall reaction: $Pb(s) + PbO_2 + 2\,HSO_4^-(aq) + 2\,H_3O^+(aq) + H_2O(l) \longrightarrow 2\,PbSO_4(s)$

Caution!

Because of the open cells with liquid electrolyte in most lead-acid batteries, ***overcharging*** with excessive charging voltages will generate ***oxygen*** and ***hydrogen*** gas by ***electrolysis of water***, forming an ***explosive mix***. This should be avoided.

Zinc-carbon dry cell (Leclanché)

The dry cell is an example of a primary cell, as once it is discharged it cannot be recharged, and must be discarded.

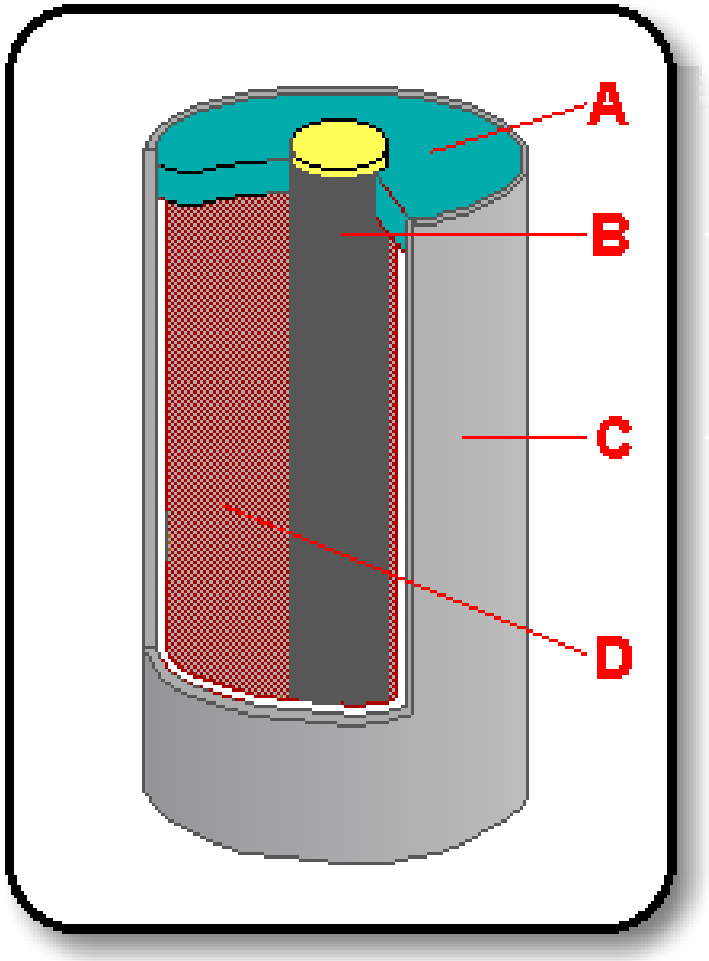

Figure 7: Schematic of a Zinc-carbon dry cell

The top of the battery is closed with a non-conducting sealing material (A).

The cathode consists of a graphite (carbon) rod (B)(tipped with a metal contact), which serves as the positive pole of the battery.

The anode is a cylindrical zinc casing (C) (the bottom of the battery is normally exposed and serves as the negative pole).

The battery is filled with a mixture of manganese dioxide (MnO_2) as oxidant, ammonium chloride (NH_4Cl) as a source of H^+ ions, and zinc chloride ($ZnCl_2$) (D). These two salts serve as electrolytes.

1. Cell emf and the electrochemical reaction

The **dry cell**, invented in 1867 by the French engineer Georges Leclanché (1839 - 1889), is widely used as a source of electric energy in ***electric torches*** and small appliances such as ***transistor radios***. It makes use of the two reactions, which (in a simplified form) may be described as

Anode (oxidation): $Zn \longrightarrow Zn^{2+} + 2\,e^{-}$ ($E_{oxidation}$ = -0.76 V)

Cathode (reduction): $Mn^{4+} + e^{-} \longrightarrow Mn^{3+}$ ($E_{reduction}$ = ca. 1.00 V)

The manganese is supplied as manganese dioxide, and the actual cathode reaction taking place is

$$2\,MnO_2 + 2\,H^{+} + 2\,e^{-} \longrightarrow Mn_2O_3 + H_2O$$

Overall reaction: $Zn + 2\,MnO_2 + 2\,H^{+} \longrightarrow Mn_2O_3 + Zn^{2+} + H_2O$

Exercises

1. Calculate the cell voltage for the zinc-carbon dry cell above.
2. The H^+ ions are in turn provided by ammonium ions NH_4^+, through the reaction . Write the reaction equation for the dissociation of NH_4^+ ion.

Activity 1: Lemon Experiment

Materials: 18 gauge copper wire

paper clips

multitester

small flashlight bulb

lemons

wire cutters

Procedure:

- **Roll a lemon to get juice moving inside.**
- **Straighten a paperclip.**
- **Inset a paper clip about an inch into the lemon.**
- **Inset a 6 inch piece of 18 gauge copper wire about an inch into the lemon (Make sure that the two metals are not touching inside the lemon.**
- **Attach the lemon wires to the multitester wires and check for the reading.**
- **If the lemon passes the test by producing a reading, try attaching the lemon wires to the metal base of a light bulb.**
- **If the light bulb doesn’t light, prepare more lemons as in step 1 – 3, and attach lemons to each other by stringing them in a series copper to copper and paperclip to paperclip.**
- **Try the multitester again with the series of lemons.**
- **Try step 4 again.**
- **The light bulb doesn’t always light, so don’t get frustrated.**

Activity 2: Voltaic Pile

Materials: 5 cents
5 dimes
multitester
paper towel
lemon juice

Procedure:

- **Cut 10 paper towel pieces, 1 x 1 inches square.**
- **Wet paper towel with lemon juice.**
- **Make a stack by sandwiching a dime, a paper towel piece, a cent and repeat until all coins are used up. This is known as a voltaic pile.**
- **Place wires on the multitester on either end of the stack. If there is no reading on the multitester, reverse the wires.**

Questions

1. **What do these two experiments have in common?**
2. **Which electrodes are the anode, and which are the cathode?**
3. **What forms the electrolyte in both experiments?**
4. **Suppose a potato was used instead of a lemon. Why do you think you need more potatoes than lemons to light up the light bulb (LED)?**

Summary

- You have learnt to:
  - Know when to use which batteries
  - Know the different parts that make up a battery
  - Understand why and how lead-acid batteries are recycled
  - Write the cell reactions in the main types of batteries
- Feedback from participants is highly appreciated to enable the presenter to improve course material and the presentation.